FAMCO
هایپرصنعت

AC Single Phase Capacitor Operated Motors

NCP76 Series (Output: 15~25W Approx.)

Brief Introduction :

1. The rated voltage can be from 100V to 240VAC. The frequency can be either 50Hz, or 60Hz, or 50/60Hz.
2. The motor can be made of 2 poles, 4 poles, 6 poles, etc as needed. Single speed, 2 speeds, 3 speeds or 4 speeds are all available.
3. The standard shaft diameter (d) is Ø8mm. It can be others, and with D-cuts, threads, etc.. Its length (L2) can be any as needed.
4. The stator height (H) can be any from 20mm to 50mm.
5. The bearing brackets (housing) can be made either by steel sheet or by zinc-aluminum alloy, with or without a mounting flange.
6. The rotor bearings can be of either sleeve bearings (bush) or ball bearings as needed to reach different lifetime.
7. The motor rotation can be either in CW or CCW direction as needed.
8. RoHS compliant is available.
9. The motor is CCC certified. **Certificate No.: 2017010401996939.**

Typical Application :

These motors are mainly used for Ventilators, Exhausters, Air-purifiers, Table Fans, Desk Fans, Floor Fans, Wall Fans, Box Fans, etc.

Outline Dimensions (All dimensions in millimeter) :

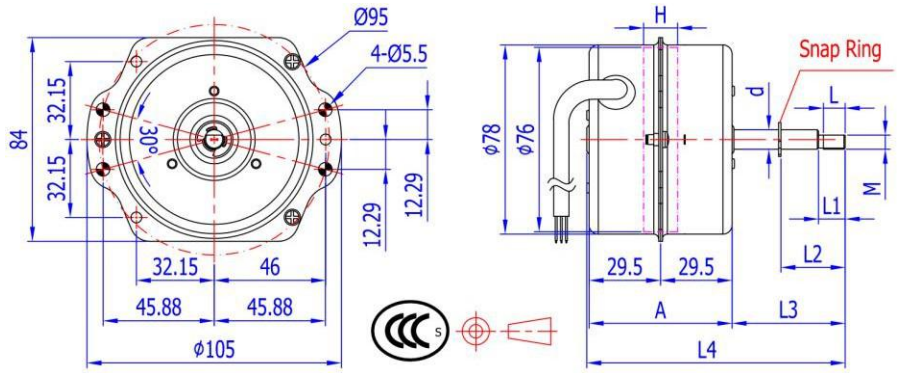

NCP7614M with metal sheet cover

Indication of the above letters (can be changed as needed): H=14mm, stator height
A=59mm, motor housing total height, will be different by different stator height
L: thread length L1: D-cut part length L2: snap ring position Length
d: shaft diameter L3: shaft extended length L4: motor total length M=M8, thread size

Technical Performances (tested under room temperature) :

Specs / Model	Stack Height	Number of Poles	Rated Power	Rated Supply		@ No Load			On Load			@ Stall	
				Volt.	Freq.	Current	Input P.	Speed	Current	Input P.	Speed	Current	Input P.
	(mm)	----	(Watts)	(VAC)	(Hz)	(Amp)	(Watts)	(rpm)	(Amp)	(Watts)	(rpm)	(Amp)	(Watts)
NCP7611S-001	11	4P	4										
NCP7614S-001	14	4P	4	220	50	0.13	29	1420	0.16	34	1300		
NCP7614S-002			6										
NCP7616S-001	16	4P	5										
NCP7616S-002			7										
NCP7618S-001	18	4P	7										
NCP7618S-002			9										
NCP7620S-001	20	4P	9										
NCP7620S-002			11										

Remarks: This catalog listed just some typical models. The performances as above are just for reference only. We can adjust our motor specifications according to what the customer needs. OEM & ODM are both welcome.

www.famcocorp.com
E-mail: info@famcocorp.com
@famco_group
Tel:۰۲۱- ۴ ۸ ۰ ۰ ۰ ۰ ۴ ۹
Fax:۰۲۱ - ۴۴۹۹۴۶۴۲
تهران، کیلومتر ۲۱ بزرگراه لشگری (جاده مخصوص کرج)
روبروی پالایشگاه نفت پارس، پلاک ۱۲