NEW ERA SLG

系列三相无刷同步发电机
SERIES THREE-PHASE BRUSHLESS
SYNCHRONOUS ALTERNATOR

FAMCO
Fanavaran Aria Mehvar Co

SLG 164
TECHNICAL DATA SHEET

50Hz CLASS "H"

RATINGS	绕组形式 311 / 功率因数0.8 Winding 311 / 0.8 Power Factor														绕组形式05 Winding 05			
定额/温升/环温T° Duty / Temp Rise / Ambient T°	持续/125k/40℃ Cont./125K/40℃								持续/125k/40℃ Cont./125K/40℃						持续/125k/40℃ Cont./125K/40℃			
相数 PHASE	三相 3 PHASE								单相 1 PHASE						单相 1 PHASE			
星形串联 SERIES STAR	380		400		415		440								Power Factor			
星形并联 PARALLEL STAR	190		200		208		220								0.8		1	
三角形串联 SERIES DELTA	220		230		240		254											
双三角形并联 DOUBLE DELTA									220		230		240		220,230,240			
	KVA	KW	KVA	KW	KVA	KW	KVA	KW	KVA	KW	KVA	KW	KVA	KW	KVA	KW	KVA	KW
SLG164A	8.1	6.5	8.1	6.5	8.1	6.5	6.2	5	4.7	3.8	4.7	3.8	4.7	3.8	5.4	4.3	6.8	6.8
SLG164B	11	8.8	11	8.8	11	8.8	8.4	6.7	6.4	5.1	6.4	5.1	6.4	5.1	7.4	5.9	8.4	8.4
SLG164C	13.5	10.8	13.5	10.8	13.5	10.8	11	8.8	7.8	6.2	7.8	6.2	7.8	6.2	9.0	7.2	11.0	11.0
SLG164D	16	12.8	16	12.8	16	12.8	13.5	10.8	9.3	7.4	9.3	7.4	9.3	7.4	10.8	8.6	13	13

60Hz CLASS "H"

RATINGS	绕组形式 311 / 功率因数0.8 Winding 311 / 0.8 Power Factor														绕组形式05 Winding 05			
定额/温升/环温T° Duty / Temp Rise / Ambient T°	持续/125k/40℃ Cont./125K/40℃								持续/125k/40℃ Cont./125K/40℃						持续/125k/40℃ Cont./125K/40℃			
相数 PHASE	三相 3 PHASE								单相 1 PHASE						单相 1 PHASE			
星形串联 SERIES STAR	416		440		460		480								Power Factor			
星形并联 PARALLEL STAR	208		220		230		240								0.8		1	
三角形串联 SERIES DELTA	240		254		266		277											
双三角形并联 DOUBLE DELTA									220		230		240		220,230,240			
	KVA	KW	KVA	KW	KVA	KW	KVA	KW	KVA	KW	KVA	KW	KVA	KW	KVA	KW	KVA	KW
SLG164A	9.6	7.7	10.2	8.2	10.2	8.2	10.2	8.2	5.1	4.1	5.4	4.3	5.6	4.5	6.4	5.1	8.2	8.2
SLG164B	13	10.4	13.8	11	13.8	11	13.8	11	6.9	5.5	7.2	5.8	7.5	6	8.8	7.0	11.0	11.0
SLG164C	16	12.8	16.9	13.5	16.9	13.5	16.9	13.5	8.5	6.8	8.9	7.1	9.3	7.4	10.8	8.6	13.5	13.5
SLG164D	18.9	15.1	20	16	20	16	20	16	10	8	10.5	8.4	11	8.8	13.5	10.8	16.5	16.5

SLG164 外形图 External dimension

单轴承 SINGLE BEARING

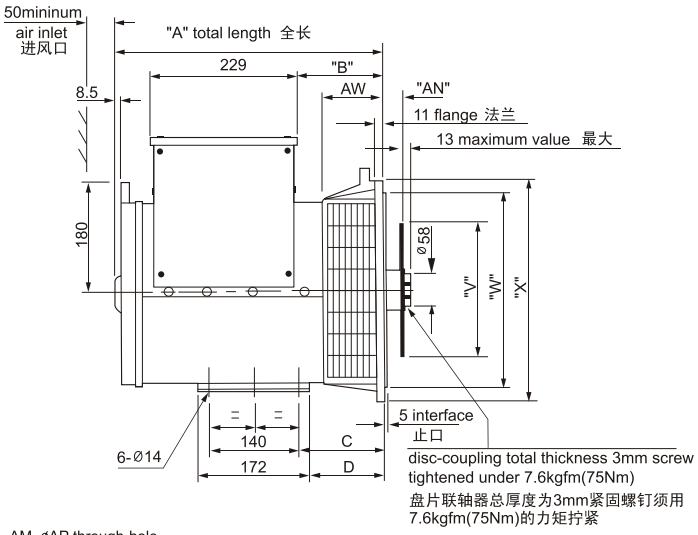

双轴承 DOUBLE BEARING

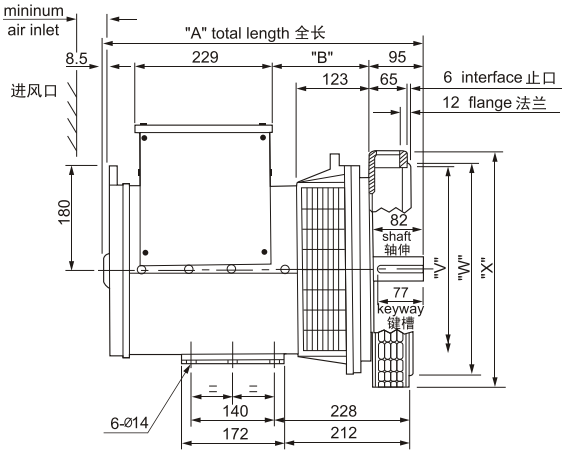

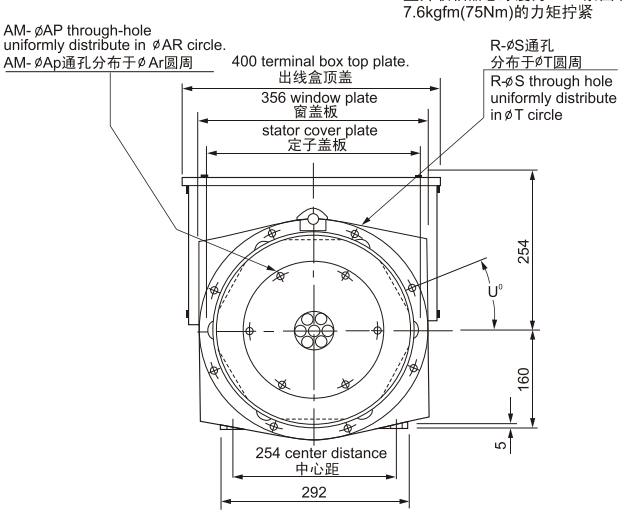

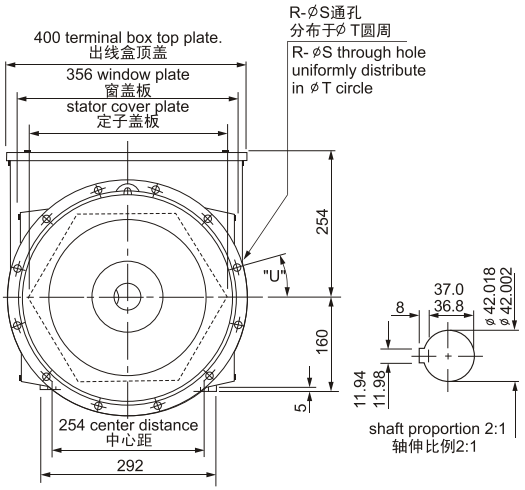

DIMENSION 尺寸(mm)

型号 Model	A			B			N.W (kg)	G.W (kg)	LXWXH (mm)
	SAE3/5	SAE4	SAE6	SAE3/5	SAE4	SAE6			
SLG164A	403.5	391.5	435.2	119.5	107	151.2	85	95	515X485X620
SLG164B	403.5	391.5	435.2	119.5	107	151.2	90	102	515X485X620
SLG164C	403.5	391.5	435.2	119.5	107	151.2	96	110	515X485X620
SLG164D	403.5	391.5	435.2	119.5	107	151.2	99	116	515X485X620

DIMENSION 尺寸(mm)

型号 Model	A	B	N.W(kg)	G.W(kg)	LXWXH(mm)
SLG164A	511.5	137	91	101	565X485X620
SLG164B	511.5	137	98	108	565X485X620
SLG164C	511.5	137	106	116	565X485X620
SLG164D	511.5	137	112	122	565X485X620

FLANGE 法兰式过渡接套 (mm)

S.A.E.NO.	AW	R	S	T	U°	W	X	C	D
3	105	8	11	428.6	15	409.5	451	145	129
4	93	8	11	381.0	15	361.9	402	133	117
5	105	8	11	333.3	22.5	314.3	356	145	129
6*	136.7	8	11	285.8	22.5	266.7	308	176.7	160.7

FLANGE 法兰式过渡接套 (mm)

S.A.E.NO.	R	S	T	U°	V	W	X
3	12	11	428.6	15	396	409.5	451
4	12	11	381.0	15	352	361.9	403
5	8	11	333.3	22.5	301	314.3	356

DISC COUPLING 盘片式联轴器(mm)

S.A.E.NO.	AN	AM	AP	AR	V
6.5	30.16	6	8.7	200.0	215.8
7.5	30.16	8	8.7	222.2	241.2
8	61.9	6	11	244.5	263.4
10	53.98	8	11	295.3	314.2

SINGLE BEARING SAE NO SELECTOR 单轴承驱动片和过渡法兰配套表

	SAE 6.5	SAE 7.5	SAE 8	SAE 10	SAE 11.5
SAE 3	●	●		●	●
SAE 4		●	●	●	
SAE 5	●	●			
SAE 6	●				

注:*SAE6需在SAE5的盖另加一厚31.7mm的过渡板,故"A"尺寸也相应增加31.7mm
*SAE3的8个孔分布于12等分圆周上。
Note:* "A" dimension should extend 31.77mm corresponding to an additional spacer plate added on SAE6.
* 8 holes of SAE3 uniformly distribute on the circle spaced as 12.