# PU Series 5/2, 5/3 Way Pilot Solenoid Valve

## Features

1. Medium size and large flow rate.
2. Lockable manual override for easy operation.
3. Aluminum body with surface anodizing treatment and strict quality control for long durability.
4. Coil nut is available, please refer to page 5-1.

## How to order

| PU520 | X | — | 02 | N | — | S | 2 | — | L | E1 |
|---|---|---|---|---|---|---|---|---|---|---|
| 520:5/2 Way<br>530:5/3 Way | Acting style | | Port size | Thread | | Solenoid | Voltage | | Led | Coil type |
| | Blank:Standard<br>5/3 Way<br>Blank:Closed center<br>X:Exhaust center<br>Y:Pressurized center | | 01:1/8"(option)<br>02:1/4"<br>03:3/8"<br>04:1/2" | Blank:G<br>N :NPT<br>R :Rc | | S:Single solenoid<br>D:Double solenoid | 1:110VAC<br>2:220VAC<br>6:24VAC<br>7:12VDC<br>9:24VDC | | Blank:W/O LED<br>L :W/I LED | Blank:DIN<br>F :Lead wire<br>E1:EX-proof 22mm width<br>E2:EX-proof 30mm width<br>E3:EX-proof CSA standard |

* Please refer to page 5-10 for the details of ex-proof coil.

## How to order manifold

| MF520 | — | 02 | N | 02 |
|---|---|---|---|---|
| | | Port size | Thread | Stations |
| | | 02:1/4"<br>03:3/8"<br>04:1/2" | Blank:G<br>N :NPT<br>R :Rc | 02 :2 Stations<br>03 :3 Stations<br>XX :XX Stations |

## Specifications

| Model | PU520-02-S(D) | PU530-02-D | PU520-03-S(D) | PU530-03-D | PU520-04-S(D) | PU530-04-D |
|---|---|---|---|---|---|---|
| Port size | 1/4", 1/8" (Exhaust ports) | | 3/8" | | 1/2" | |
| Body material | Aluminum alloy | | | | | |
| Fluid | Compressed air | | | | | |
| Effective area | 18mm² | 14mm² | 35mm² | 32mm² | 70mm² | 54mm² |
| Acting | Internal pilot | | | | | |
| Operating pressure range | 1.5~8 kgf/cm² | 2~8 kgf/cm² | 1.5~8 kgf/cm² | | 2~8 kgf/cm² | |
| Proof pressure | 9.9 kgf/cm² | | | | | |
| Ambient temperature | -10℃ ~ 60℃ | | | | | |
| Duty cycle | 100% ED | | | | | |
| Coil type | DIN (Standard) | | | | | |
| Protection class | IP65 (DIN 40 050) | | | | | |
| Insulation class | F | | | | | |
| Voltage tolerance | ±10% | | | | | |
| Standard voltage | 220VAC, 110VAC, 24VDC (The other voltage is optional) | | | | | |
| Net weight | 270g / 335g | 475g | 430g / 525g | 715g | 665g / 770g | 1045g |



## Dimensions

PU520-02-S

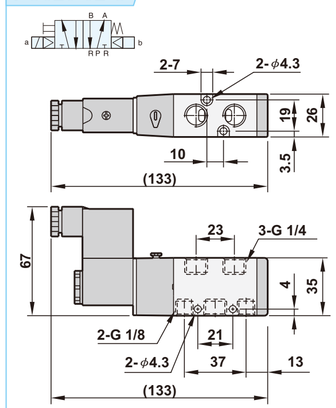


PU520-03-S

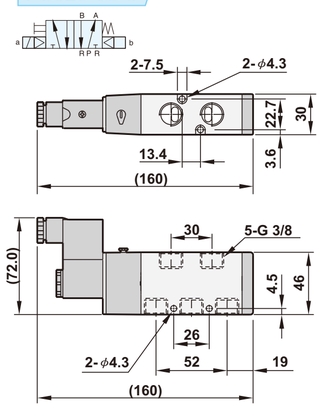


PU520-04-S

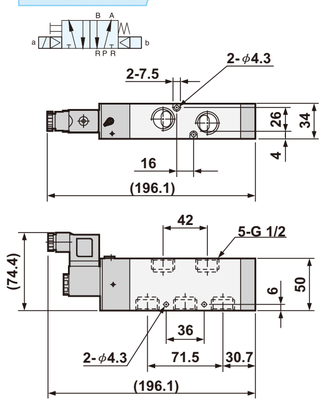


PU520-02-D

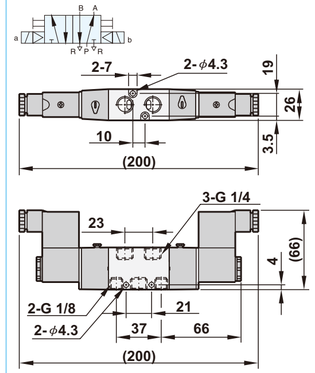


PU520-03-D

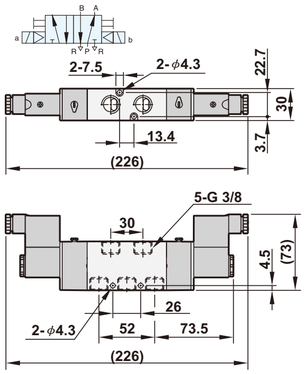


PU520-04-D

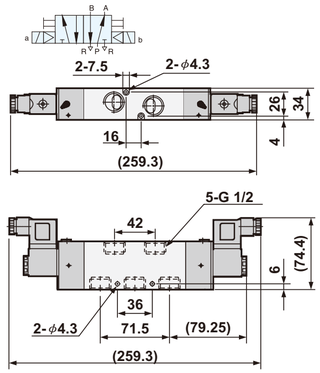


PU530(X)(Y)-02-D

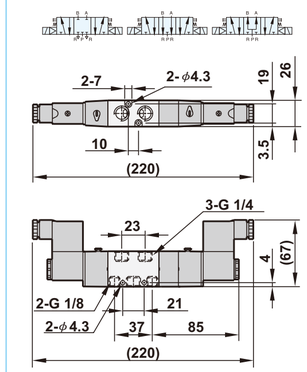


PU530(X)(Y)-03-D

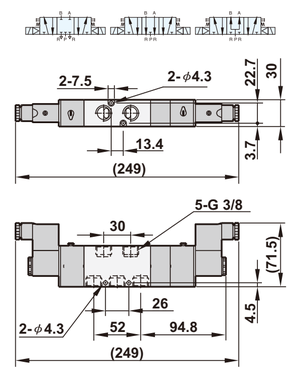


PU530(X)(Y)-04-D

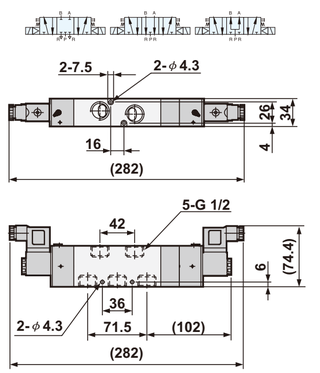






www.famcocorp.com
E-mail: info@famcocorp.com
@famco_group
Tel:۰۲۱- ۴ ۸ ۰ ۰ ۰ ۰ ۴ ۹
Fax :۰۲۱ - ۴۴۹۹۴۶۴۲
تهران، کیلومتر۲۱ بزرگراه لشگری (جاده مخصوص کرج)
روبـروی پالایشگاه نفت پارس، پلاک ۱۲

FAMCO
هایپرصنعت



## Dimensions

### MF520-0207

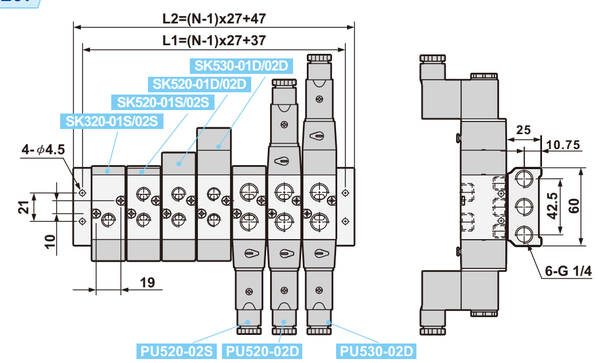


| Number of station (N) | L1 | L2 |
|---|---|---|
| 2 | 64 | 74 |
| 3 | 91 | 101 |
| 4 | 118 | 128 |
| 5 | 145 | 155 |
| 6 | 172 | 182 |
| 7 | 199 | 209 |
| 8 | 226 | 236 |
| 9 | 253 | 263 |
| 10 | 280 | 290 |

### MF520-0307

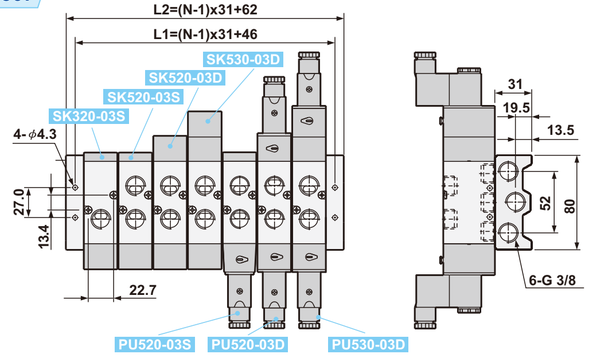


| Number of station (N) | L1 | L2 |
|---|---|---|
| 2 | 77 | 93 |
| 3 | 108 | 124 |
| 4 | 139 | 155 |
| 5 | 170 | 186 |
| 6 | 201 | 217 |
| 7 | 232 | 248 |
| 8 | 263 | 279 |
| 9 | 294 | 310 |
| 10 | 325 | 341 |

### MF520-0407

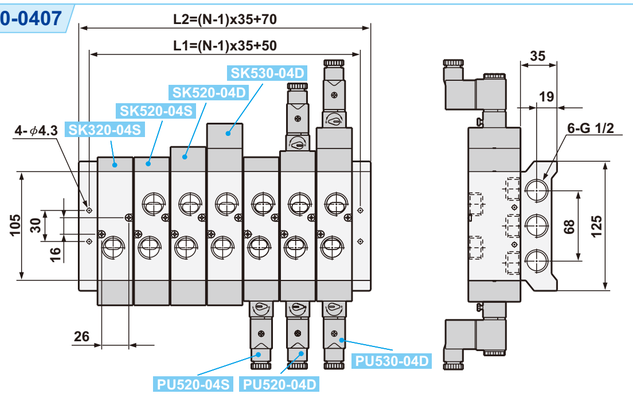


| Number of station (N) | L1 | L2 |
|---|---|---|
| 2 | 85 | 105 |
| 3 | 120 | 140 |
| 4 | 155 | 175 |
| 5 | 190 | 210 |
| 6 | 225 | 245 |
| 7 | 260 | 280 |
| 8 | 295 | 315 |
| 9 | 330 | 350 |
| 10 | 365 | 385 |



## Flow chart

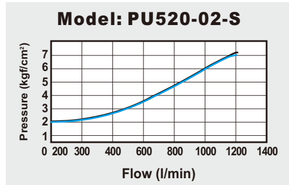


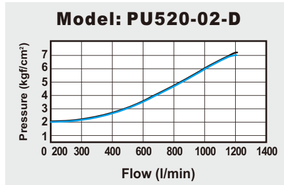


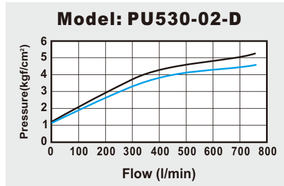


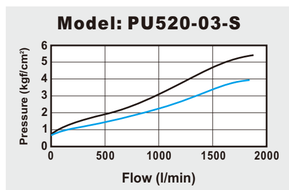


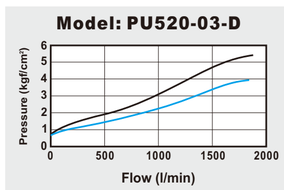


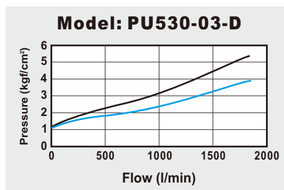


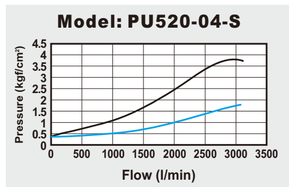


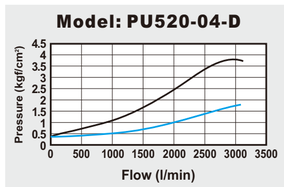


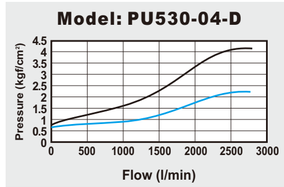


## Explosion

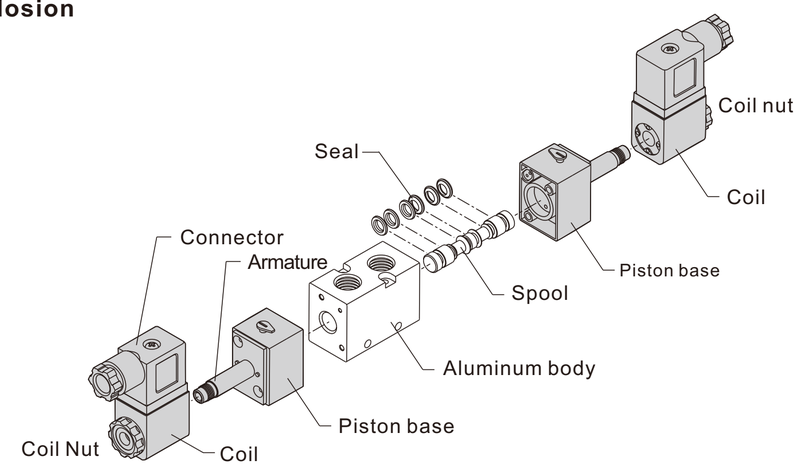






www.famcocorp.com
E-mail: info@famcocorp.com
@famco_group
Tel:۰۲۱-۴۸۰۰۰۰۴۹
Fax:۰۲۱ - ۴۴۹۹۴۶۴۲
تهران، کیلومتر۲۱ بزرگراه لشگری (جاده مخصوص کرج)
روبـروی پالایشگاه نفت پارس، پلاک ۱۲

# 225 Series 2/2 Way Solenoid Valve

*Stainless Steel SUS316 Series, Pilot Acting*

## Features

1. Pilot acting for low starting pressure.
2. Large flow rate and high working pressure.
3. Quick response.
4. Stainless steel body and stem provide exceptional durability.
5. Flange type is available for JIS 10K, ANSI 150LB and PN16.
6. Ex-proof coil T4 as optional accessory, please refer to page 5-9.
7. Timer for setting on/off time as optional accessory.
8. CE and EX-proof certified for all series.
9. Coil nut is available, please refer to page 5-3.

## How to order

| SPU225A | N | E | F | — | 03 | N | — | S1 | L | E |
|---|---|---|---|---|---|---|---|---|---|---|
| Stainless steel Pilot acting | Acting style | Diaphragm | Port size | | Port size | Thread | | Voltage | LED | Ex-Proof coil |
| | Blank :Normally closed<br>N :Normally open | Blank :VITON<br>B :NBR<br>E :EPDM<br>H :HNBR | Blank :W/O Flange<br>F :10K<br>F3 :150LB<br>F4 :PN16 | | 03 :3/8"<br>04 :1/2"<br>06 :3/4"<br>08 :1"<br>12 :1 1/4"<br>14 :1 1/2"<br>20 :2" | Blank :G<br>N :NPT<br>R :Rc | | S1:110VAC<br>S2:220VAC<br>S6:24VAC<br>S7:12VDC<br>S9:24VDC | Blank :W/O LED<br>L :W/I LED | Blank :Standard<br>E :Ex-proof coil |

## How to order Repair kit

| ZGPU225A | — | 03 | N |
|---|---|---|---|
| Repair kit | | Port size | Diaphragm |
| ZGPU225A (Normally closed)<br>ZGPU225AN (Normally open) | | 03 :3/8", 1/2"<br>06 :3/4", 1"<br>12 :1-1/4", 1-1/2"<br>20 :2" | N :NBR<br>V :VITON<br>E :EPDM<br>H :HNBR |

| Description | Qty. |
|---|---|
| Plunger | 1 |
| Spring | 2 |
| Diaphragm | 1 |

## Specifications

| Model | SPU225A-03 | SPU225A-04 | SPU225A-06 | SPU225A-08 | SPU225A-12 | SPU225A-14 | SPU225A-20 |
|---|---|---|---|---|---|---|---|
| Port size | 3/8" | 1/2" | 3/4" | 1" | 1 1/4" | 1 1/2" | 2" |
| Fluid | Compressed air (light oil, water) | | | | | | |
| Orifice | 13mm | | 25mm | | 38mm | | 50mm |
| Effective area | 88mm $^2$ | | 230mm $^2$ | | 404mm $^2$ | 552mm $^2$ | 883mm $^2$ |
| Acting | Pilot acting | | | | | | |
| Diaphragm | VITON ( Standard ), NBR, EPDM ( Option ) | | | | | | |
| Operating pressure range | 0.5 ~ 10 kgf/cm$^2$ | | | | | | |
| Proof pressure | 15 kgf/cm $^2$ | | | | | | |
| Body /Flange material | Stainless steel SUS316 / SUS304,SUS316 | | | | | | |
| Fluid temperature | -10℃ ~ 90℃ | | | | | | |
| Ambient temperature | -10℃ ~ 60℃ | | | | | | |
| Installation | Horizontal | | | | | | |
| Duty cycle | 100% ED | | | | | | |
| Coil type | DIN | | | | | | |
| Protection class | IP65 (DIN 40 050) | | | | | | |
| Insulation class | F | | | | | | |
| Voltage tolerance | ±10% | | | | | | |
| Standard voltage | 220VAC, 110VAC, 24VDC, the other voltage is optional | | | | | | |
| Power consumption | Normally closed AC110V: 17.6VA; AC220V: 18.1VA; DC:15W/Normally open AC: 17.8VA; DC:15W | | | | | | |
| Net weight | 775g | | 1550g | | 2820g | | 4665g |



## Seal material selection guide

| Seal | Temperature range | Suitable fluid | Unsuitable fluid |
|---|---|---|---|
| NBR | -15℃ ~ 80℃ | Air, Water, Neutral gases, Mineral oil | Fuel oil, Gasoline and Hi-test gasoline, Diesel fuel |
| HNBR | -40℃ ~ 150℃ | Air, Water, Gear oil, Engine oil | Pharmaceutical liquid, Gasoline and Hi-test gasoline, Light oil |
| VITON | -10℃ ~ 180℃ | Fuel oil, Gasoline and Hi-test gasoline, Diesel fuel | Hot water, Steam, Brake oil (ATE Blue) |
| EPDM | -5℃ ~ 130℃ | Hot water, Detergent liquid | Mineral oil, Gasoline |

## Dimensions

### SPU225A Standard type

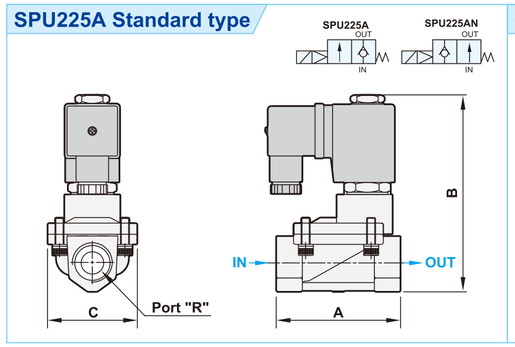


(mm)

| Model | SPU225A -03 | SPU225A -04 | SPU225A -06 | SPU225A -08 | SPU225A -12 | SPU225A -14 | SPU225A -20 |
|---|---|---|---|---|---|---|---|
| R | 3/8" | 1/2" | 3/4" | 1" | 1 1/4" | 1 1/2" | 2" |
| A | 66.5 | 66.5 | 100 | 100 | 131.5 | 131.5 | 160 |
| B | 106.5 | 106.5 | 126.5 | 126.5 | 145.5 | 145.5 | 160.5 |
| C | 48 | 48 | 75 | 75 | 96 | 96 | 112 |

### SPU225A Flange type (10K)

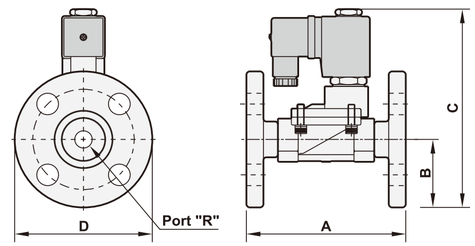


(mm)

| Model | SPU225AF -03 | SPU225AF -04 | SPU225AF -06 | SPU225AF -08 | PSU225AF -12 | SPU225AF -14 | SPU225AF -20 |
|---|---|---|---|---|---|---|---|
| R | 3/8" | 1/2" | 3/4" | 1" | 1 1/4" | 1 1/2" | 2" |
| A | 110 | 110 | 149 | 150 | 180 | 180 | 210 |
| B | 45 | 47.5 | 50 | 62.5 | 67.5 | 70 | 77.5 |
| C | 137 | 139.5 | 152.5 | 164 | 173 | 182.5 | 210 |
| D | 90 | 95 | 100 | 125 | 135 | 140 | 155 |

## Explosion

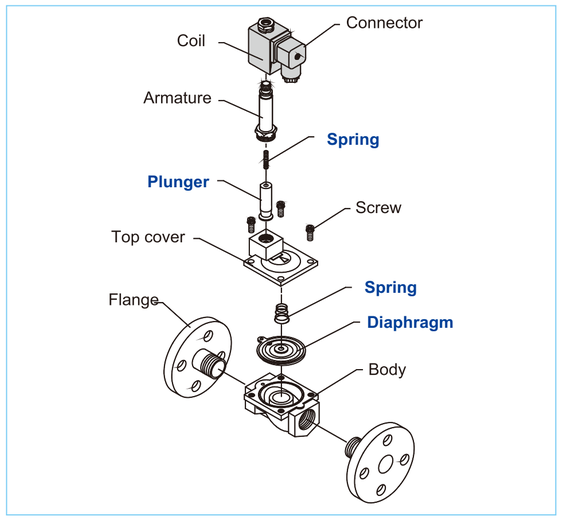


## Flow chart

3/8" Pilot acting

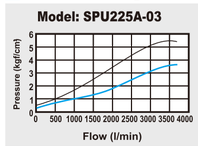


1/2" Pilot acting

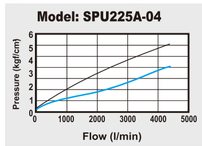


3/4" Pilot acting

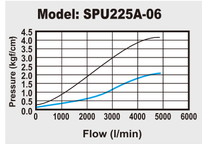


1" Pilot acting

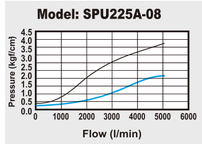






www.famcocorp.com
E-mail: info@famcocorp.com
@famco_group
Tel:۰۲۱- ۴۸۰۰۰۰۴۹
Fax:۰۲۱ - ۴۴۹۹۴۶۴۲
تهران، کیلومتر۲۱ بزرگراه لشگری (جاده مخصوص کرج)
روبـروی پالایشگاه نفت پارس، پلاک ۱۲

FAMCO
هایپرصنعت



# 220 Series 2/2 Way Solenoid Valve

*Brass Series, Assisted Lift*

## Features

1. Quick response.
2. Stainless steel stem provides exceptional durability.
3. Flange type is available for JIS 10K, ANSI 150LB and PN16.
4. Ex-proof coil T4 as optional accessory, please refer to page 5-9.
5. Timer for setting on/off time as optional accessory.
6. CE conformity for all series.
7. Coil nut is available, please refer to page 5-3.

## How to order

| PU220A | N | V | F | – | 03 | N | – | S1 | L | E |
|---|---|---|---|---|---|---|---|---|---|---|
| Brass Assisted Lift | Acting style | Diaphragm | Port size | | Port size | Thread | | Voltage | LED | Ex-Proof coil |
| | Blank :Normally closed<br>N :Normally open | Blank :NBR<br>V :VITON<br>E :EPDM<br>H :HNBR | Blank :W/O Flange<br>F :10K<br>F3 :150LB<br>F4 :PN16 only far A series | | 03 :3/8"<br>04 :1/2"<br>06 :3/4"<br>08 :1" | Blank :G<br>N :NPT<br>R :Rc | | S1:110VAC<br>S2:220VAC<br>S6:24VAC<br>S7:12VDC<br>S9:24VDC | Blank :W/O LED<br>L :W/I LED | Blank :Standard<br>E :Ex-proof coil |

## How to order Repair kit

| ZGPU220A | – | 03 | N |
|---|---|---|---|
| Repair kit | | Port size | Diaphragm |
| ZGPU220A (Normally closed)<br>ZGPU220AN (Normally open) | | 03 :3/8", 1/2"<br>06 :3/4"<br>08 :1" | N :NBR<br>V :VITON<br>E :EPDM<br>H :HNBR |

| Description | Qty. |
|---|---|
| Diaphragm set | 1 |
| Spring | 1 |
| Packing | 1 |

## Specifications

| Model | PU220A-03 | PU220A-04 | PU220A-06 | PU220A-08 |
|---|---|---|---|---|
| Port size | 3/8" | 1/2" | 3/4" | 1" |
| Fluid | Compressed air (light oil, water) | | | |
| Orifice | 13mm | 13mm | 20mm | 25mm |
| Effective area | 76mm² | 76mm² | 162mm² | 220mm² |
| Acting | Assisted Lift | | | |
| Construction | Diaphragm | | | |
| Operating pressure range AC | 0 ~ 7 kgf/cm² | | | |
| Operating pressure range DC | 0 ~ 6 kgf/cm² | | 0 ~ 5 kgf/cm² | |
| Proof pressure | 10 kgf/cm² | | | |
| Body material / Flange material | Forged Brass / Steel SS41 | | | |
| Fluid temperature | -10℃ ~ 90℃ | | | |
| Ambient temp0erature | -10℃ ~ 60℃ | | | |
| Installation | Horizontal | | | |
| Duty cycle | 100% ED | | | |
| Coil type | DIN | | | |
| Protection class | IP65 (DIN 40 050) | | | |
| Insulation class | F | | | |
| Voltage tolerance | ±10% | | | |
| Standard voltage | 220VAC, 110VAC, 24VDC, the other voltage is optional | | | |
| Power consumption | AC110V: 17.6VA, AC220V: 18.1VA,DC:15W (DC: 18.5W option) | | | |
| Net weight | 740g | 740g | 945g | 1485g |



## Seal material selection guide

| Seal | Temperature range | Suitable fluid | Unsuitable fluid |
|---|---|---|---|
| NBR | -15℃ ~ 80℃ | Air, Water, Neutral gases, Mineral oil | Fuel oil, Gasoline and Hi-test gasoline, Diesel fuel |
| HNBR | -40℃ ~ 150℃ | Air, Water, Gear oil, Engine oil | Pharmaceutical liquid, Gasoline and Hi-test gasoline, Light oil |
| VITON | -10℃ ~ 180℃ | Fuel oil, Gasoline and Hi-test gasoline, Diesel fuel | Hot water, Steam, Brake oil (ATE Blue) |
| EPDM | -5℃ ~ 130℃ | Hot water, Detergent liquid | Mineral oil, Gasoline |

## Dimensions

### PU220A Standard type

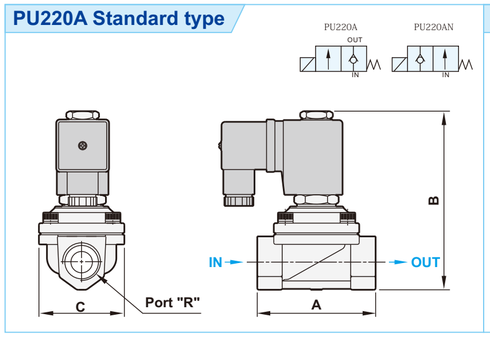


### PU220A Standard type (10K)

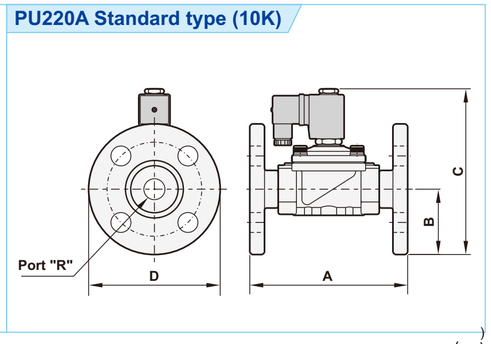


(mm)

| Model | PU220A-03 | PU220A-04 | PU220A-06 | PU220A-08 |
|---|---|---|---|---|
| R | 3/8" | 1/2" | 3/4" | 1" |
| A | 66.5 | 66.5 | 71 | 96 |
| B | 101 | 101 | 107 | 120.5 |
| C | 48 | 48 | 58 | 70.7 |

(mm)

| Model | PU220AF-03 | PU220AF-04 | PU220AF-06 | PU220AF-08 |
|---|---|---|---|---|
| R | 3/8" | 1/2" | 3/4" | 1" |
| A | 110 | 110 | 120 | 150 |
| B | 45 | 47.5 | 50 | 62.5 |
| C | 130.5 | 133 | 138.5 | 158.5 |
| D | 90 | 95 | 100 | 125 |

## Explosion

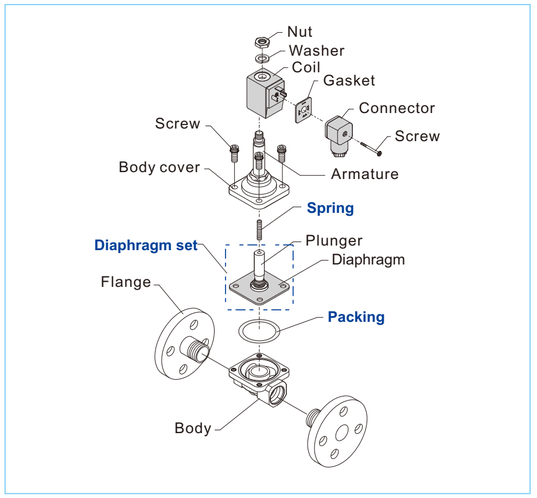


## Flow chart

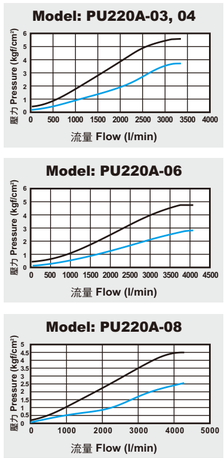






www.famcocorp.com
E-mail: info@famcocorp.com
@famco_group
Tel:۰۲۱- ۴ ۸ ۰ ۰ ۰ ۰ ۴ ۹
Fax :۰۲۱ - ۴۴۹۹۴۶۴۲
تهران، کیلومتر۲۱ بزرگراه لشگری (جاده مخصوص کرج)
روبـروی پالایشگاه نفت پارس، پلاک ۱۲

FAMCO
هایپرصنعت

SHAKO

# 220 Series 2/2 Way Solenoid Valve

*Brass Series, Direct Acting*

SHAKO FLUID POWER

## Features

1. Direct acting.
2. Quick response.
3. Timer for setting on/off time as optional accessory.
4. Ex-proof coil is available, please refer to page 5-9, 5-10.
5. Coil nut is available, please refer to page 5-1, 5-3.

## How to order

**PU220AR V – 01 1 N – S1 L E1**

| Brass Direct acting | Diaphragm | Port size | Pressure | Thread | Voltage | Led | Ex-Proof coil |
|---|---|---|---|---|---|---|---|
| | Blank : NBR<br>V : VITON<br>E : EPDM<br>H : HNBR | 01 : 1/8"<br>02 : 1/4"<br>03 : 3/8" | Blank: Standard<br>1: High pressure<br>2: Medium pressure<br>*High pressure & Medium pressure are only available for PU220AR-01 & PU220AR-02 | Blank : G<br>N : NPT<br>R : Rc | S1: 110VAC<br>S2: 220VAC<br>S6: 24VAC<br>S7: 12VDC<br>S9: 24VDC | Blank: W/O LED<br>L : W/I LED | Blank : DIN<br>E1: EX-proof 22mm width<br>E2: EX-proof 30mm width<br>E3: EX-proof CSA standard<br>E4: EX-proof 36mm width<br>PU220AR-03 is only available for E4 ex-proof coil. |

## How to order Repair kit

**ZGPU220AR – 01 N**

| Repair kit | Port size | Diaphragm |
|---|---|---|
| | 01 : 1/8", 1/4"<br>03 : 3/8" | N : NBR<br>V : VITON<br>E : EPDM<br>H : HNBR |

| ZGPU220AR-01 | |
|---|---|
| Description | Qty. |
| Plunger | 1 |
| O-ring | 1 |

| ZGPU220AR-03 | |
|---|---|
| Description | Qty. |
| Plunger | 1 |
| Orifice adaptor | 1 |
| Diaphragm | 1 |
| O-ring | 1 |

## Specifications

| Model | PU220AR -01 | PU220AR -011 | PU220AR -012 | PU220AR -02 | PU220AR -021 | PU220AR -022 | PU220AR -03 |
|---|---|---|---|---|---|---|---|
| Port size | 1/8" | | | 1/4" | | | 3/8" |
| Fluid | Compressed air (light oil, water) | | | | | | |
| Orifice | 1.5mm | 0.8mm | 1.2mm | 2.3mm | 1.2mm | 1.5mm | 8.0mm |
| Effective area | 1.8mm² | | | 3.3mm² | | | 20.64mm² |
| Acting | Direct acting | | | | | | Assisted lift |
| Construction | Gasket | | | | | | Diaphragm |
| Operating pressure range AC | 0~8.5 kgf/cm² | 0~20kgf/cm² | 0~16kgf/cm² | 0~8.5kgf/cm² | 0~20kgf/cm² | 0~16kgf/cm² | 0~8.5kgf/cm² |
| Operating pressure range DC | 0~7 kgf/cm² | 0~13kgf/cm² | 0~10kgf/cm² | 0~7kgf/cm² | 0~13kgf/cm² | 0~10kgf/cm² | 0~7kgf/cm² |
| Proof pressure | 10 kgf/cm² | | | | | | |
| Body material | Brass | | | | | | |
| Fluid temperature | -10℃ ~ 90℃ | | | | | | |
| Ambient temperature | -10℃ ~ 60℃ | | | | | | |
| Installation | Any direction (Horizontal is recommended) | | | | | | |
| Duty cycle | 100% ED | | | | | | |
| Coil type | DIN | | | | | | |
| Protection class | IP65 (DIN 40 050) | | | | | | |
| Insulation class | F | | | | | | |
| Voltage tolerance | ±10% | | | | | | |
| Standard voltage | 220VAC, 110VAC, 24VDC, the other voltage is optional | | | | | | |
| Power consumption | AC: 6.0VA, DC: 4.8W | | | | | | AC110V:17.6VA, AC220V:18.1VA, DC:15W (DC:18.5W option) |
| Net weight | 175g | | | 255g | | | 510g |



## Seal material selection guide

| Seal | Temperature range | Suitable fluid | Unsuitable fluid |
|---|---|---|---|
| NBR | -15℃ ~ 80℃ | Air, Water, Neutral gases, Mineral oil | Fuel oil, Gasoline and Hi-test gasoline, Diesel fuel |
| HNBR | -40℃ ~ 150℃ | Air, Water, Gear oil, Engine oil | Pharmaceutical liquid, Gasoline and Hi-test gasoline, Light oil |
| VITON | -10℃ ~ 180℃ | Fuel oil, Gasoline and Hi-test gasoline, Diesel fuel | Hot water, Steam, Brake oil (ATE Blue) |
| EPDM | -5℃ ~ 130℃ | Hot water, Detergent liquid | Mineral oil, Gasoline |

## Dimensions

**PU220AR-01**

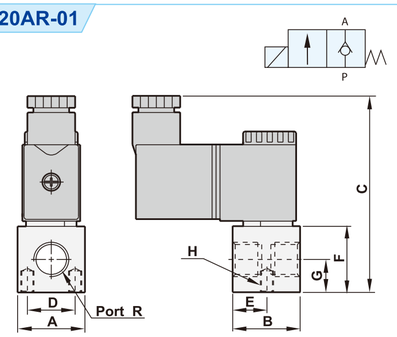


**PU220AR-02**

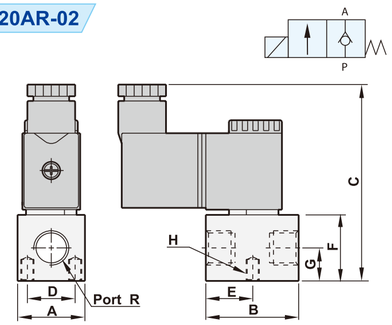


**PU220AR-03**

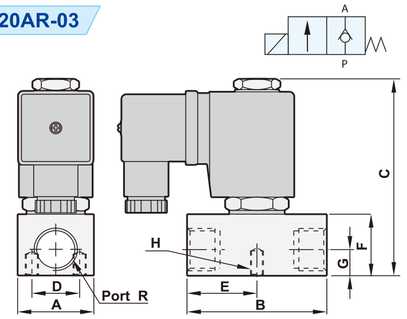


(mm)

| Model | PU220AR-01 | PU220AR-02 | PU220AR-03 |
|---|---|---|---|
| R | 1/8" | 1/4" | 3/8" |
| A | 22 | 25.4 | 30 |
| B | 22 | 35 | 55 |
| C | 72 | 75 | 79 |
| D | 15 | 18 | 18 |
| E | 11 | 17.5 | 27.5 |
| F | 22 | 25.4 | 25 |
| G | 7.5 | 12.7 | 11 |
| H | M4xP0.7xL6.5 | M5xP0.8xL7.0 | M5xP0.8xL7.0 |

## Flow chart

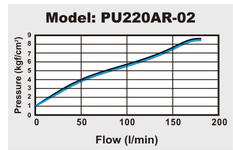


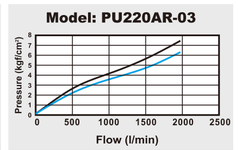


## Explosion

**PU220AR-03** Zero pressure differential operation pilot acting

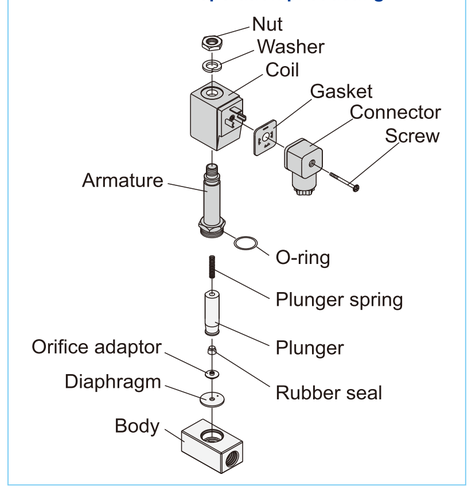






www.famcocorp.com
E-mail: info@famcocorp.com
@famco_group
Tel:۰۲۱-۴۸۰۰۰۰۴۹
Fax:۰۲۱ - ۴۴۹۹۴۶۴۲
تهران، کیلومتر۲۱ بزرگراه لشگری (جاده مخصوص کرج)
روبـروی پالایشگاه نفت پـارس، پلاک ۱۲

FAMCO
هایپرصنعت

SHAKO

# 225 Series 2/2 Way Solenoid Valve

*Brass Series, Pilot Acting*

SHAKO FLUID POWER

## Features

1. Pilot acting for low starting pressure.
2. Large flow rate and high working pressure.
3. Quick response.
4. Stainless steel stem provides exceptional durability.
5. Flange type is available for JIS 10K, ANSI 150LB and PN16.
6. Ex-proof coil T4 as optional accessory, please refer to page 5-9.
7. Timer for setting on/off time as optional accessory.
8. CE conformity for all series.
9. Coil nut is available, please refer to page 5-3.

## How to order

| PU225A | N | V | F | – | 03 | N | – | S1 | L | E |
|---|---|---|---|---|---|---|---|---|---|---|
| Pilot Acting | Acting style | Diaphragm | Port size | | Port size | Thread | | Voltage | LED | Ex-Proof coil |
| | Blank :Normally closed<br>N :Normally open | Blank :NBR<br>V :VITON<br>E :EPDM<br>H :HNBR | Blank :W/O Flange<br>F :10K<br>F3 :150LB<br>F4 :PN16 | | 03 :3/8"<br>04 :1/2"<br>06 :3/4"<br>08 :1"<br>12 :1 1/4"<br>14 :1 1/2"<br>20 :2" | Blank :G<br>N :NPT<br>R :Rc | | S1:110VAC<br>S2:220VAC<br>S6:24VAC<br>S7:12VDC<br>S9:24VDC | Blank :W/O LED<br>L :W/I LED | Blank :Standard<br>E :Ex-proof coil |

## How to order Repair kit

| ZGPU225A | – | 03 | N |
|---|---|---|---|
| Repair kit | | Port size | Diaphragm |
| ZGPU225A (Normally closed)<br>ZGPU225AN (Normally open) | | 03 :3/8", 1/2"<br>06 :3/4", 1"<br>12 :1-1/4", 1-1/2"<br>20 :2" | N :NBR<br>V :VITON<br>E :EPDM<br>H :HNBR |

| Description | Qty. |
|---|---|
| Plunger | 1 |
| Spring | 2 |
| Diaphragm | 1 |

## Specifications

| Model | PU225A-03 | PU225A-04 | PU225A-06 | PU225A-08 | PU225A-12 | PU225A-14 | PU225A-20 |
|---|---|---|---|---|---|---|---|
| Port size | 3/8" | 1/2" | 3/4" | 1" | 1 1/4" | 1 1/2" | 2" |
| Fluid | Compressed air (light oil, water) | | | | | | |
| Orifice | 13mm | | 25mm | | 38mm | | 50mm |
| Effective area | 88mm² | | 230mm² | | 404mm² | 552mm² | 883mm² |
| Acting | Pilot acting | | | | | | |
| Construction | Diaphragm | | | | | | |
| Operating pressure range | 0.5～10kgf/cm²(0.5 ~ 10.0Bar) | | | | | | |
| Proof pressure | 15 kgf/cm²(15.0Bar) | | | | | | |
| Body / Flange material | Forged Brass / Steel SS41 | | | | | | |
| Fluid temperature | -10℃ ～ 90℃ | | | | | | |
| Ambient temperature | -10℃ ～ 60℃ | | | | | | |
| Installation | Horizontal | | | | | | |
| Duty cycle | 100% ED | | | | | | |
| Coil type | DIN | | | | | | |
| Protection class | IP65 (DIN 40 050) | | | | | | |
| Insulation | F | | | | | | |
| Voltage tolerance | ±10% | | | | | | |
| Standard voltage | 220VAC, 110VAC, 24VDC, the other voltage is optional | | | | | | |
| Power consumption | Normally closed AC110V: 17.6VA; AC220V: 18.1VA; DC:15W/Normally open AC: 17.8VA; DC:15W | | | | | | |
| Net weight | 775g | | 1550g | | 2820g | | 4665g |



## Seal material selection guide

| Seal | Temperature range | Suitable fluid | Unsuitable fluid |
|---|---|---|---|
| NBR | -15℃ ～ 80℃ | Air, Water, Neutral gases, Mineral oil | Fuel oil, Gasoline and Hi-test gasoline, Diesel fuel |
| HNBR | -40℃ ～ 150℃ | Air, Water, Gear oil, Engine oil | Pharmaceutical liquid, Gasoline and Hi-test gasoline, Light oil |
| VITON | -10℃ ～ 180℃ | Fuel oil, Gasoline and Hi-test gasoline, Diesel fuel | Hot water, Steam, Brake oil (ATE Blue) |
| EPDM | -5℃ ～ 130℃ | Hot water, Detergent liquid | Mineral oil, Gasoline |

## Dimensions

### PU225A Standard type

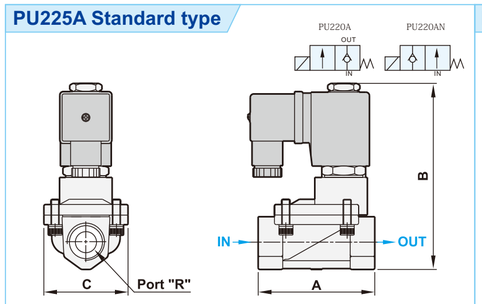


(mm)

| Model | PU225A -03 | PU225A -04 | PU225A -06 | PU225A -08 | PU225A -12 | PU225A -14 | PU225A -20 |
|---|---|---|---|---|---|---|---|
| R | 3/8" | 1/2" | 3/4" | 1" | 1 1/4" | 1 1/2" | 2" |
| A | 66.5 | 66.5 | 96 | 96 | 131.5 | 131.5 | 160 |
| B | 106.5 | 106.5 | 126 | 126 | 145.5 | 145.5 | 160 |
| C | 48.5 | 48 | 70.7 | 70.7 | 96 | 96 | 112 |

### PU225A Standard type (10K)

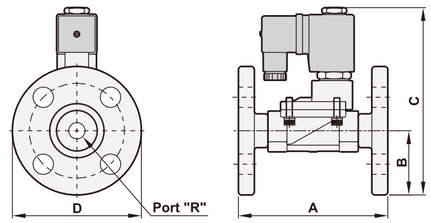


(mm)

| Model | PU225AF -03 | PU225AF -04 | PU225AF -06 | PU225AF -08 | PU225AF -12 | PU225AF -14 | PU225AF -20 |
|---|---|---|---|---|---|---|---|
| R | 3/8" | 1/2" | 3/4" | 1" | 1 1/4" | 1 1/2" | 2" |
| A | 110 | 110 | 145 | 150 | 180 | 180 | 210 |
| B | 45 | 47.5 | 50 | 62.5 | 67.5 | 70 | 77.5 |
| C | 136 | 138.5 | 153 | 165.5 | 173 | 182.5 | 210 |
| D | 90 | 95 | 100 | 125 | 135 | 140 | 155 |

## Explosion

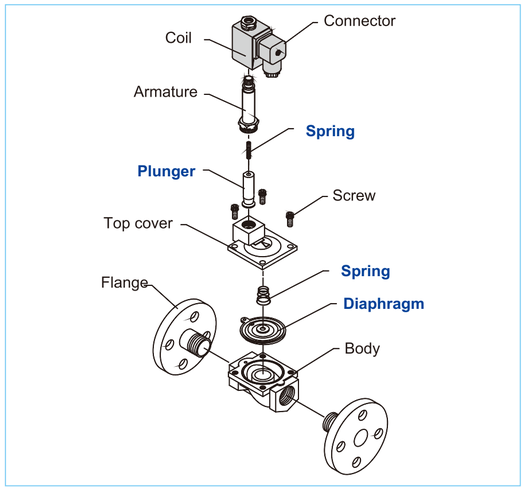


## Flow chart

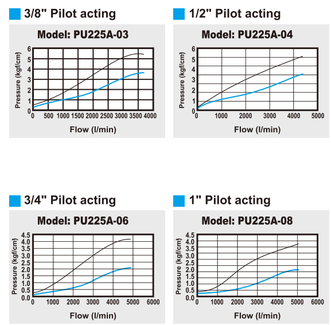






www.famcocorp.com
E-mail: info@famcocorp.com
@famco_group
Tel:۰۲۱-۴۸۰۰۰۰۴۹
Fax:۰۲۱ - ۴۴۹۹۴۶۴۲
تهران، کیلومتر۲۱ بزرگراه لشگری (جاده مخصوص کرج)
روبـروی پالایشگاه نفت پارس، پلاک ۱۲

FAMCO
هایپرصنعت



# PU Series 3/2 Way Direct Solenoid Valve

## Features

1. 3/2 way solenoid valve.The valve is easy to be stacked.
2. To stack the valve, assembly kit is necessary.
3. Assembly kit includes O-ring x 1, bolt x 2, screw x 2, nut x 2.
4. Coil nut is available, please refer to page 5-1.

## How to order

| PU320 | N | M02 | — | 02 | N | — | S2 | — | L | E1 |
|---|---|---|---|---|---|---|---|---|---|---|
| 3/2 Way | Acting style | Number of stack | | Port size | Thread | | Voltage | | Led | Coil type |
| | Blank: Normally closed<br>N : Normally open | Blank : W/O Stack<br>M02 : 2 Valves stack<br>M03 : 3 Valves stack<br>Mxx : xx Valves stack | | 01 : 1/8"<br>02 : 1/4" | Blank: G<br>N : NPT<br>R : Rc | | S1: 110VAC<br>S2: 220VAC<br>S6: 24VAC<br>S7: 12VDC<br>S9: 24VDC | | Blank: W/O LED<br>L : W/I LED | Blank : DIN<br>F : Lead wire<br>E1: EX-proof 22mm width<br>E2: EX-proof 30mm width<br>E3: EX-proof CSA standard |

* Please refer to page 5-10 for the details of ex-proof coil.

## Dimensions

PU320-(01,02)-S

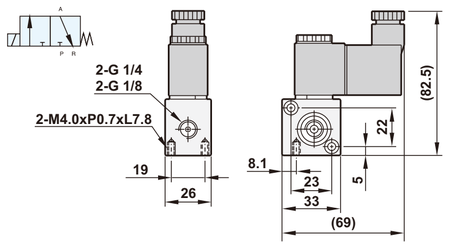


PU320N-(01,02)-S

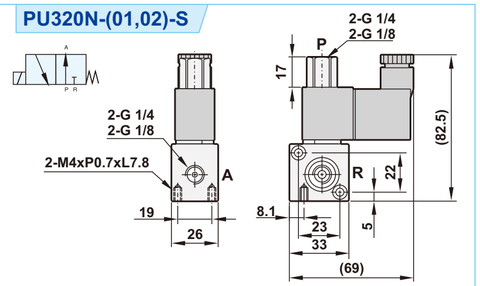


## Specifications

| Model | PU320(N)-01-S | PU320(N)-02-S |
|---|---|---|
| Port size | 1/8" | 1/4" |
| Body material | Aluminum alloy | |
| Effective area | 1.5mm² | |
| Fluid | Compressed air | |
| Acting | Direct acting with spring return | |
| Operating pressure range | 0 ~ 8 kgf/cm² | |
| Proof pressure | 9.9 kgf/cm² | |
| Ambient temperature | -10℃ ~ 60℃ | |
| Duty cycle | 100% ED | |
| Coil type | DIN | |
| Protection class | IP65 (DIN 40 050) | |
| Insulation class | F | |
| Voltage tolerance | ±10% | |
| Standard voltage | 220VAC, 110VAC, 24VDC<br>(The other voltage is optional) | |
| Net weight | 180g | 160g |

## How to stack valve

PU320Mxx

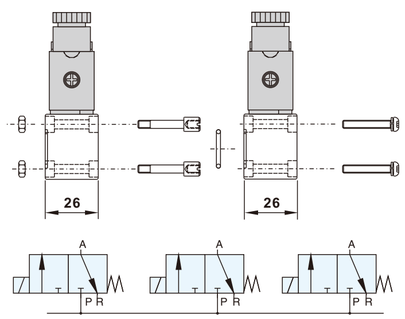


**Mounting kit includes:**
**one o-ring, two bolts, two screws, two hex nuts**



Memo...





www.famcocorp.com
E-mail: info@famcocorp.com
@famco_group
Tel:۰۲۱-۴۸۰۰۰۰۴۹
Fax:۰۲۱ - ۴۴۹۹۴۶۴۲
تهران، کیلومتر۲۱ بزرگراه لشگری (جاده مخصوص کرج)
روبـروی پالایشگاه نفت پارس، پلاک ۱۲

# PU Series 3/2 Way Pilot Solenoid Valve

## Features

1. Medium size, large flow rate.
2. Lockable manual override for easy operation.
3. Anodized aluminum body and strict quality control provide a long durability.
4. Coil nut is available, please refer to page 5-1.

## How to order

| PU322 | N | – | 02 | N | – | S2 | – | L | E1 |
|---|---|---|---|---|---|---|---|---|---|
| 3/2 Way | Acting style | | Port size | Thread | | Voltage | | Led | Coil type |
| | Blank: Normally closed<br>N : Normally open | | 02 : 1/4"<br>03 : 3/8"<br>04 : 1/2" | Blank: G<br>N : NPT<br>R : Rc | | S1 : 110VAC<br>S2 : 220VAC<br>S6 : 24VAC<br>S7 : 12VDC<br>S9 : 24VDC | | Blank: W/O LED<br>L : W/I LED | Blank: DIN<br>F : Lead wire<br>E1: EX-proof 22mm width<br>E2: EX-proof 30mm width<br>E3: EX-proof CSA standard |

* Please refer to page 5-10 for the details of ex-proof coil.

## Specifications

| Model | PU322(N)-02-S | PU322(N)-03-S | PU322(N)-04-S |
|---|---|---|---|
| Port size | 1/4" | 3/8" | 1/2" |
| Body material | Aluminum alloy | | |
| Fluid | Compressed air | | |
| Effective area | 18mm² | 35mm² | 70mm² |
| Acting | Internal pilot | | |
| Operating pressure range | 2 ~ 8 kgf/cm² | | |
| Proof pressure | 9.9 kgf/cm² | | |
| Ambient temperature | -10℃ ~ 50℃ | | |
| Duty cycle | 100% ED | | |
| Coil type | DIN (Standard) | | |
| Protection class | IP65 (DIN 40 050) | | |
| Insulation class | F | | |
| Voltage tolerance | ±10% | | |
| Standard voltage | 220VAC, 110VAC, 24VDC (The other voltage is optional) | | |
| Net weight | 280g | 450g | 685g |

## Flow chart

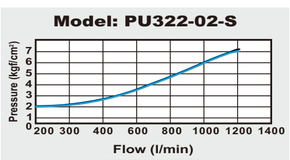


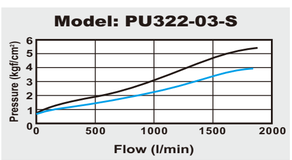


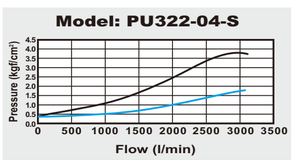




## Dimensions

### PU322-02-S

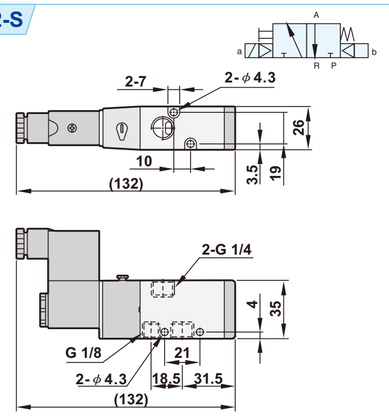


### PU322N-02-S

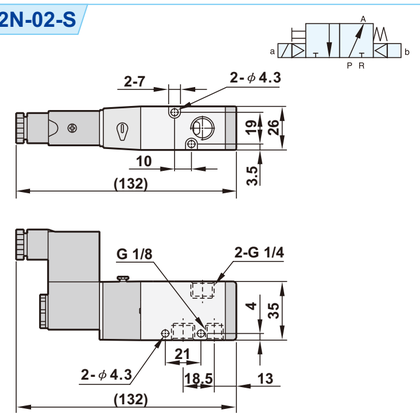


### PU322-03-S

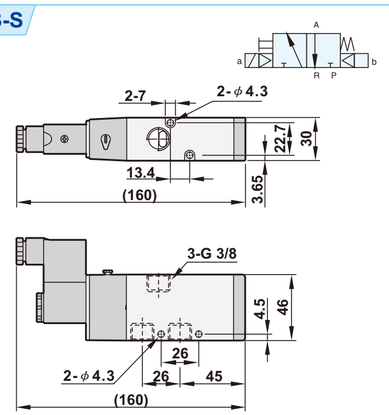


### PU322N-03-S

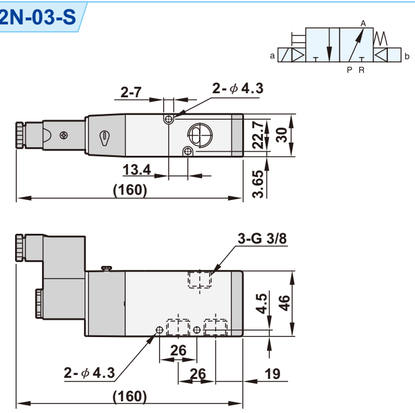


### PU322-04-S

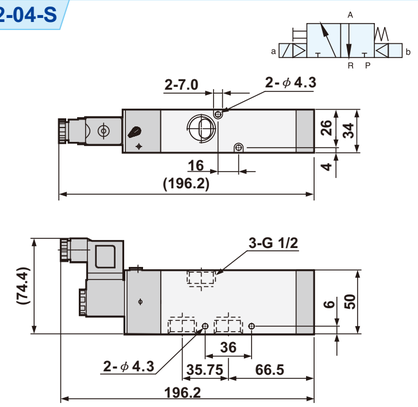


### PU322N-04-S

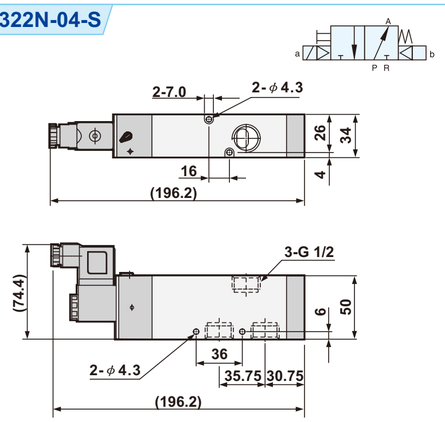






www.famcocorp.com
E-mail: info@famcocorp.com
@famco_group
Tel:۰۲۱- ۴ ۸ ۰ ۰ ۰ ۰ ۴ ۹
Fax :۰۲۱ - ۴۴۹۹۴۶۴۲
تهران، کیلومتر۲۱ بزرگراه لشگری (جاده مخصوص کرج)
روبـروی پالایشگاه نفت پارس، پلاک ۱۲