FAMCO
هایپرصنعت

SUBARU
Industrial Power Products

EX-Premium series
13/17/21/27

Air cooled 4 cycle OHV Gasoline Engine

www.famcocorp.com
E-mail: info@famcocorp.com
@famco_group

Tel:۰۲۱-۴۸۰۰۰۰۴۹
Fax:۰۲۱ - ۴۴۹۹۴۶۴۲

تهران، کیلومتر۲۱ بزرگراه لشگری (جاده مخصوص کرج)
روبـروی پالایشگاه نفت پارس، پلاک ۱۲

FAMCO
هایپرصنعت

SUBARU
Industrial Power Products

EX-Premium, the Extreme Engines.

EX-Premium engines are designed to meet professional users' demands, with extremely high durability and reliability.

1. EXtremely Silent - Soft Tone Quality

EX-Premium engines are 2dBA quieter and softer in tone than other engines in the same class.
The quiet and soft tone is achieved by:
- A reduction in mechanical noise realized by employing sophisticated OHC system.
- Employment of an optimized capacity Rigid Muffler.

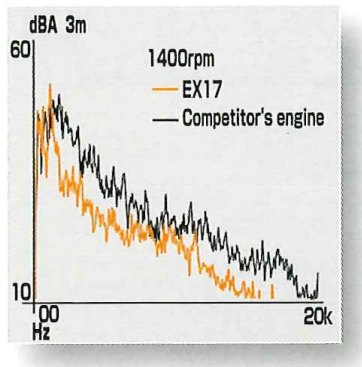

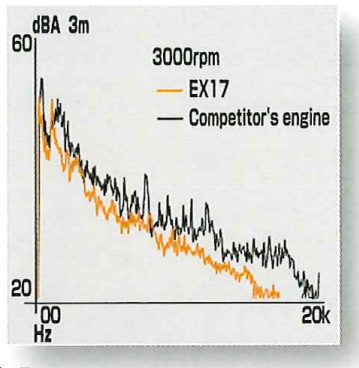

Sound Comparison at each Frequency

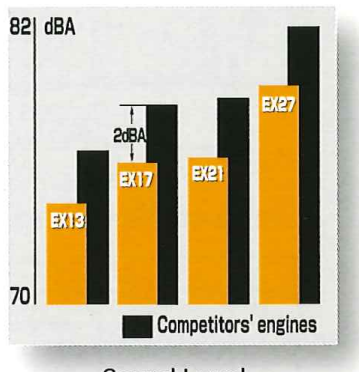

Sound Level
(average in 4 directions)

2. EXtremely Easy Start - No Kick-back

Reliable Starting and Less Pulling Force are achieved by:

- Sophisticated Mechanical Compression Release System as well as newly designed Combustion Chamber.
- EX-Premium engines start instantly even at minus (-) 10°C(14°F), without any perceptible kick-back.

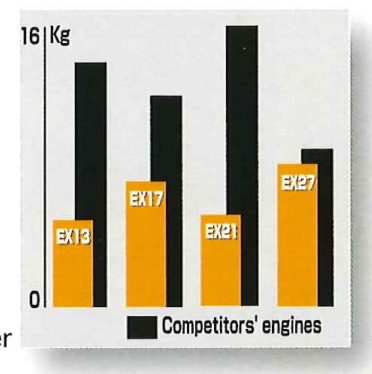

Pulling force of Recoil Starter

3. EXtremely Easy Maintenance

Extreme ease of maintenance is realized by:

- **High Parts Commonality Between Models**
  simplifies maintenance & lowers repair cost due to fewer parts for service.
  More than 90% of component parts are common between more than two models, including Muffler, Intake and Exhaust Valves, Valve Springs, etc.
  Furthermore, more than 50% of component parts are common among EX13, EX17 and EX21, such as Chain Guide, Air Cleaner, Ignition Coil, etc.
- **No special tools**
  required for routine maintenance, assembly and disassembly.

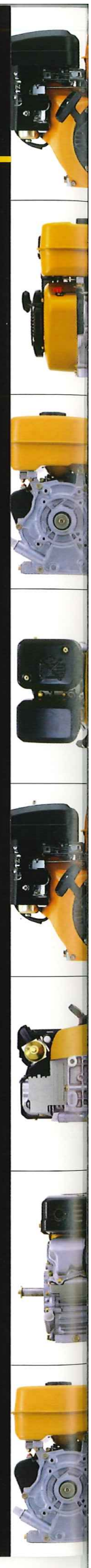

www.famcocorp.com
E-mail: info@famcocorp.com
@famco_group
Tel:۰۲۱-۴۸۰۰۰۰۴۹
Fax:۰۲۱-۴۴۹۹۴۶۴۲
تهران، کیلومتر۲۱ بزرگراه لشگری (جاده مخصوص کرج)
روبـروی پالایشگاه نفت پارس، پلاک ۱۲

FAMCO
هایپرصنعت

That's Extreme!

EX engines are superior to engines in the same class.

4. EXtremely Advanced Technology

Extreme reliability and durability are achieved by:

- **Heavy Duty Chain Driven OHC System**
  Oval type case-hardened steel links enhance performance and resist stretching, which result in extended maintenance free operation.
- **Completely New Main Bearing Cover Design**
  Flush-mounted main bearing cover with lower moment of deformation significantly increases reliability and engine life.
- **Superior Cooling and Lubrication System**
  Engine life is extended through the high efficient cooling and precision lubrication systems.
  Large cooling fins are engineered into the crankcase, cylinder and mounting base.
- **Large Ball Bearings** on both ends of crankshaft for maximum stability under demanding loads.
- **Cast Iron Cylinder Liner** resists wear.

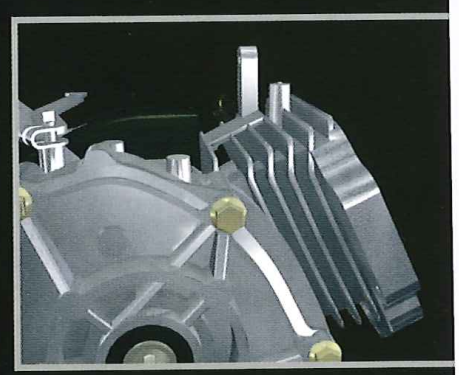

Slant Cooling Fins on Cylinde

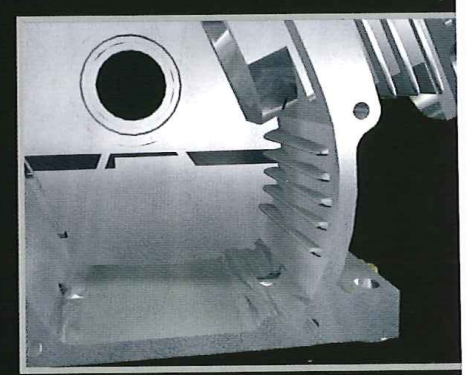

Cooling Fins inside Crankcase

5. EXtreme Power and Performance

Extremely Higher Power and

Lower Fuel Consumption are realized by:

- High speed and homogeneous combustion achieved by sophisticated Pentroof Combustion Chamber which includes Intake and Exhaust Valves located at optimum angle.
- Straight Intake Port with minimal air flow resistance.

Environmentally friendly.

EX-Premium engines comply with EPA and CARB Emission Regulations in the USA.

Extreme application compatibility

With four versatile models, existing competitive slant-cylinder engines can easily be replaced.

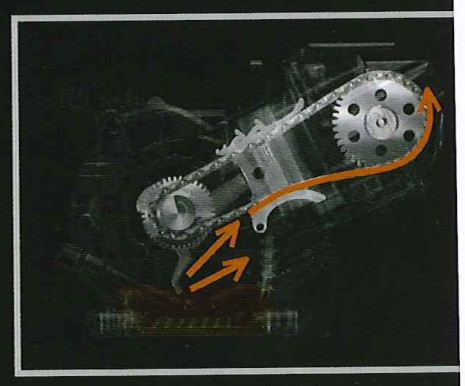

Lubrication System

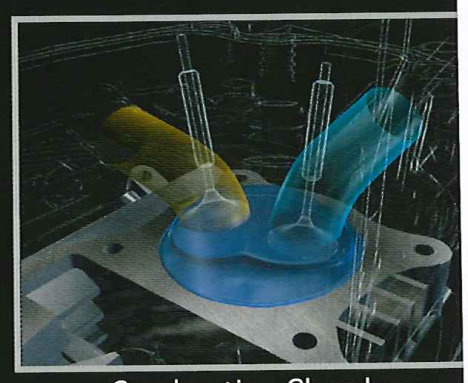

Combustion Chamber

www.famcocorp.com
E-mail: info@famcocorp.com
@famco_group
Tel:۰۲۱- ۴۸۰۰۰۰۴۹
Fax:۰۲۱ - ۴۴۹۹۴۶۴۲
تهران، کیلومتر۲۱ بزرگراه لشگری (جاده مخصوص کرج)
روبـروی پالایشگاه نفت پارس، پلاک ۱۲

FAMCO
هایپرصنعت

EX13-Premium

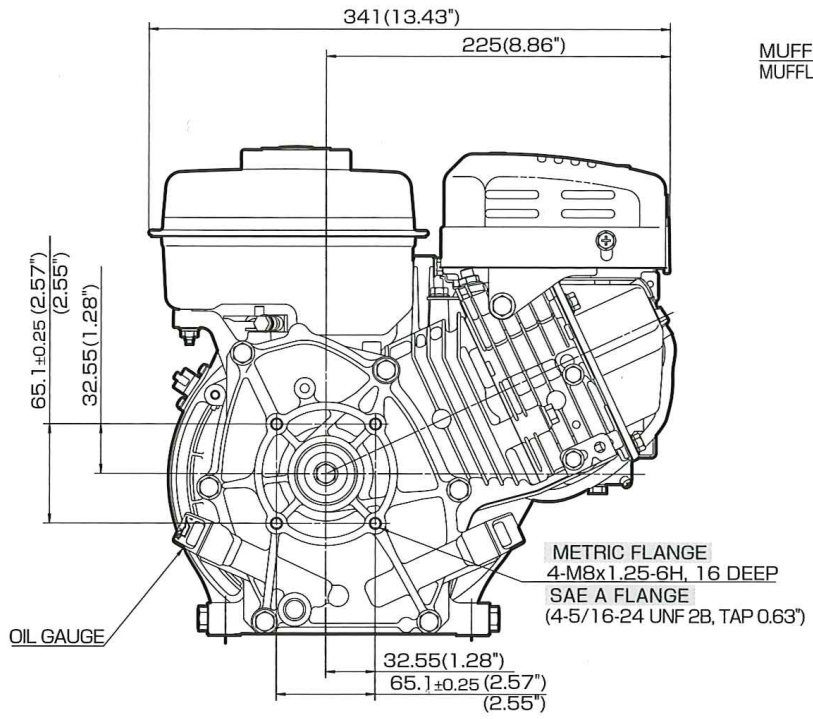

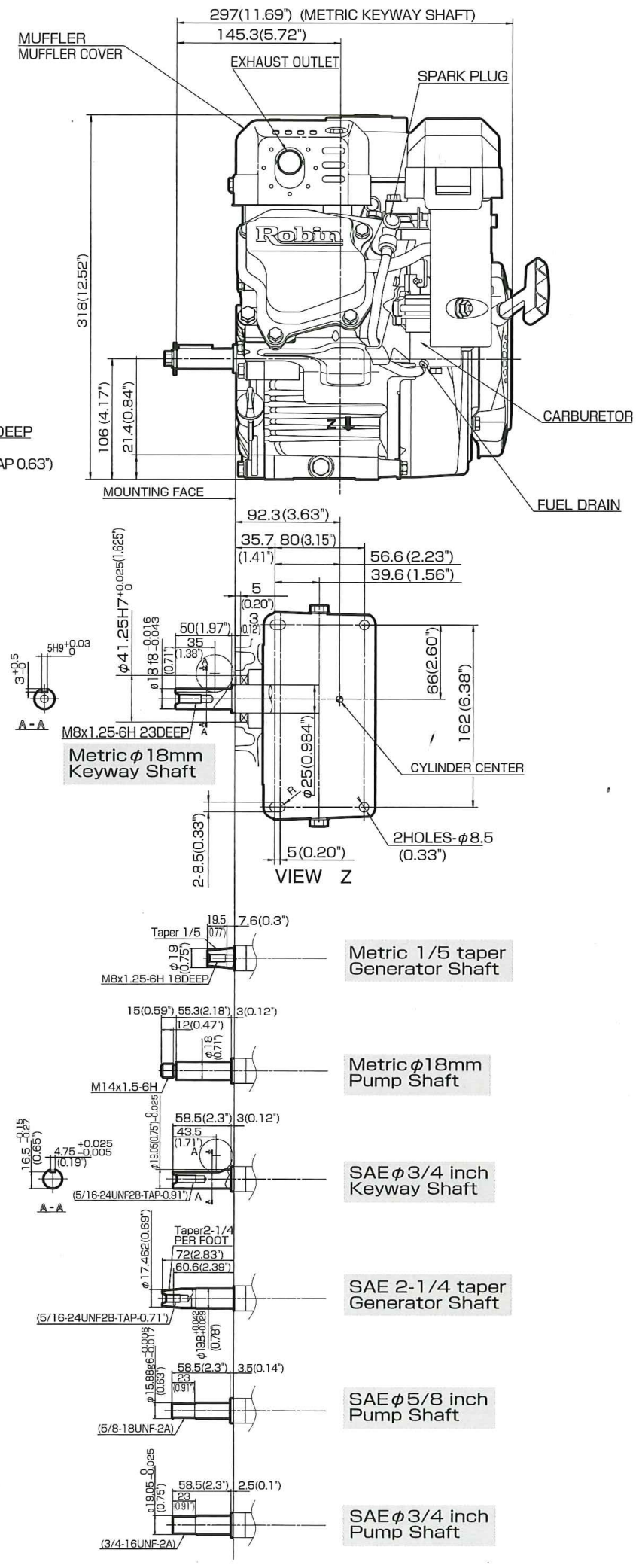

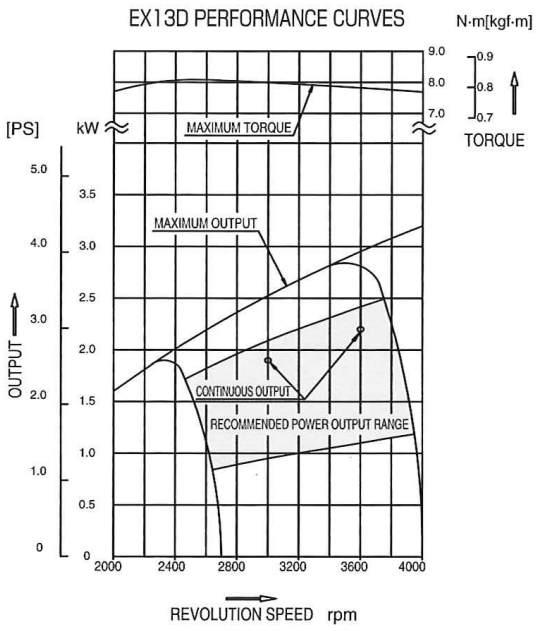

Power curves are corrected to standard sea level atmospheric condition and are developed from test engines equipped with standard air cleaner and muffler.

www.famcocorp.com
E-mail: info@famcocorp.com
@famco_group
Tel:۰۲۱-۴۸۰۰۰۰۴۹
Fax:۰۲۱ - ۴۴۹۹۴۶۴۲
تهران، کیلومتر۲۱ بزرگراه لشگری (جاده مخصوص کرج)
روبـروی پالایشگاه نفت پارس، پلاک ۱۲

FAMCO
هایپرصنعت

EX17-Premium

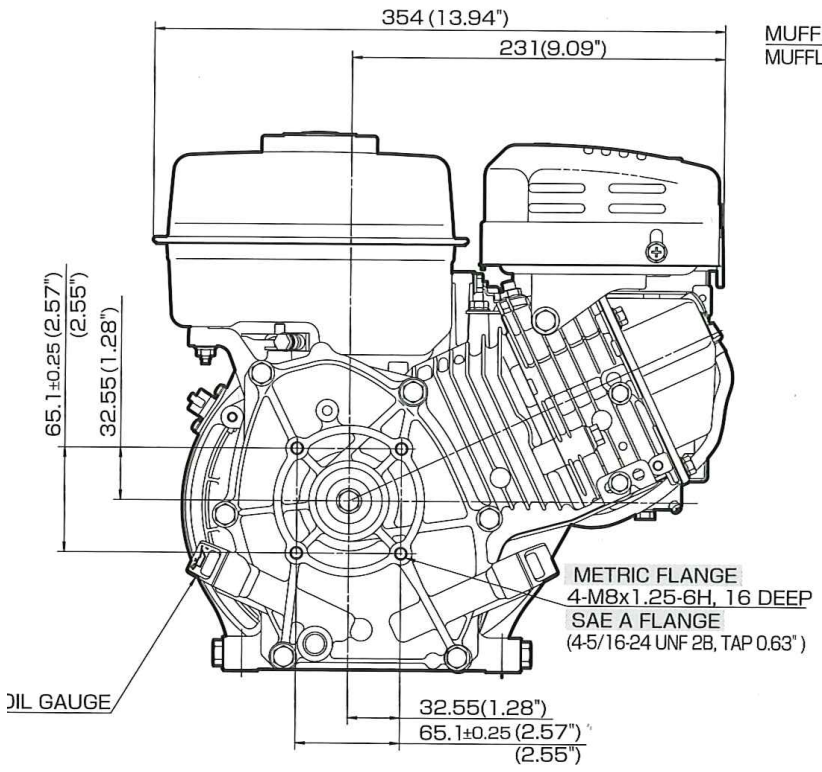

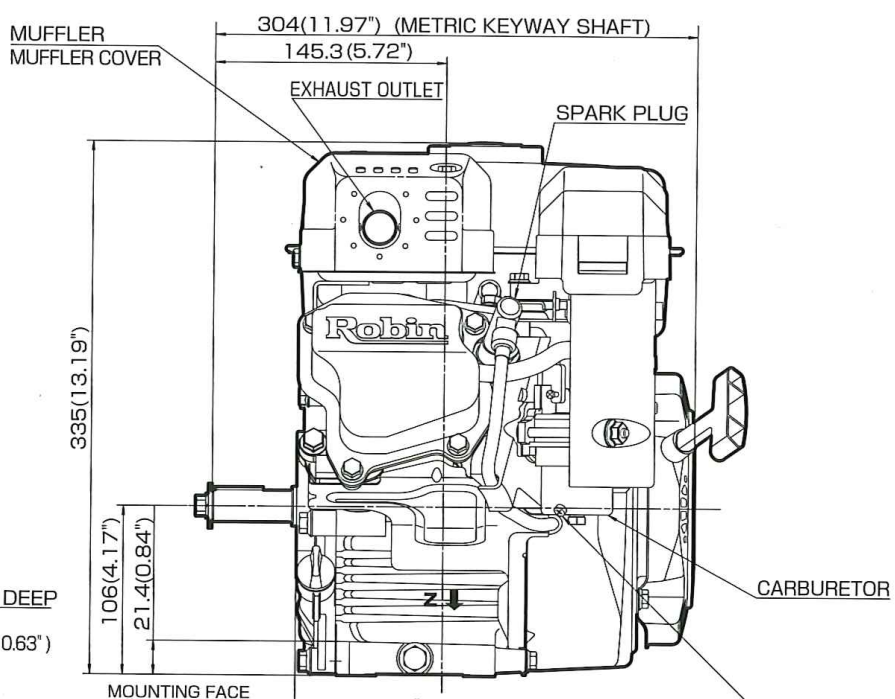

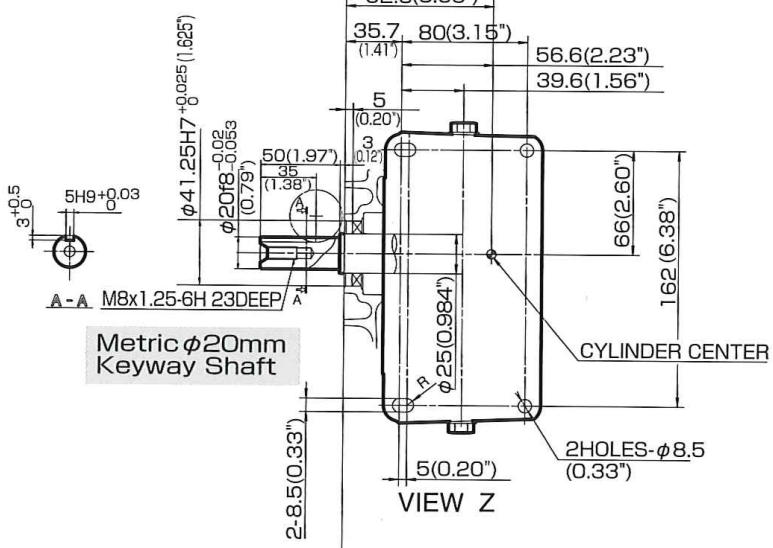

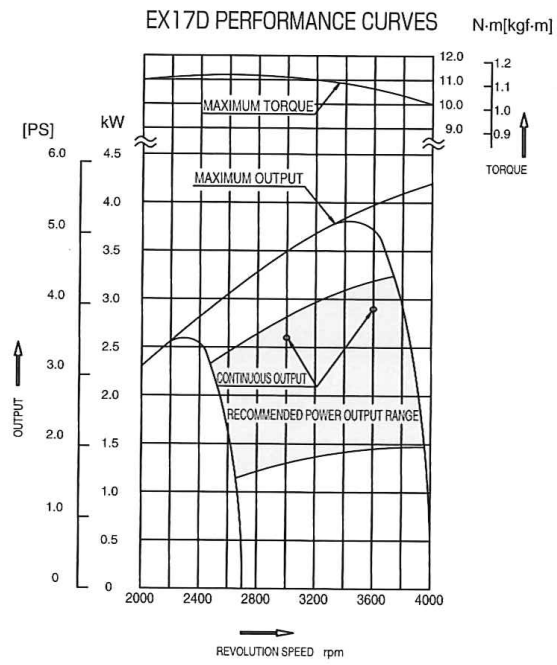

Power curves are corrected to standard sea level atmospheric condition and are developed from test engines equipped with standard air cleaner and muffler.

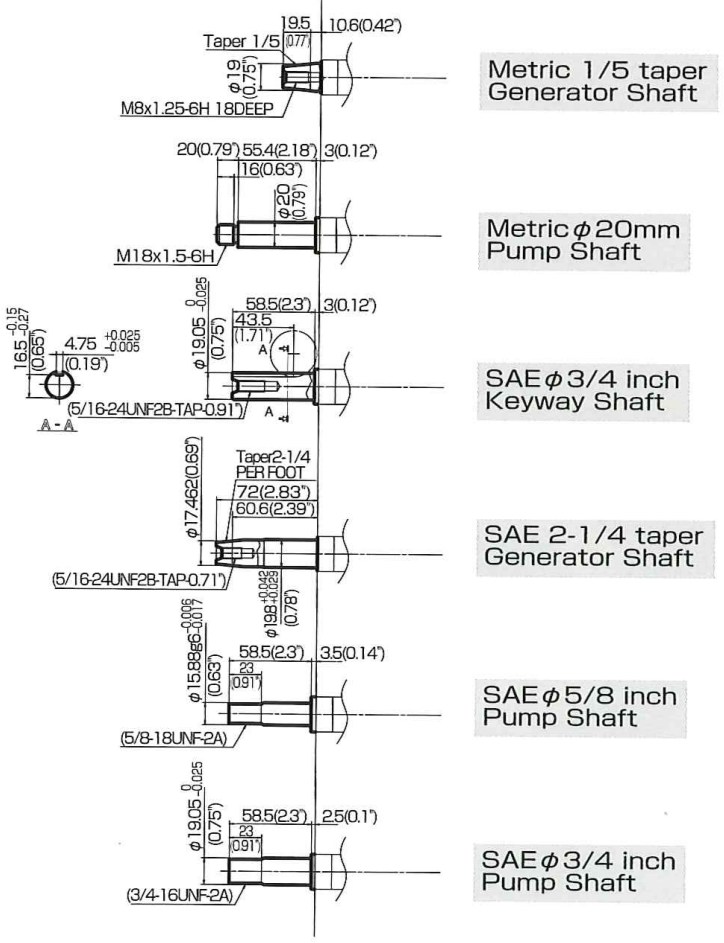

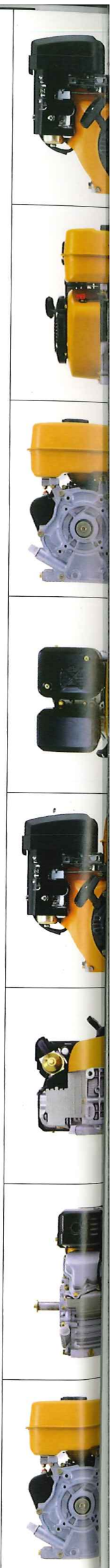

www.famcocorp.com
E-mail: info@famcocorp.com
@famco_group
Tel:۰۲۱-۴۸۰۰۰۰۴۹
Fax:۰۲۱-۴۴۹۹۴۶۴۲
تهران، کیلومتر۲۱ بزرگراه لشگری (جاده مخصوص کرج)
روبـروی پالایشگاه نفت پارس، پلاک ۱۲

FAMCO
هایپرصنعت

EX21-Premium

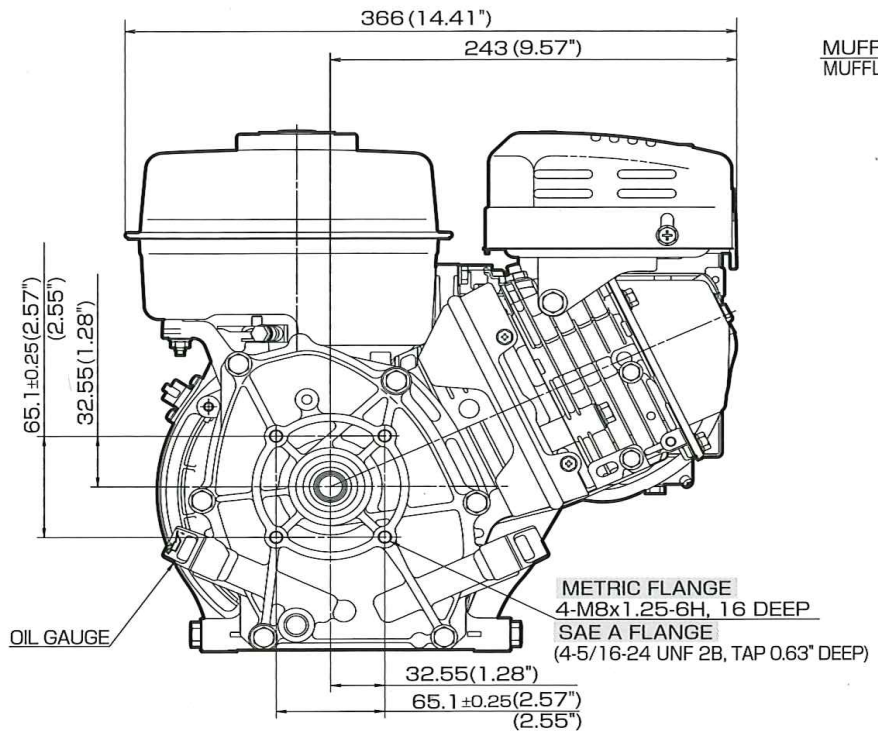

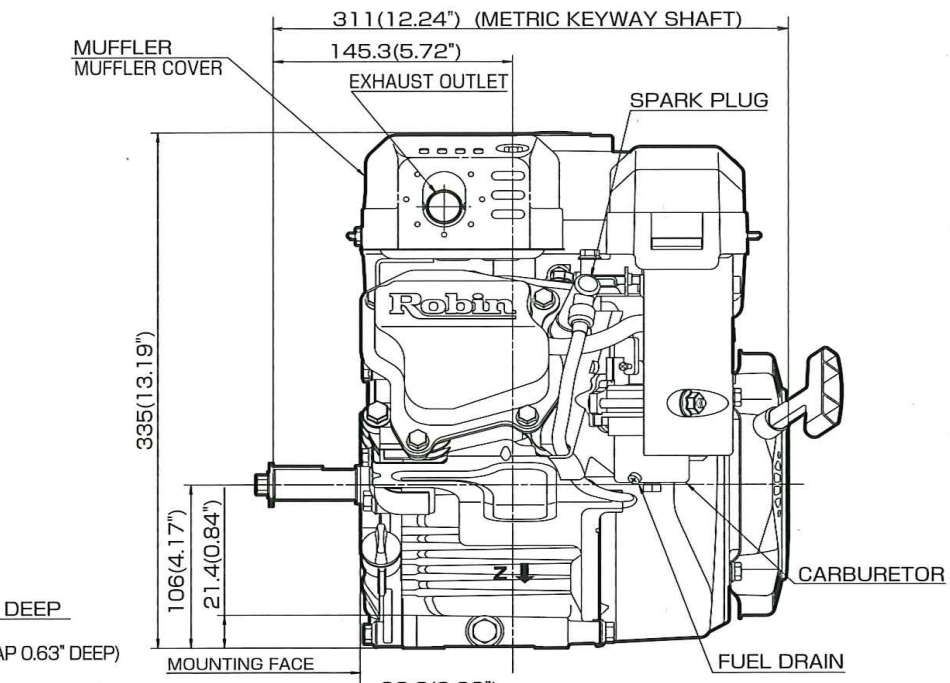

EX21D PERFORMANCE CURVES

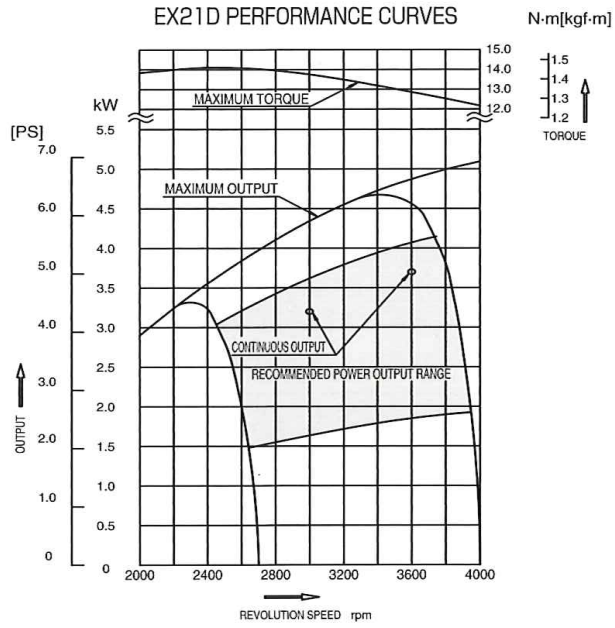

Power curves are corrected to standard sea level atmospheric condition and are developed from test engines equipped with standard air cleaner and muffler.

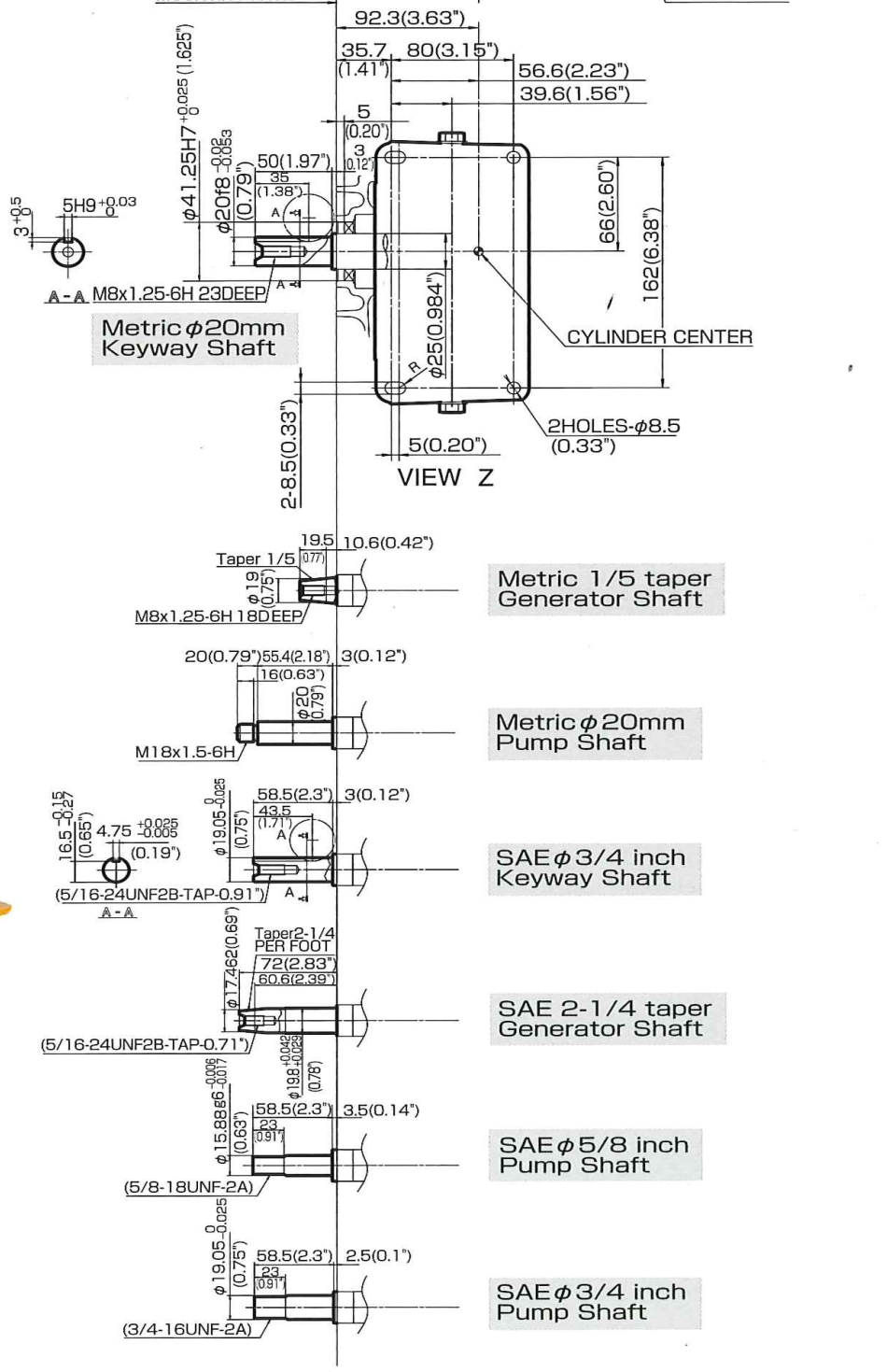

www.famcocorp.com
E-mail: info@famcocorp.com
@famco_group
Tel:۰۲۱-۴۸۰۰۰۰۴۹
Fax:۰۲۱-۴۴۹۹۴۶۴۲
تهران، کیلومتر۲۱ بزرگراه لشگری (جاده مخصوص کرج)
روبـروی پالایشگاه نفت پارس، پلاک ۱۲

FAMCO
هایپرصنعت

EX27-Premium

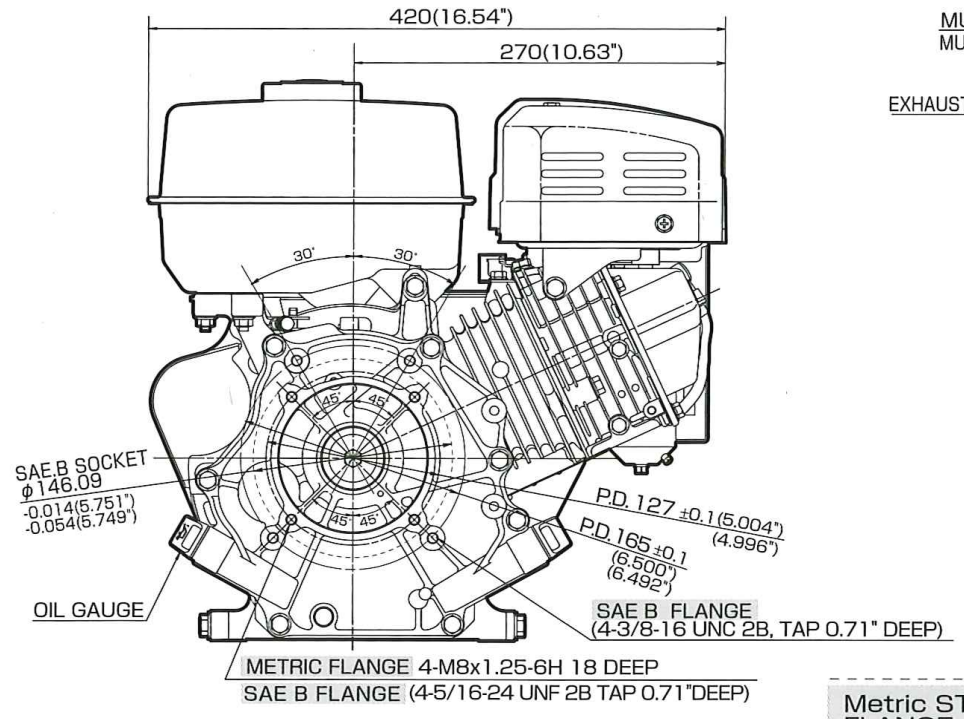

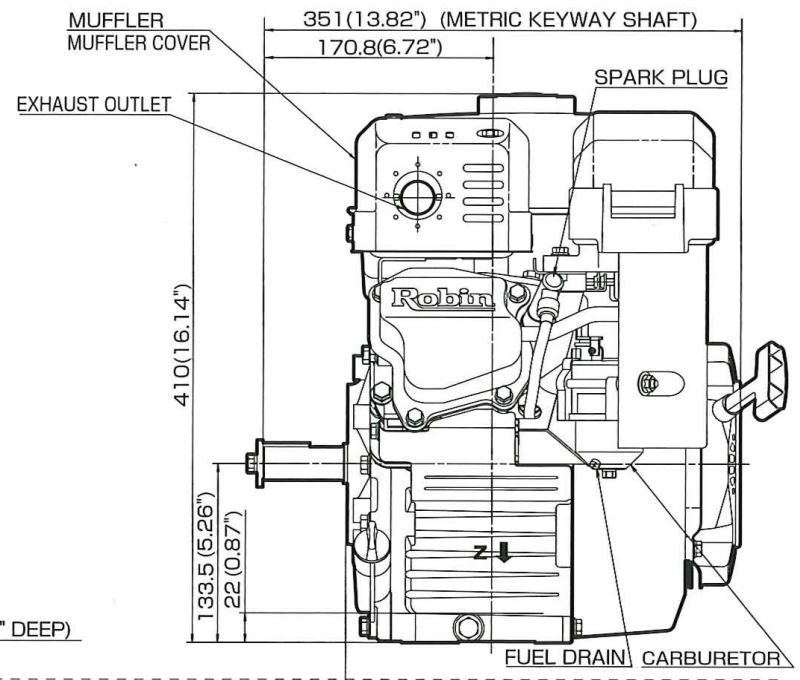

EX27D PERFORMANCE CURVES

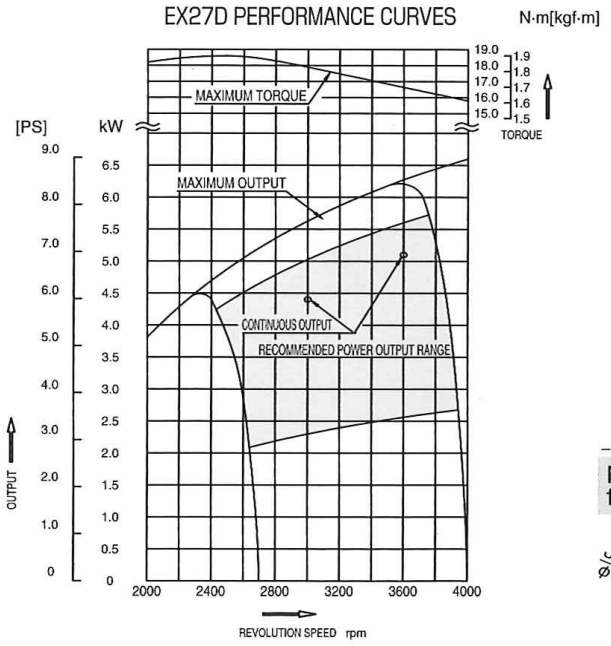

Power curves are corrected to standard sea level atmospheric condition and are developed from test engines equipped with standard air cleaner and muffler.

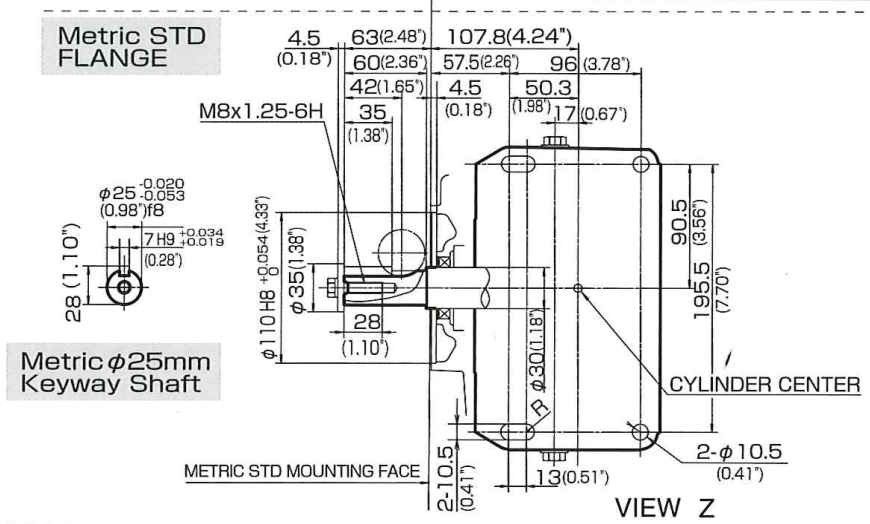

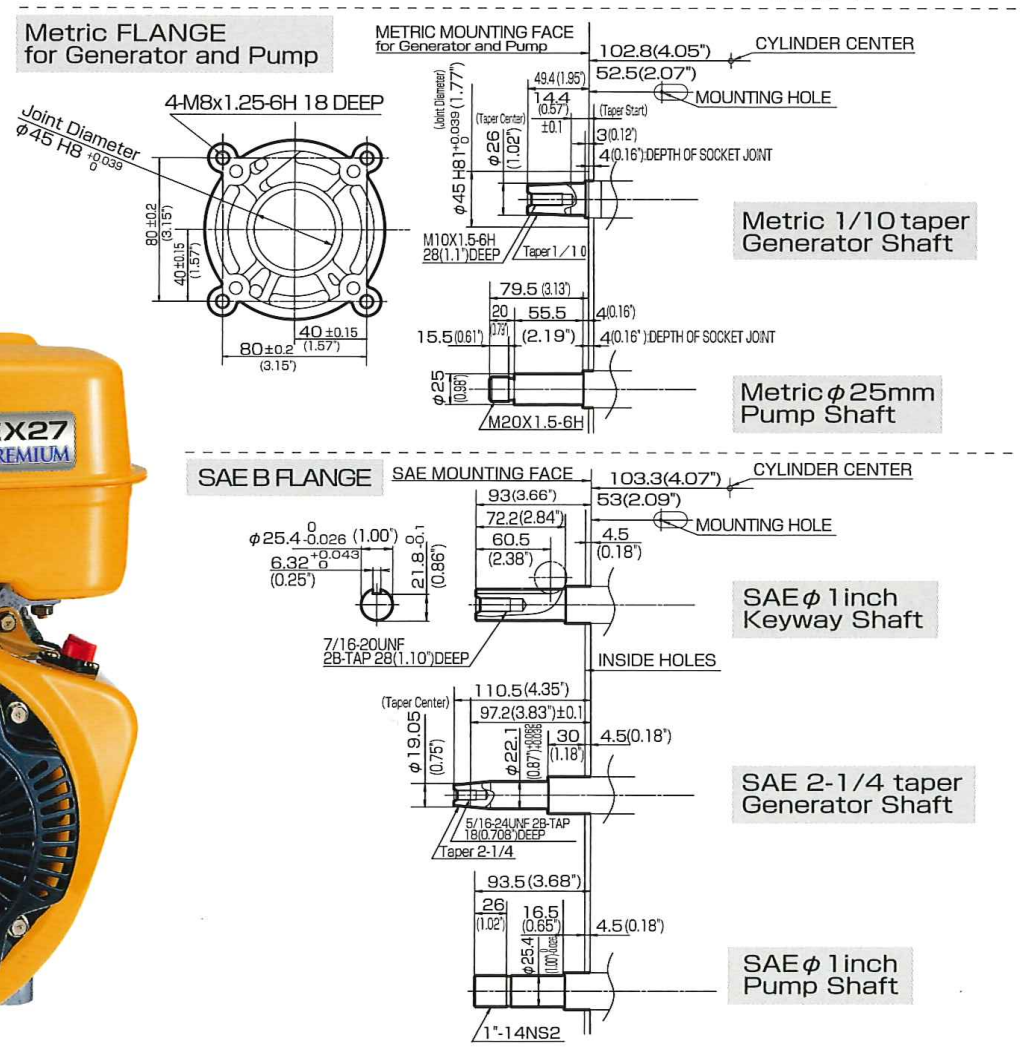

www.famcocorp.com
E-mail: info@famcocorp.com
@famco_group
Tel:۰۲۱-۴۸۰۰۰۰۴۹
Fax:۰۲۱ - ۴۴۹۹۴۶۴۲
تهران، کیلومتر۲۱ بزرگراه لشگری (جاده مخصوص کرج)
روبـروی پالایشگاه نفت پارس، پلاک ۱۲

FAMCO
هایپرصنعت

SPECIFICATIONS

Model	EX13-Premium	EX17-Premium	EX21-Premium	EX27-Premium
Type	Air-cooled, 4-cycle, slant single cylinder, OHC, horizontal PTO shaft			
Bore x Stroke mm (in.)	58 x 48 (2.28x1.89)	67 x 48 (2.64x1.89)	67 x 60 (2.64x2.36)	75 x 60 (2.95x2.36)
Piston displacement ml (cu.in.)	126 (7.69)	169 (10.31)	211 (12.87)	265 (16.17)
Continuous output kW[PS](HP)/rpm	1.9[2.6](2.6)/3000 2.2[3.0](3.0)/3600	2.6[3.5](3.5)/3000 2.9[4.0](4.0)/3600	3.2[4.4](4.4)/3000 3.7[5.0](5.0)/3600	4.4[6.0](6.0)/3000 5.1[7.0](7.0)/3600
Maximum output kW[PS](HP)/rpm	3.2[4.3](4.3)/4000	4.2[5.7](5.7)/4000	5.1[7.0](7.0)/4000	6.6[9.0](9.0)/4000
Maximum torque N・m[kgf・m] (lbf・ft)/rpm	8.1[0.83] (6.01)/2500	11.3[1.15] (8.34)/2500	13.9[1.41] (10.26)/2500	18.6[1.9] (13.74)/2500
Direction of rotation	Counter clockwise as viewed from PTO shaft side			
Fuel	Automobile (unleaded) gasoline			
Fuel Tank capacity liter (US gal.)	2.3 (0.61)	3.2 (0.85)	3.2 (0.85)	5.6(1.48)
Lubricant	Engine oil SAE 10W-30, 20W, 30W			
Lubrication	Mechanical splashing type			
Lubricating Oil capacity liter (US gal.)	0.6 (0.156)			1.0 (0.260)
Carburetor	Float type			
Ignition System	Transistorised			
Spark Plug	NGK BR6HS			
Governor	Centrifugal flyweight type			
Dry weight kg (lb)	14 (30.9)	15 (33.08)	16 (35.28)	21 (46.31)
Dimension length x width x height mm (in.)	297 x 341 x 318 (11.69x13.43x12.52)	304 x 354 x 335 (11.97x13.94x13.19)	311 x 366 x 335 (12.24x14.41x13.19)	351 x 420 x 410 (13.82x16.54x16.14)

OPTIONS

Model	EX13-Premium	EX17-Premium	EX21-Premium	EX27-Premium
Lighting Coil	12V-15W, 40W	12V-15W, 40W, 200W		
Starter STD: Recoil	+350mm Rope	+350mm Rope, + Rotating Screen		
Electric Starter	-	○	○	○
Air Cleaner STD: Semi Dry	Dual Elements, Pre-Cleaner, Oil Bath, Remote			
Muffler	Deflector, Spark Arrestor			
Speed Control STD: Lever	Cable (Remote) Speed Control, High Speed Fix			
Fuel Tank option	+Gauge			
Separate liter (US gal.)	12 (3.17)	12 (3.17)	12 (3.17)	16 (4.23)
Oil Sensor	○	○	○	○
Generator Specification	○	○	○	○

*Generator Specification : Large and low profile Air Cleaner, large and low profile Muffler, Air Guide and Spark Arrestor.
*Specifications are subject to change without notice.

○ : Option available, - : Not available

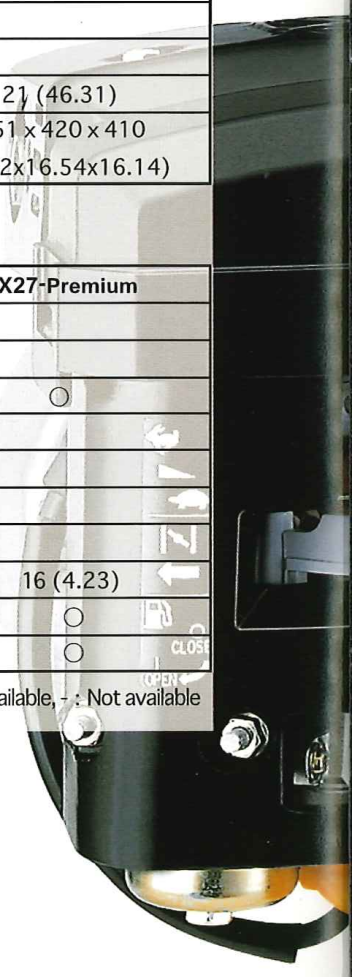

SUBARU

FUJI HEAVY INDUSTRIES LTD.
INDUSTRIAL PRODUCTS COMPANY
1-1-21, Irifune, Chuo-ku, Tokyo 104-0042, Japan
TEL:+81-3-6228-3657 FAX:+81-3-3553-7114
http://www.subaru-robin.jp

ISSUE EMD-EL0201
Printed in Japan 2011. 02 © Ⓨ

www.famcocorp.com
E-mail: info@famcocorp.com
@famco_group
Tel:۰۲۱-۴۸۰۰۰۰۴۹
Fax:۰۲۱ - ۴۴۹۹۴۶۴۲
تهران، کیلومتر۲۱ بزرگراه لشگری (جاده مخصوص کرج)
روبـروی پالایشگاه نفت پارس، پلاک ۱۲