LM Guide®

THK General Catalog

LM Guide

THK General Catalog

A Product Descriptions

Classification Table of the LM Guides ... A1-8

Point of Selection ... A1-10
Flowchart for Selecting an LM Guide ... A1-10
Setting Conditions ... A1-12
- Conditions of the LM Guide ... A1-12

Selecting a Type ... A1-28
- Types of LM Guides ... A1-28

Calculating the Applied Load ... A1-40
- Calculating an Applied Load ... A1-40

Calculating the Equivalent Load ... A1-57
- Rated Load of an LM Guide in Each Direction ... A1-57

Calculating the Static Safety Factor ... A1-61
Calculating the Average Load ... A1-62
Calculating the Nominal Life ... A1-64
- Nominal Life Equation for an LM Guide Using Balls ... A1-64
- Nominal Life Equation for the Oil-Free LM Guide ... A1-64
- Nominal Life Equation for an LM Guide Using Rollers ... A1-65

Predicting the Rigidity ... A1-68
- Selecting a Radial Clearance (Preload) ... A1-68
- Service Life with a Preload Considered ... A1-69
- Rigidity ... A1-69
- Radial Clearance Standard for Each Model ... A1-70

Determining the Accuracy ... A1-73
- Accuracy Standards ... A1-73
- Guidelines for Accuracy Grades by Machine Type ... A1-74
- Accuracy Standard for Each Model ... A1-75

Features and Dimensions of Each Model ... A1-87
Structure and Features of the Caged Ball LM Guide ... A1-88
- Advantages of the Ball Cage Technology ... A1-89

Caged Ball LM Guide Global Standard Size Model SHS ... A1-92
- Structure and Features ... A1-93
- Types and Features ... A1-94

Dimensional Drawing, Dimensional Table
Models SHS-C and SHS-LC ... A1-96
Models SHS-V and SHS-LV ... A1-98
Models SHS-R and SHS-LR ... A1-100
- Standard Length and Maximum Length of the LM Rail ... A1-102
- Tapped-hole LM Rail Type of Model SHS ... A1-103

Caged Ball LM Guide Radial Type Model SSR ... A1-104
- Structure and Features ... A1-105
- Types and Features ... A1-106

Dimensional Drawing, Dimensional Table
Models SSR-XW and SSR-XWM ... A1-108
Models SSR-XV and SSR-XVM ... A1-110
Model SSR-XTB ... A1-112
- Standard Length and Maximum Length of the LM Rail ... A1-114
- Tapped-hole LM Rail Type of Model SSR ... A1-115

Caged Ball LM Guide Ultra-heavy Load Type for Machine Tools Model SVR/SVS ... A1-116
- Structure and Features ... A1-117
- Types and Features ... A1-119

Dimensional Drawing, Dimensional Table
Models SVR-R and SVR-LR ... A1-122
Models SVS-R and SVS-LR ... A1-124
Models SVR-C and SVR-LC ... A1-126
Models SVS-C and SVS-LC ... A1-128
Models SVR-RH, SVR-LRH, SVS-RH and SVS-LRH ... A1-130
Models SVR-CH, SVR-LCH, SVS-CH and SVS-LCH ... A1-132
- Standard Length and Maximum Length of the LM Rail ... A1-134

Caged Ball LM Guide Wide Rail Model SHW ... A1-136
- Structure and Features ... A1-137
- Types and Features ... A1-138

Dimensional Drawing, Dimensional Table
Model SHW-CA ... A1-140
Models SHW-CR and SHW-HR ... A1-142
- Standard Length and Maximum Length of the LM Rail ... A1-144
- Greasing Hole ... A1-145

Caged Ball LM Guide Miniature Type Model SRS ... A1-146
- Structure and Features ... A1-147
- Types and Features ... A1-148
- Flatness of the LM Rail and the LM Block Mounting Surface ... A1-151

Dimensional Drawing, Dimensional Table
Models SRS-S, SRS-M and SRS-N ... A1-152
Models SRS-WS, SRS-WM and SRS-WN ... A1-156
- Standard Length and Maximum Length of the LM Rail ... A1-160

Caged Ball LM Guide Cross LM Guide Model SCR ... A1-162
- Structure and Features ... A1-163
- Types and Features ... A1-164

Dimensional Drawing, Dimensional Table
Model SCR ... A1-166
- Standard Length and Maximum Length of the LM Rail ... A1-168
- Tapped-hole LM Rail Type of Model SCR ... A1-169

Caged Ball LM Guide Finite stroke Model EPF ... A1-170
- Structure and Features ... A1-171

- Types and Features A1-172
- Accuracy of the Mounting Surface A1-173

Dimensional Drawing, Dimensional Table
Model EPF A1-174
- Standard Length of the LM Rail A1-176

LM Guide Global Standard Size Model HSR A1-178
- Structure and Features A1-179
- Types A1-180

Dimensional Drawing, Dimensional Table
Models HSR-A and HSR-AM, Models HSR-LA and HSR-LAM .. A1-184
Models HSR-B, HSR-BM, HSR-LB and HSR-LBM .. A1-186
Model HSR-RM A1-188
Models HSR-R, HSR-RM, HSR-LR and HSR-LRM .. A1-190
Models HSR-YR and HSR-YRM A1-192
Models HSR-CA, HSR-CAM, HSR-HA and HSR-HAM... A1-194
Models HSR-CB, HSR-CBM, HSR-HB and HSR-HBM .. A1-196
Models HSR-HA, HSR-HB and HSR-HR .. A1-198
- Standard Length and Maximum Length of the LM Rail .. A1-200
- Tapped-hole LM Rail Type of Model HSR .. A1-201
- Prevention of LM block from falling off of LM rail ... A1-202
- Greasing Hole A1-202

LM Guide Radial Type Model SR A1-204
- Structure and Features A1-205
- Types and Features A1-206
- Characteristics of Model SR A1-208

Dimensional Drawing, Dimensional Table
Models SR-W, SR-WM, SR-V and SR-VM .. A1-210
Models SR-TB, SR-TBM, SR-SB and SR-SBM .. A1-212
- Standard Length and Maximum Length of the LM Rail .. A1-214
- Tapped-hole LM Rail Type of Model SR... A1-215

LM Guide Ultra-heavy Load Type for Machine Tools Model NR/NRS-X.. A1-216
- Structure and Features A1-217
- Types and Features A1-218

Dimensional Drawing, Dimensional Table
Models NR-RX, NR-LRX, NR-R and NR-LR .. A1-222
Models NRS-RX, NRS-LRX, NRS-R and NRS-LR.. A1-224
Models NR-CX and NR-LCX A1-226
Models NRS-CX and NRS-LCX A1-228
Models NR-A, NR-LA, NRS-A and NRS-LA .. A1-230
Models NR-B, NR-LB, NRS-B and NRS-LB .. A1-232
- Standard Length and Maximum Length of the LM Rail .. A1-234

LM Guide Wide Rail Model HRW A1-236
- Structure and Features A1-237
- Types and Features A1-238

Dimensional Drawing, Dimensional Table
Models HRW-CA and HRW-CAM A1-240
Models HRW-CR, HRW-CRM and HRW-LRM .. A1-242
- Standard Length and Maximum Length of the LM Rail .. A1-244
- Prevention of LM block from falling off of LM rail ... A1-244

LM Guide Miniature Types Model RSR .. A1-246
- Structure and Features A1-247
- Types and Features A1-248
- Accuracy of the Mounting Surface A1-250

Dimensional Drawing, Dimensional Table
Models RSR-M, RSR-N, RSR-WM, RSR-WN and RSR-WVM .. A1-252
- Standard Length and Maximum Length of the LM Rail .. A1-254
- Prevention of LM block from falling off of LM rail ... A1-254

LM Guide Separate Type (4-way Equal Load) Model HR A1-256
- Structure and Features A1-257
- Types and Features A1-258
- Example of Clearance Adjustment A1-259
- Comparison of Model Numbers with Cross-roller Guides .. A1-260

Dimensional Drawing, Dimensional Table
Models HR, HR-T, HR-M and HR-TM.... A1-262
- Standard Length and Maximum Length of the LM Rail .. A1-266
- Accessories A1-267
- Greasing Hole A1-268

LM Guide Separate Type (Radial) Model GSR ... A1-270
- Structure and Features A1-271
- Types and Features A1-272
- Example of Clearance Adjustment A1-273

Dimensional Drawing, Dimensional Table
Models GSR-T and GSR-V A1-274
- Standard Length and Maximum Length of the LM Rail .. A1-276
- Tapped-hole LM Rail Type of Model GSR .. A1-276

LM Guide Separate Type (Radial) Model GSR-R ... A1-278
- Structure and Features A1-279
- Types and Features A1-280

Dimensional Drawing, Dimensional Table
Model GSR-R A1-282
- Standard Length of the LM Rail A1-284

- Rack and Pinion A1-285
- Rack and Pinion Dimensional Drawing.... A1-288

LM Guide Cross LM Guide Model CSR .. A1-290
- Structure and Features A1-291
- Types and Features A1-292

Dimensional Drawing, Dimensional Table
Model CSR A1-294
- Standard Length and Maximum Length of the LM Rail .. A1-296
- Tapped-hole LM Rail Type of Model CSR .. A1-297

LM Guide Miniature Cross Guide Model MX.... A1-298
- Structure and Features A1-299
- Types and Features A1-299

Dimensional Drawing, Dimensional Table
Model MX A1-300
- Standard Length and Maximum Length of the LM Rail .. A1-302

LM Guide Structural Member Rail Model JR.... A1-304
- Structure and Features A1-305
- Second Moment of Inertia of the LM Rail .. A1-305
- Types and Features A1-306

Dimensional Drawing, Dimensional Table
Models JR-A, JR-B and JR-R..... A1-308
- Standard Length and Maximum Length of the LM Rail .. A1-310
- Model JB frame for LM rail clamps..... A1-311
- Model JT steel plate for LM rail clamps... A1-311

LM Guide R Guide Model HCR A1-312
- Structure and Features A1-313
- Types and Features A1-314

Dimensional Drawing, Dimensional Table
R Guide Model HCR..... A1-316

LM Guide Straight-Curved Guide Model HMG.... A1-318
- Structure and Features A1-319
- Types and Features A1-321
- Examples of Table Mechanisms A1-322

Dimensional Drawing, Dimensional Table
Model HMG A1-324
- Jointed LM rail..... A1-326

LM Guide Self-aligning Type Model NSR-TBC ... A1-328
- Structure and Features A1-329
- Types and Features A1-329

Dimensional Drawing, Dimensional Table
Model NSR-TBC..... A1-330
- Standard Length and Maximum Length of the LM Rail .. A1-332

LM Guide High Temperature Type Model HSR-M1 ... A1-334
- Structure and Features A1-335
- Types and Features A1-337
- Service Life..... A1-338

Dimensional Drawing, Dimensional Table
Models HSR-M1A and HSR-M1LA..... A1-340
Models HSR-M1B and HSR-M1LB..... A1-342
Models HSR-M1R and HSR-M1LR A1-344
Model HSR-M1YR..... A1-346
- Standard Length and Maximum Length of the LM Rail .. A1-348

LM Guide High Temperature Type Model SR-M1.... A1-350
- Structure and Features A1-351
- Thermal Characteristics of LM Rail and LM Block Materials .. A1-351
- Types and Features A1-352
- Service Life..... A1-353

Dimensional Drawing, Dimensional Table
Models SR-M1W and SR-M1V..... A1-354
Models SR-M1TB and SR-M1SB A1-356
- Standard Length and Maximum Length of the LM Rail .. A1-358

LM Guide High Temperature Type Model RSR-M1 ... A1-360
- Structure and Features A1-361
- Thermal Characteristics of LM Rail and LM Block Materials .. A1-361
- Types and Features A1-362
- Service Life..... A1-363

Dimensional Drawing, Dimensional Table
Models RSR-M1K, RSR-M1V and RSR-M1N .. A1-364
Models RSR-M1WV and RSR-M1WN... A1-366
- Standard Length and Maximum Length of the LM Rail .. A1-368
- Prevention of LM block from falling off of LM rail ... A1-368

LM Guide High Corrosion Resistance Type Model HSR-M2 .. A1-370
- Structure and Features A1-371
- Types and Features A1-371

Dimensional Drawing, Dimensional Table
Model HSR-M2A..... A1-372
- Standard Length and Maximum Length of the LM Rail .. A1-374

LM Guide Medium-to-low Vacuum Type Model HSR-M1VV ... A1-376
- Structure and Features ... A1-377
- Types and Features ... A1-378
- Precautions on Design ... A1-378

Dimensional Drawing, Dimensional Table
Model HSR-M1VV ... A1-380
- Standard Length and Maximum Length of the LM Rail .. A1-382

LM Guide Oil-Free for Special Environments Model SR-MS ... A1-384
- Structure and Features ... A1-385
- Types and Features ... A1-387

Dimensional Drawing, Dimensional Table
Models SR-MSV and SR-MSW ... A1-388
- Standard Length and Maximum Length of the LM Rail .. A1-390

Structure and Features of the Caged Roller LM Guide .. A1-392
- Advantages of the Caged Roller Technology .. A1-393

Caged Roller LM Guide Ultra-high Rigidity Type Model SRG ... A1-396
- Structure and Features ... A1-397
- Types and Features ... A1-398
- Error Allowance of the Mounting Surface .. A1-401

Dimensional Drawing, Dimensional Table
Models SRG-A, SRG-LA, SRG-C and SRG-LC .. A1-402
Models SRG-C, SRG-LC and SRG-SLC ... A1-404
Model SRG-LC ... A1-406
Models SRG-V, SRG-LV, SRG-R and SRG-LR ... A1-408
Models SRG-V, SRG-LV, SRG-SLV, SRG-R, SRG-LR and SRG-SLR.. A1-410
- Standard Length and Maximum Length of the LM Rail .. A1-412
- Plate Cover ... A1-413
- Greasing Hole ... A1-413

Caged Roller LM Guide Ultra-high Rigidity Type (Low Center of Gravity) Model SRN.. A1-416
- Structure and Features ... A1-417
- Types and Features ... A1-418
- Error Allowance of the Mounting Surface .. A1-419

Dimensional Drawing, Dimensional Table
Models SRN-C and SRN-LC ... A1-420
Models SRN-R and SRN-LR ... A1-422
- Standard Length and Maximum Length of the LM Rail .. A1-424
- Plate Cover ... A1-425
- Greasing Hole ... A1-425

Caged Roller LM Guide Ultra-high Rigidity Type (Wide) Model SRW ... A1-426
- Structure and Features ... A1-427
- Types and Features ... A1-428
- Permissible Error of the Mounting Surface .. A1-429

Dimensional Drawing, Dimensional Table
Model SRW-LR ... A1-430
- Standard Length and Maximum Length of the LM Rail .. A1-432
- Greasing Hole ... A1-433

Point of Design ... A1-434
Designing the Guide System ... A1-434
- Examples of Arrangements of the Guide System .. A1-435
- Method for Securing an LM Guide to Meet the Conditions .. A1-439

Designing a Mounting Surface ... A1-441
- Designing a Mounting Surface ... A1-441
- Shoulder Height of the Mounting Base and the Corner Radius .. A1-443
- Permissible Error of the Mounting Surface .. A1-450
- Marking on the Master LM Guide and Combined Use .. A1-455

Options ... A1-457
Table of Supported Options by Models .. A1-458
Seal and Metal scraper ... A1-462
Laminated Contact Scraper LaCS ... A1-464
Side Scraper ... A1-466
Protector ... A1-467
Light-Resistance Contact Seal LiCS ... A1-469
Dimensions of Each Model with an Option Attached .. A1-470
- The LM Block Dimension (Dimension L) with LaCS and Seals Attached .. A1-470
- Incremental Dimension with Grease Nipple (When LaCS is Attached)... A1-478
- LM Block Dimension (Dimension L) with LiCS Attached .. A1-480
- Incremental Dimension with Grease Nipple (When LiCS is Attached) .. A1-481
- Maximum Seal Resistance ... A1-482
- Maximum resistance for LaCS ... A1-485
- Maximum resistance for LiCS ... A1-486
- Maximum resistance for the side scraper .. A1-486

QZ Lubricator ... A1-487
- LM Block Dimension (Dimension L) with QZ Attached .. A1-490

List of Parts Symbols ... A1-494
Dedicated Bellows ... A1-497
- Bellows ... A1-498

Dedicated LM Cover ... A1-510
- LM Cover ... A1-511

Cap C ... A1-512
Cap GC ... A1-513
Plate Cover SV Steel Tape SP ... A1-516
Lubrication Adapter ... A1-519
Removing/mounting Jig ... A1-520
End Piece EP ... A1-521

Model No. ... A1-522

- Model Number Coding A1-522
- Notes on Ordering A1-526

Precautions on Use A1-528

Precautions on Using the LM Guide A1-528

Precautions on Handling the LM Guide for Special Environment .. A1-530

- LM Guide for Medium-to-Low Vacuum A1-530
- Oil-Free LM Guide A1-530

Precautions on Using Options for the LM Guide .. A1-531

- QZ Lubricator for the LM Guide A1-531
- Laminated Contact Scraper LaCS, Side Scraper for LM Guides .. A1-531
- Light Contact Seal LiCS for LM Guides ... A1-532
- Cap GC A1-532

B Support Book (Separate)

Features and Types B1-8
Features of the LM Guide B1-8
- Large Permissible Load and High Rigidity .. B1-9
- High Precision of Motion B1-11
- Accuracy Averaging Effect by Absorbing Mounting Surface Error .. B1-14
- Easy Maintenance B1-16
- Substantial Energy Savings B1-17
- Low Total Cost B1-18
- Ideal Four Raceway, Circular-Arc Groove, Two-Point Contact Structure .. B1-19
- Superb Error-Absorbing Capability with the DF Design .. B1-23

Classification Table of the LM Guides ... B1-24

Point of Selection B1-26
Flowchart for Selecting an LM Guide B1-26
Setting Conditions B1-28
- Conditions of the LM Guide B1-28

Selecting a Type B1-44
- Types of LM Guides B1-44

Calculating the Applied Load B1-56
- Calculating an Applied Load B1-56
- Example of calculation B1-59

Calculating the Equivalent Load B1-66
- Rated Load of an LM Guide in Each Direction .. B1-66

Calculating the Static Safety Factor B1-68
Calculating the Average Load B1-69
- Example of Calculating the Average Load (1)
  - with Horizontal Mount and Acceleration/Deceleration Considered - .. B1-71
- Example of Calculating the Average Load (2)
  - When the Rails are Movable B1-72

Calculating the Nominal Life B1-73
- Nominal Life Equation for an LM Guide Using Balls .. B1-73
- Nominal Life Equation for the Oil-Free LM Guide .. B1-73
- Nominal Life Equation for an LM Guide Using Rollers .. B1-74
- Example of Calculating the Nominal Life (1)
  - with Horizontal Mount and High-speed Acceleration .. B1-77
- Example of Calculating the Nominal Life (2)
  - with Vertical Mount B1-82

Predicting the Rigidity B1-85
- Selecting a Radial Clearance (Preload) ... B1-85
- Service Life with a Preload Considered ... B1-86
- Rigidity B1-86

Determining the Accuracy B1-87
- Accuracy Standards B1-87
- Guidelines for Accuracy Grades by Machine Type .. B1-88

Mounting Procedure and Maintenance .. B1-89
Mounting the LM Guide B1-89
- Marking on the Master LM Guide and Combined Use .. B1-89
- Mounting Procedure B1-91
- Methods for Measuring Accuracy after Installation .. B1-101
- Recommended Tightening Torque for LM Rails .. B1-101

Options B1-103
Seal and Metal scraper B1-104
Laminated Contact Scraper LaCS B1-106
Side Scraper B1-108
Protector B1-109
Light-Resistance Contact Seal LiCS B1-110
Dedicated bellows B1-111
Dedicated LM Cover B1-111
Cap C B1-112
Cap GC B1-113
Plate Cover SV Steel Tape SP B1-115
QZ Lubricator B1-118
Lubrication Adapter B1-121
Removing/mounting Jig B1-122
End Piece EP B1-123

Model No. B1-124
- Model Number Coding B1-124
- Notes on Ordering B1-128

Precautions on Use B1-130
Precautions on Using the LM Guide B1-130
Precautions on Handling the LM Guide for Special Environment .. B1-132
- LM Guide for Medium-to-Low Vacuum B1-132
- Oil-Free LM Guide B1-132

Precautions on Using Options for the LM Guide .. B1-133
- QZ Lubricator for the LM Guide B1-133
- Laminated Contact Scraper LaCS, Side Scraper for LM Guides .. B1-133
- Light Contact Seal LiCS for LM Guides ... B1-134
- Cap GC B1-134

Classification Table of the LM Guides

LM Guide

Ball Guide

Caged Ball Type

Standard Type
- Model SHS — Global Standard Size
- Model SSR — Radial

Wide Type
- Model SHW — Low Center of Gravity

Miniature Type
- Model SRS — Lightweight and Compact
- Model EPF — Finite stroke

Cross Type
- Model SCR — 4-way Equal Load

Full-ball Type

Standard Type
- Model HSR — 4-way Equal Load
- Model NSR-TBC — Self-aligning
- Model SR — Radial

Miniature Type
- Model RSR — Ultra Compact

Wide Type
- Model HRW — Wide Rail, 4-way Equal Load

Optimal for Machine Tools
- Model SVR — High Contamination Resistance, Ball cage, Radial
- Model SVS — High Contamination Resistance, Ball cage, 4-way
- Model NR-X — Radial
- Model NRS-X — 4-way
- Model SRG — Ultra-high Rigidity, Caged roller, 4-way
- Model SRW — Ultra-high Rigidity, Caged roller, Wide Rail

Roller Guide

With a Caged Roller

Standard Type

Model SRG
Ultra-high Rigidity

Model SRN
Ultra-high Rigidity
Low Center of Gravity

Wide Type

Model SRW
Ultra-high Rigidity

Separate Type

Model HR
Heavy Load

Model GSR
Interchangeable, Self-aligning

Model GSR-R
Interchangeable, Self-aligning
With Rack

Model JR Type

Model JR
Structural Member Rail
4-way Equal Load

Cross Type

Model CSR
4-way Equal Load

Model MX
Miniature Cross

Special Environment Types

Model HSR-M1
High Temperature
4-way Equal Load

Model SR-M1
High Temperature
Radial

Model HSR-M2
High Corrosion Resistance
4-way Equal Load

Model RSR-M1
High Temperature

Model HSR-M1VV
Medium-to-Low Vacuum

Model SR-MS
Oil-Free

R Guide Type

Model HCR

Straight-Curved Type

Model HMG

Flowchart for Selecting an LM Guide

[Steps for Selecting an LM Guide]

The following flowchart can be used as reference for selecting an LM Guide.

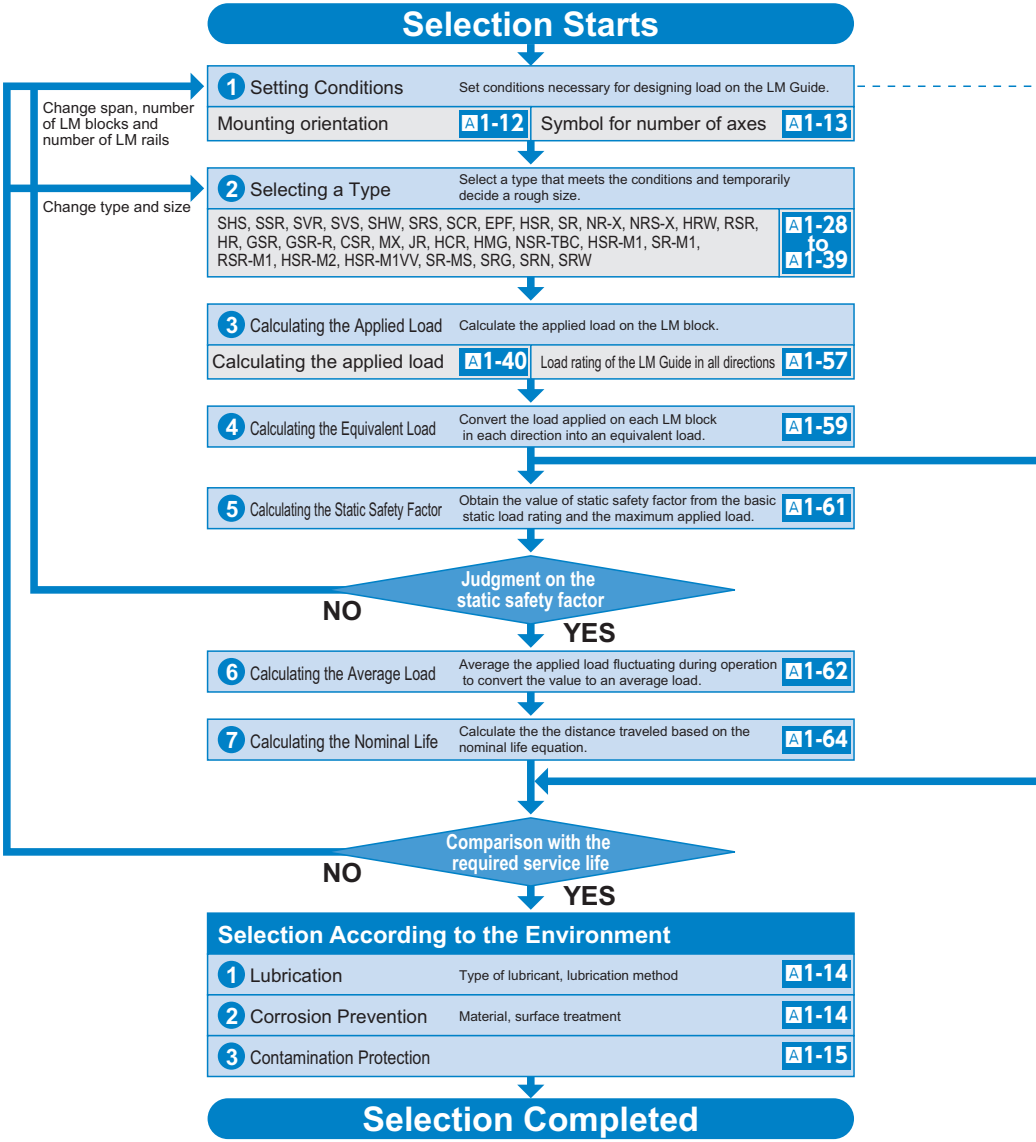

- Space in the guide section
- Dimensions (span, number of LM blocks, number of LM rails, thrust)
- Installation direction (horizontal, vertical, slant mount, wall mount, suspended)
- Magnitude, direction and position of the working load
- Operating frequency (duty cycle)
- Speed (acceleration)
- Stroke length
- Required service life
- Precision of motion
- Environment
- In a special environment (vacuum, clean room, high temperature, environment exposed to contaminated environment, etc.), it is necessary to take into account material, surface treatment, lubrication and contamination protection.

Prediction the Rigidity

1. Selecting a Radial Clearance (Preload) A1-68
2. Service Life with a Preload Considered A1-69
3. Rigidity A1-69
4. Radial Clearance Standard for Each Model A1-70
5. Designing the Guide System A1-434

Determining the Accuracy

1. Accuracy Standards A1-73
2. Guidelines for Accuracy Grades by Machine Type A1-74
3. Accuracy Standard for Each Model A1-75~

Setting Conditions

Conditions of the LM Guide

[Mounting Orientation]

The LM Guide can be mounted in the following five orientations.
If the mounting orientation of the LM Guide is other than horizontal use, the lubricant may not reach the raceway completely.
Be sure to let THK know the mounting orientation and the exact position in each LM block where the grease nipple or the piping joint should be attached.
For the lubrication, see A24-2.

[Mounting Orientation]

Horizontal (symbol: H)	Inverted (symbol: R)	Wall mount (symbol: K)
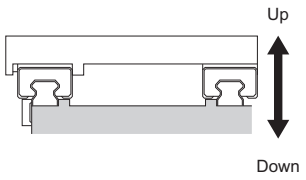	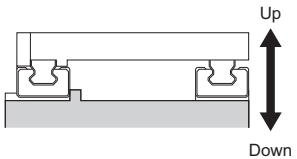	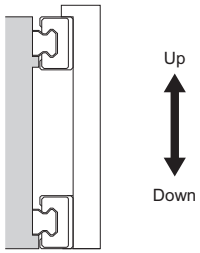

Vertical (symbol: V)	Slant mount (symbol: T)
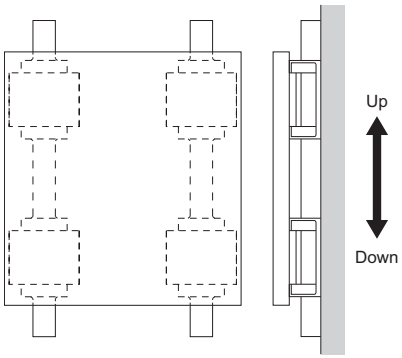	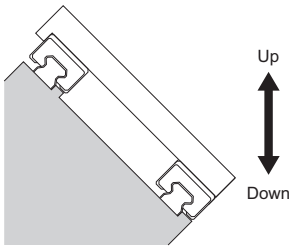

[Symbol for Number of Axes]

If two or more units of the LM Guide are parallelly used in combination on the same plane, specify the number of the LM rails (symbol for number of axes) used in combination in advance.
(For accuracy standards and radial clearance standards, see A1-75 and A1-70, respectively.)

Model number coding

SHS25C2SSCO+1000LP -Ⅱ

Model number (details are given on the corresponding page of the model)

Symbol for number of axes
("II" indicates 2 axes. No symbol for a single axis)

[Symbol for Number of Axes]

Symbol for number of axes: none	Symbol for number of axes: Ⅱ	Symbol for number of axes: Ⅱ
Required number of axes: 1	**Required number of axes: 2**	**Required number of axes: 2**
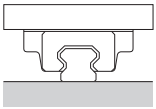	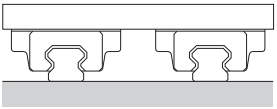 Note: When placing an order, specify the number in multiple of 2 axes.	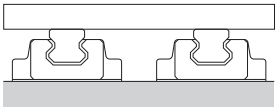 Note: When placing an order, specify the number in multiple of 2 axes.
Symbol for number of axes: Ⅲ	**Symbol for number of axes: Ⅳ**	**Other**
Required number of axes: 3	**Required number of axes: 4**	**Required number of axes: 2**
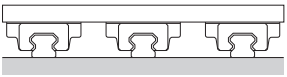 Note: When placing an order, specify the number in multiple of 3 axes.	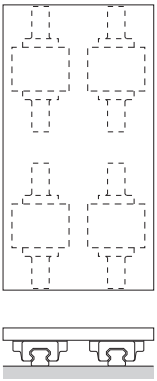 Note: When placing an order, specify the number in multiple of 4 axes.	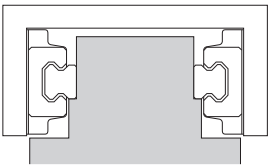 Using 2 axes opposed to each other

[Service environment]

● **Lubrication**

When using an LM system, it is necessary to provide effective lubrication. Without lubrication, the rolling elements or the raceway may be worn faster and the service life may be shortened.
A lubricant has effects such as the following.
(1) Minimizes friction in moving elements to prevent seizure and reduce wear.
(2) Forms an oil film on the raceway to decrease stress acting on the surface and extend rolling fatigue life.
(3) Covers the metal surface to prevent rust formation.
To fully bring out the LM Guide's functions, it is necessary to provide lubrication according to the conditions.
If the mounting orientation is other than horizontal use, the lubricant may not reach the raceway completely.
Be sure to let THK know the mounting orientation and the exact position in each LM block where the grease nipple or the piping joint should be attached. For the mounting orientations of LM Guides, see A1-12. For the lubrication, see A24-2.
Even with an LM Guide with seals, the internal lubricant gradually seeps out during operation. Therefore, the system needs to be lubricated at an appropriate interval according to the service conditions.

● **Corrosion Prevention**

■Determining a Material

Any LM system requires a material that meets the environments. For use in environments where corrosion resistance is required, some LM system models can use martensite stainless steel.
(Martensite stainless steel can be used for LM Guide models SSR, SHW, SRS, HSR, SR, HRW, RSR and HR.)
The HSR series includes HSR-M2, a highly corrosion resistant LM Guide using austenite stainless steel, which has high anti-corrosive effect. For details, see A1-370.

■Surface Treatment

The surfaces of the rails and shafts of LM systems can be treated for anti-corrosive or aesthetic purposes.
THK offers THK-AP treatment, which is the optimum surface treatment for LM systems.
There are roughly three types of THK-AP treatment: AP-HC, AP-C and AP-CF. (See B0-20.)

● Contamination Protection

When foreign material enters an LM system, it will cause abnormal wear or shorten the service life, and it is necessary to prevent foreign material from entering the system. When entrance of foreign material is predicted, it is important to select an effective sealing device or dust-control device that meets the environment conditions.

THK offers contamination protection accessories for LM Guides by model number, such as end seals made of special synthetic rubber with high wear resistance, and side seals and inner seals for further increasing dust-prevention effect.

In addition, for locations with adverse environment, Laminated Contact Scraper LaCS and dedicated bellows are available by model number. Also, THK offers dedicated caps for LM rail mounting holes, designed to prevent cutting chips from entering the LM rail mounting holes.

When it is required to provide contamination protection for a Ball Screw in an environment exposed to cutting chips and moisture, we recommend using a telescopic cover that protects the whole system or a large bellows.

For the options, see A1-462.

[Special environments]

Clean Room

In a clean environment generation of dust from the LM system has to be reduced and anti-rust oil cannot be used. Therefore, it is necessary to increase the corrosion resistance of the LM system. In addition, depending on the level of cleanliness, a dust collector is required.

Dust Generation from the LM System

■Measure to Prevent Dust Generation Resulting from Flying Grease

THK AFE-CA and AFF Grease
Use environmentally clean grease that produces little dust.

■Measure to Reduce Dust Generation Resulting from Metallic Abrasion Dust

Caged Ball LM Guide
Use the Caged Ball LM Guide, which has no friction between balls and generates little metallic abrasion dust, to allow generation of dust to be minimized.

Corrosion Prevention

■Material-based Measure

Stainless Steel LM Guide
This LM Guide uses martensite stainless steel, which has corrosion resistant effect.

Highly Corrosion Resistant LM Guide
It uses austenite stainless steel, which has a high corrosion resistant effect, in its LM rail.

■Measure Through Surface Treatment

THK AP-HC, AP-C and AP-CF Treatment
The LM system is surface treated to increase corrosion resistance.

Caged Ball LM Guide
Supported models: SHS SSR SVR/SVS SHW SRS SCR EPF

Caged Roller LM Guide
Supported models: SRG SRN SRW

Stainless Steel LM Guide
Supported models: SSR SHW SRS HSR SR HRW HR RSR

LM Guides for Special Environment
Supported models: High Corrosion Resistance HSR-M2, Oil-Free SR-MS

Surface Treatment

Grease

SHS
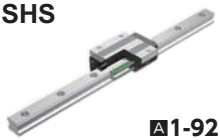
A1-92

SSR
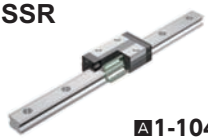
A1-104

SVR/SVS

A1-116

SHW
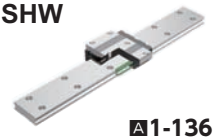
A1-136

SRS
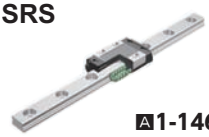
A1-146

SCR
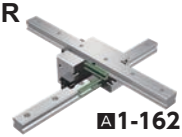
A1-162

EPF
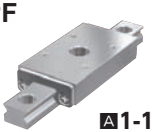
A1-170

SRG

A1-396

SRN

A1-416

SRW
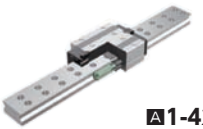
A1-426

SSR
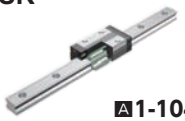
A1-104

SHW
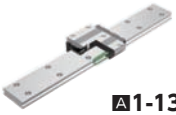
A1-136

SRS
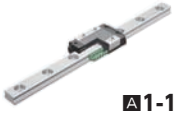
A1-146

HSR

A1-178

SR

A1-204

HRW

A1-236

HR

A1-256

RSR

A1-246

HSR-M2

A1-370

SR-MS

A1-384

THK AP-HC Treatment
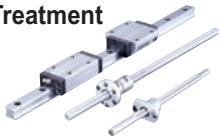
B0-20

THK AFE-CA Grease

A24-12

THK AFF Grease

A24-14

Vacuum

In a vacuum environment, measures are required to prevent gas from being emitted from a resin and the scattering of grease. Anti-rust oil cannot be used, therefore, it is necessary to select a product with high corrosion resistance.

■Measure to Prevent Emission of Gas from Resin

Stainless Steel LM Guide

The endplate (ball circulation path normally made of resin) of the LM block is made of stainless steel to reduce emission of gas.

■Measure to Prevent Grease from Evaporating

Vacuum Grease

If a general-purpose grease is used in a vacuum environment, oil contained in the grease evaporates and the grease looses lubricity. Therefore, use a vacuum grease that uses fluorine based oil, whose vapor pressure is low, as the base oil.

■Corrosion Prevention

Stainless Steel LM Guide

In a vacuum environment, use a stainless steel LM Guide, which is highly corrosion resistant.

High Temperature LM Guide

If high temperature is predicted due to baking, use a High Temperature LM Guide, which is highly resistant to heat and corrosion.

■Highly Corrosion Resistant LM Guide

This LM Guide uses austenite stainless steel, which has a high anti-corrosion effect, in the LM rail.

Oil-Free

In environments susceptible to liquid lubricants, a lubrication method other than grease or oil is required.

■Dry Lubricant

Dry Lubrication S-Compound Film

Dry Lubrication S-Compound Film is a fully dry lubricant developed for use under atmospheric to high-vacuum environments.
It has superior characteristics in load carrying capacity, wear resistance and sealability to other lubrication systems.

High Temperature LM Guide

Supported models: HSR-M1 SR-M1 RSR-M1

LM Guides for Special Environment

Supported models: For Medium-to-Low Vacuum HSR-M1VV
Oil-Free SR-MS

Highly Corrosion Resistant LM Guide

Stainless Steel LM Guide

Supported models: HSR SR HRW HR RSR

Vacuum Grease

Oil-Free LM Guide

HSR-M1

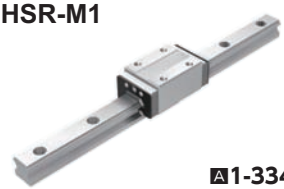

A1-334

SR-M1

A1-350

RSR-M1

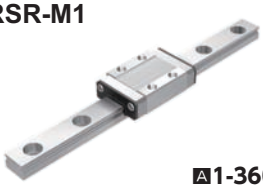

A1-360

HSR-M1VV

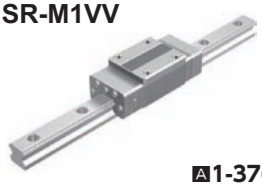

A1-376

SR-MS

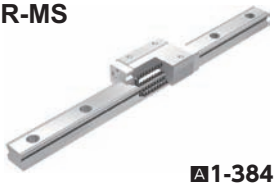

A1-384

HSR-M2

A1-370

HSR

A1-178

SR

A1-204

HRW

A1-236

HR

A1-256

RSR

A1-246

SR-MS

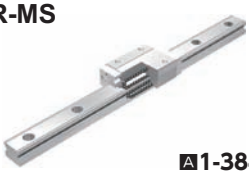

A1-384

Corrosion Prevention

As with clean room applications, it is necessary to increase corrosion resistance through material selection and surface treatment.

■Material-based Measure

Stainless Steel LM Guide

This LM Guide uses martensite stainless steel, which has an anti-corrosion effect.

Highly Corrosion Resistant LM Guide

It uses austenite stainless steel, which has a high anti-corrosion effect, in its LM rail.

■Measure Through Surface Treatment

THK AP-HC, AP-C and AP-CF Treatment

The LM system is surface treated to increase corrosion resistance.

Stainless Steel LM Guide

Supported models: SSR SHW SRS HSR SR HRW HR RSR

Highly Corrosion Resistant LM Guide

Surface Treatment

SSR 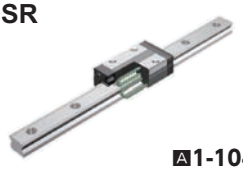 A1-104	SHW 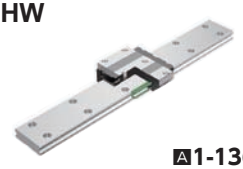 A1-136	SRS A1-146
HSR 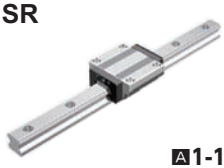 A1-178	SR A1-204	HRW 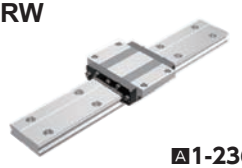 A1-236
HR A1-256	RSR A1-246	

HSR-M2

A1-370

THK AP-HC Treatment

B0-20

THK AP-C Treatment

B0-20

THK AP-CF Treatment

B0-20

High Speed

In a high speed environment, it is necessary to apply an optimum lubrication method that reduces heat generation during high speed operation and increases grease retention.

■Measures to Reduce Heat Generation

Caged Ball LM Guide

Use of a ball cage eliminates friction between balls to reduce heat generation. In addition, grease retention is increased, thus to achieve long service life and high speed operation.

THK AFA Grease, AFJ Grease

It reduces heat generation in high speed operation and has superb lubricity.

■Measure to Improve Lubrication

QZ Lubricator

Continuous oil lubrication ensures that the lubrication and maintenance interval can significantly be extended. It also applies the right amount of oil to the raceway, making itself a eco-friendly lubrication system that does not contaminate the surrounding area.

Caged Ball LM Guide

Supported models: SHS SSR SVR/SVS SHW SRS SCR EPF

Caged Roller LM Guide

Supported models: SRG SRN SRW

QZ Lubricator

Grease

SHS 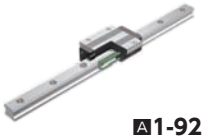 A1-92	SSR 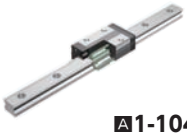 A1-104	SVR/SVS A1-116	SHW A1-136
SRS A1-146	SCR A1-162	EPF A1-170	

SRG A1-396	SRN A1-416	SRW A1-426

QZ Lubricator
for the LM Guide

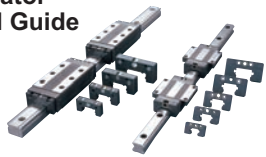

A1-487

THK AFA Grease A24-7	THK AFJ Grease A24-20

High Temperature

In a high temperature environment, dimensional alterations caused by heat is problematic. Use a High Temperature LM Guide, which is heat resistant and has minimal dimensional alterations after being heated. Also, use a high temperature grease.

■Heat Resistance

High Temperature LM Guide

A special heat treatment to maintain dimensional stability minimizes dimensional variations due to heating and cooling.

■Grease

High Temperature Grease

Use a high temperature grease with which the rolling resistance of the LM system is consistent even at high temperature.

Low Temperature

In a low temperature environment, use an LM system with a minimal amount of resin components and a grease that minimize fluctuations in rolling resistance, even at low temperature.

■Impact of Low Temperature on Resin Components

Stainless Steel LM Guide

The endplate (ball circulation path normally made of resin) of the LM block is made of stainless steel.

■Corrosion Prevention

Provide surface treatment to the LM system to increase its corrosion resistance.

■Grease

Use THK AFC Grease, with which the rolling resistance of the system little is consistent even at low temperature.

Micro Motion

Micro strokes cause the oil film to break, resulting in poor lubrication and early wear. In such cases, select a grease with which the oil film strength is high and an oil film can easily be formed.

■Grease

THK AFC Grease

AFC Grease is a urea-based grease that excels in oil film strength and wear resistance.

High Temperature LM Guide

Supported models: HSR-M1 SR-M1 RSR-M1 HSR-M1VV

High Temperature Grease

Stainless Steel LM Guide

Supported models: SSR SHW SRS HSR SR HRW HR RSR

Surface Treatment

Low Temperature Grease

Grease

HSR-M1

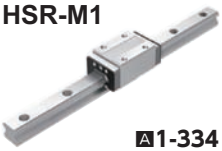

A1-334

SR-M1

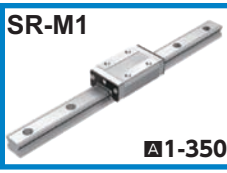

A1-350

RSR-M1

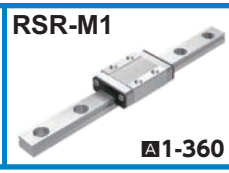

A1-360

HSR-M1VV

A1-376

SSR

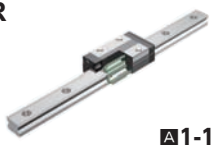

A1-104

SHW

A1-136

SRS

A1-146

HSR

A1-178

SR

A1-204

HRW

A1-236

HR

A1-256

RSR

A1-246

THK AP-CF Treatment

B0-20

THK AFC Grease

A24-10

THK AFC Grease

A24-10

Foreign Matter

If foreign matter enters the LM system, it will cause abnormal wear and shorten the service life. Therefore, it is necessary to prevent such entrance of foreign matter.
Especially in an environment containing small foreign matter or a water-soluble coolant that a telescopic cover or a bellows cannot remove, it is necessary to attach a contamination protection accessory capable of efficiently removing foreign matter.

■Metal Scraper

It is used to remove relatively large foreign objects such as cutting chips, spatter and sand or hard foreign matter that adhere to the LM rail.

■Laminated Contact Scraper LaCS

Unlike a metal scraper, it removes foreign matter while it is in contact with the LM rail. Therefore, it demonstrates a high contamination protection effect against small foreign matter, which has been difficult to remove with conventional metal scrapers.

■QZ Lubricator

QZ Lubricator is a lubrication system that feeds the right amount of lubricant by closely contacting its highly oil-impregnated fiber net to the ball raceway.

■Metal Cap Dedicated for LM Rail Mounting Holes GC Cap

GC cap is a metallic cap that plugs the LM rail mounting hole (article compliant with the RoHS Directives). It prevents the entrance of foreign material and coolant from the LM rail top face (mounting hole) under harsh environments, and significantly increases the dust control performance of the LM Guide if used with a dust control seal.

■Protector

The protector minimizes the entrance of foreign material even in harsh environments where foreign material such as fine particles and liquids are present.

LM Guide
+Metal scraper
+Contact scraper LaCS
+Cap GC, etc.

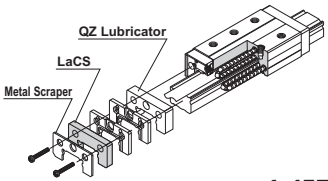

A1-457

Supported models
Caged Ball LM Guide
SHS SSR SVR/SVS SHW SRS
Full Ball LM Guide
HSR NR/NRS-X

Caged Roller LM Guide
+Metal scraper
+Contact scraper LaCS
+Cap GC, etc.

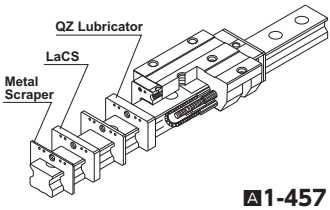

A1-457

Supported models
SRG

Caged Ball LM Guide

SHS

A1-92

SSR

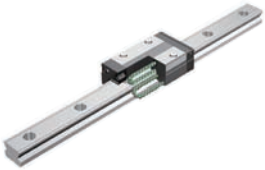

A1-104

SHW

A1-136

SRS

A1-146

SVR/SVS

Featuring the protector A1-116

Full ball LM Guide

HSR

A1-178

NR/NRS-X

A1-216

Caged Roller LM Guide

SRG

Featuring the protector A1-396

Selecting a Type

Types of LM Guides

THK offers a wide array of types and dimensions with LM Guides as standard so that you can select the optimal product for any application. With the unit structure of each model, you can easily obtain high running accuracy with no clearance simply by mounting the product on a plane surface with bolts. We have a proven track record and know-how in extensive applications with LM Guides.

Classification		Type		Specification Table	Load capacity diagram	Basic load rating (kN)	
						Basic dynamic load rating	Basic static load rating
Radial type	Caged Ball LM Guide		SSR-XW	▶A1-108	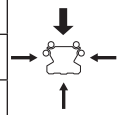	14.7 to 64.6	16.5 to 71.6
			SSR-XV	▶A1-110		9.1 to 21.7	9.7 to 22.5
			SSR-XTB	▶A1-112		14.7 to 31.5	16.5 to 36.4
	Full-Complement Ball LM Guides		SR-W	▶A1-210		13.8 to 411	20.5 to 537
			SR-M1W	▶A1-354		13.8 to 60.4	20.5 to 81.8
			SR-V	▶A1-210		9.1 to 40.9	11.7 to 46.7
			SR-M1V	▶A1-354		9.1 to 40.9	11.7 to 46.7
			SR-TB	▶A1-212		13.8 to 136	20.5 to 179
			SR-M1TB	▶A1-356		13.8 to 60.4	20.5 to 81.8
			SR-SB	▶A1-212		9.1 to 40.9	11.7 to 46.7
			SR- M1SB	▶A1-356		9.1 to 40.9	11.7 to 46.7
	Oil-Free LM Guides for Special Environ-ments		SR-MSV	▶A1-388		—	—
			SR-MSW	▶A1-388		—	—
	Caged Ball LM Guides for Machine Tools high-rigidity model for ultra-heavy loads		SVR-C	▶A1-126	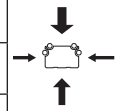	48 to 260	68 to 328
			SVR-LC	▶A1-126		57 to 340	86 to 481
			SVR-R	▶A1-122		48 to 260	68 to 328
			SVR-LR	▶A1-122		57 to 340	86 to 481
			SVR-CH	▶A1-132		90 to 177	115 to 238
			SVR-LCH	▶A1-132		108 to 214	159 to 312
			SVR-RH	▶A1-130		90 to 177	115 to 238
			SVR-LRH	▶A1-130		108 to 214	159 to 312

	External dimensions (mm)		Features	Major application
	Height	Width		
	24 to 48	34 to 70	• Long service life, long-term maintenance-free operation • Low dust generation, low noise, acceptable running sound • Superbly high speed • Smooth motion in all mounting orientations • Thin, compact design, large radial load capacity • Superb in planar running accuracy • Superb capability of absorbing mounting error • Stainless steel type also available as standard	• Surface grinder table • Tool grinder table • Electric discharge machine • Printed circuit board drilling machine • Chip mounter • High-speed transfer equipment • Traveling unit of robots • Machining center • NC lathe • Five axis milling machine • Conveyance system • Mold guide of pressing machines • Inspection equipment • Testing machine • Food-related machine • Medical equipment • 3D measuring instrument • Packaging machine • Injection molding machine • Woodworking machine • Ultra precision table • Semiconductor/liquid crystal manufacturing equipment
	24 to 33	34 to 48		
	24 to 33	52 to 73		
	24 to 135	34 to 250	• Thin, compact design, large radial load capacity • Superb in planar running accuracy • Superb capability of absorbing mounting error • Stainless steel type also available as standard • Type M1, achieving max service temperature of 150℃, also available	
	24 to 48	34 to 70		
	24 to 48	34 to 70		
	24 to 48	34 to 70		
	24 to 68	52 to 140		
	24 to 48	52 to 100		
	24 to 48	52 to 100		
	24 to 48	52 to 100		
	24 to 28	34 to 42	• Minimum generation of outgases (water, organic matter) • Small amount of particles generated • Can be used at high temperature (up to 150℃)	• Photolithography machine • Organic EL display manufacturing machine • Ion implantation equipment
	24 to 28	34 to 42		
	31 to 75	72 to 170	• Long service life, long-term maintenance-free operation • Low dust generation, low noise, acceptable running sound • Superbly high speed • Smooth motion in all mounting orientations • Ultra-heavy load capacity optimal for machine tools • Thin, compact design, large radial load capacity • High vibration resistance and impact resistance due to improved damping characteristics • Superb in planar running accuracy	• Machining center • NC lathe • Grinding machine • Five axis milling machine • Jig borer • Drilling machine • NC milling machine • Horizontal milling machine • Mold processing machine • Graphite working machine • Electric discharge machine • Wire-cut electric discharge machine
	31 to 75	72 to 170		
	31 to 75	50 to 126		
	31 to 75	50 to 126		
	48 to 70	100 to 140	• Long service life, long-term maintenance-free operation • Low dust generation, low noise, acceptable running sound • Superbly high speed • Smooth motion in all mounting orientations • Ultra-heavy load capacity optimal for machine tools • Large radial load capacity • High vibration resistance and impact resistance due to improved damping characteristics • Superb in planar running accuracy • Has dimensions almost the same as that of the full-ball type LM Guide model HSR, which is practically a global standard size	
	48 to 70	100 to 140		
	55 to 80	70 to 100		
	55 to 80	70 to 100		

Classification		Type		Specification Table	Load capacity diagram	Basic load rating (kN)	
						Basic dynamic load rating	Basic static load rating
Radial type	Full-Complement Ball LM Guides for Machine Tools high-rigidity model for ultra-heavy loads		NR-RX	▶A1-222		37.1 to 208.7	68.1 to 351.7
			NR-LRX	▶A1-222		45.4 to 268.9	90.8 to 505.5
			NR-CX	▶A1-226		37.1 to 208.7	68.1 to 351.7
			NR-LCX	▶A1-226		45.4 to 268.9	90.8 to 505.5
			NR-R	▶A1-222		271 to 479	610 to 1040
			NR-LR	▶A1-222		355 to 599	800 to 1300
			NR-A	▶A1-230		271 to 479	610 to 1040
			NR-LA	▶A1-230		355 to 599	800 to 1300
			NR-B	▶A1-232		271 to 479	610 to 1040
			NR-LB	▶A1-232		355 to 599	800 to 1300
4-way type	LM Guides for Machine Tools high-rigidity model for ultra-heavy loads		SVS-R	▶A1-124		37 to 199	52 to 251
			SVS-LR	▶A1-124		44 to 261	66 to 368
			SVS-C	▶A1-128		37 to 199	52 to 251
			SVS-LC	▶A1-128		44 to 261	66 to 368
			SVS-RH	▶A1-130		69 to 136	88 to 182
			SVS-LRH	▶A1-130		83 to 164	122 to 239
			SVS-CH	▶A1-132		69 to 136	88 to 182
			SVS-LCH	▶A1-132		83 to 164	122 to 239
	Full-Complement Ball LM Guides for Machine Tools high-rigidity model for ultra-heavy loads		NRS-CX	▶A1-228		28.4 to 159.8	52.2 to 269.4
			NRS-LCX	▶A1-228		34.7 to 206	69.6 to 387.2
			NRS-RX	▶A1-224		28.4 to 159.8	52.2 to 269.4
			NRS-LRX	▶A1-224		34.7 to 206	69.6 to 387.2
4-way equal load type	Full-Complement Ball LM Guides for Machine Tools high-rigidity model for ultra-heavy loads		NRS-A	▶A1-230		212 to 376	431 to 737
			NRS-LA	▶A1-230		278 to 470	566 to 920
			NRS-B	▶A1-232		212 to 376	431 to 737
			NRS-LB	▶A1-232		278 to 470	566 to 920
			NRS-R	▶A1-224		212 to 376	431 to 737
			NRS-LR	▶A1-224		278 to 470	566 to 920

External dimensions (mm)		Features	Major application
Height	Width		
31 to 75	50 to 126	• Low dust generation, low noise, acceptable running sound • Superbly high speed • Smooth motion in all mounting orientations • Ultra-heavy load capacity optimal for machine tools • Thin, compact design, large radial load capacity • High vibration resistance and impact resistance due to improved damping characteristics • Superb in planar running accuracy	• Machining center • NC lathe • Grinding machine • Five axis milling machine • Jig borer • Drilling machine • NC milling machine • Horizontal milling machine • Mold processing machine • Graphite working machine • Electric discharge machine • Wire-cut electric discharge machine
31 to 75	50 to 126		
31 to 75	72 to 170		
31 to 75	72 to 170		
83 to 105	145 to 200	• Ultra-heavy load capacity optimal for machine tools • High vibration resistance and impact resistance due to improved damping characteristics • Thin, compact design, large radial load capacity • Superb in planar running accuracy	
83 to 105	145 to 200		
83 to 105	195 to 260		
83 to 105	195 to 260		
83 to 105	195 to 260		
83 to 105	195 to 260		
31 to 75	50 to 126	• Long service life, long-term maintenance-free operation • Low dust generation, low noise, acceptable running sound • Superbly high speed • Smooth motion in all mounting orientations • Ultra-heavy load capacity optimal for machine tools • Low profile, compact 4-way type • High vibration resistance and impact resistance due to improved damping characteristics	
31 to 75	50 to 126		
31 to 75	72 to 170		
31 to 75	72 to 170		
55 to 80	70 to 100	• Long service life, long-term maintenance-free operation • Low dust generation, low noise, acceptable running sound • Superbly high speed • Smooth motion in all mounting orientations • Ultra-heavy load capacity optimal for machine tools • 4-way type • High vibration resistance and impact resistance due to improved damping characteristics • Has dimensions almost the same as that of the full-ball type LM Guide model HSR, which is practically a global standard size	
55 to 80	70 to 100		
48 to 70	100 to 140		
48 to 70	100 to 140		
31 to 75	72 to 170	• Low dust generation, low noise, acceptable running sound • Superbly high speed • Smooth motion in all mounting orientations • Ultra-heavy load capacity optimal for machine tools • Low profile, compact 4-way type • High vibration resistance and impact resistance due to improved damping characteristics	
31 to 75	72 to 170		
31 to 75	50 to 126		
31 to 75	50 to 126		
83 to 105	195 to 260	• Ultra-heavy load capacity optimal for machine tools • High vibration resistance and impact resistance due to improved damping characteristics • Low-Profile compact design, 4-way equal load	
83 to 105	195 to 260		
83 to 105	195 to 260		
83 to 105	195 to 260		
83 to 105	145 to 200		
83 to 105	145 to 200		

Classification		Type		Specification Table	Load capacity diagram	Basic load rating (kN)	
						Basic dynamic load rating	Basic static load rating
4-way equal load type	Caged Roller LM Guide - super ultra-heavy-load, high rigidity types		SRG-A, C	▶A1-402	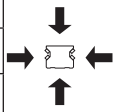	11.3 to 131	25.8 to 266
			SRG-LA, LC	▶A1-402		26.7 to 278	63.8 to 599
			SRG-R, V	▶A1-408		11.3 to 131	25.8 to 266
			SRG-LR, LV	▶A1-408		26.7 to 601	63.8 to 1170
			SRN-C	▶A1-420		59.1 to 131	119 to 266
			SRN-LC	▶A1-420		76 to 278	165 to 599
			SRN-R	▶A1-422		59.1 to 131	119 to 266
			SRN-LR	▶A1-422		76 to 278	165 to 599
			SRW-LR	▶A1-430		115 to 601	256 to 1170
	Caged Ball LM Guide - heavy-load, high rigidity types		SHS-C	▶A1-96	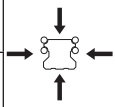	14.2 to 205	24.2 to 320
			SHS-LC	▶A1-96		17.2 to 253	31.9 to 408
			SHS-V	▶A1-98		14.2 to 205	24.2 to 320
			SHS-LV	▶A1-98		17.2 to 253	31.9 to 408
			SHS-R	▶A1-100		14.2 to 128	24.2 to 197
			SHS-LR	▶A1-100		36.8 to 161	64.7 to 259

External dimensions (mm)		Features	Major application
Height	Width		
24 to 70	47 to 140	• Long service life, long-term maintenance-free operation • Low noise, acceptable running sound • Superbly high speed • Smooth motion due to prevention of rollers from skewing • Ultra-heavy load capacity optimal for machine tools	• Machining center • NC lathe • Grinding machine • Five axis milling machine • Jig borer • Drilling machine • NC milling machine • Horizontal milling machine • Mold processing machine • Graphite working machine • Electric discharge machine • Wire-cut electric discharge machine
30 to 120	63 to 250		
24 to 80	34 to 100		
30 to 90	44 to 126		
44 to 63	100 to 140	• Long service life, long-term maintenance-free operation • Low noise, acceptable running sound • Superbly high speed • Smooth motion due to prevention of rollers from skewing • Ultra-heavy load capacity optimal for machine tools • Low center of gravity, ultra-high rigidity	
44 to 75	100 to 170		
44 to 63	70 to 100		
44 to 75	70 to 126		
70 to 150	135 to 300		
24 to 90	47 to 170	• Long service life, long-term maintenance-free operation • Low dust generation, low noise, acceptable running sound • Superbly high speed • Smooth motion in all mounting orientations • Heavy load, high rigidity • Has dimensions almost the same as that of the full-ball type LM Guide model HSR, which is practically a global standard size • Superb capability of absorbing mounting error	• Machining center • NC lathe • XYZ axes of heavy cutting machine tools • Grinding head feeding axis of grinding machines • Components requiring a heavy moment and high accuracy • NC milling machine • Horizontal milling machine • Gantry five axis milling machine • Z axis of electric discharge machines • Wire-cut electric discharge machine • Car elevator • Food-related machine • Testing machine • Vehicle doors • Printed circuit board drilling machine • ATC • Construction equipment • Shield machine • Semiconductor/liquid crystal manufacturing equipment
24 to 90	47 to 170		
24 to 90	34 to 126		
24 to 90	34 to 126		
28 to 80	34 to 100		
28 to 80	34 to 100		

Classification		Type		Specification Table	Load capacity diagram	Basic load rating (kN)	
						Basic dynamic load rating	Basic static load rating
4-way equal load type	Full-Complement Ball LM Guide - heavy-load, high rigidity types		HSR-A	▶A1-184		10.9 to 304	15.7 to 355
			HSR-M1A	▶A1-340		10.9 to 53.9	15.7 to 70.2
			HSR-LA	▶A1-184		23.9 to 367	35.8 to 464
			HSR-M1LA	▶A1-340		23.9 to 65	35.8 to 91.7
			HSR-CA	▶A1-194		19.8 to 304	27.4 to 355
			HSR-HA	▶A1-194		23.9 to 518	35.8 to 728
			HSR-B	▶A1-186		10.9 to 304	15.7 to 355
			HSR-M1B	▶A1-342		10.9 to 53.9	15.7 to 70.2
			HSR-LB	▶A1-186		23.9 to 367	35.8 to 464
			HSR-M1LB	▶A1-342		23.9 to 65	35.8 to 91.7
			HSR-CB	▶A1-196		19.8 to 304	27.4 to 355
			HSR-HB	▶A1-196		23.9 to 518	35.8 to 728
			HSR-R	▶A1-190		1.08 to 304	2.16 to 355
			HSR-M1R	▶A1-344		10.9 to 53.9	15.7 to 70.2
			HSR-LR	▶A1-190		23.9 to 367	35.8 to 464
			HSR-M1LR	▶A1-344		23.9 to 65	35.8 to 91.7
			HSR-HR	▶A1-198		441 to 518	540 to 728
	LM Guide for Medium-to-Low Vacuum		HSR-M1VV	▶A1-380		10.9	15.7
	Full-ball LM Guide - side mount types		HSR-YR	▶A1-192		10.9 to 195	15.7 to 228
			HSR-M1YR	▶A1-346		10.9 to 53.9	15.7 to 70.2
	Full-Complement LM Guides - special LM rail types		JR-A	▶A1-308		27.6 to 121	36.4 to 146
			JR-B	▶A1-308		27.6 to 121	36.4 to 146
			JR-R	▶A1-308		27.6 to 121	36.4 to 146

	External dimensions (mm)		Features	Major application
	Height	Width		
	24 to 110	47 to 215	• Heavy load, high rigidity • Practically a global standard size • Superb capability of absorbing mounting error • Stainless steel type also available as standard • Type M1, achieving max service temperature of 150℃, also available • Type M2, with high corrosion resistance, also available (Basic dynamic load rating: 2.33 to 5.57 kN) (Basic static load rating: 2.03 to 5.16 kN)	• Machining center • NC lathe • XYZ axes of heavy cutting machine tools • Grinding head feeding axis of grinding machines • Components requiring a heavy moment and high accuracy • NC milling machine • Horizontal milling machine • Gantry five axis milling machine • Z axis of electric discharge machines • Wire-cut electric discharge machine • Car elevator • Food-related machine • Testing machine • Vehicle doors • Printed circuit board drilling machine • ATC • Construction equipment • Shield machine • Semiconductor/liquid crystal manufacturing equipment
	24 to 48	47 to 100		
	30 to 110	63 to 215		
	30 to 48	63 to 100		
	30 to 110	63 to 215		
	30 to 145	63 to 350		
	24 to 110	47 to 215		
	24 to 48	47 to 100		
	30 to 110	63 to 215		
	30 to 48	63 to 100		
	30 to 110	63 to 215		
	30 to 145	63 to 350		
	11 to 110	16 to 156		
	28 to 55	34 to 70		
	30 to 110	44 to 156		
	30 to 55	44 to 70		
	120 to 145	250 to 266		
	28	34	• Can be used in various environments at atmospheric pressure to vacuum (10^{-3} [Pa]) • Allows baking temperature of 200℃* at a maximum * If the baking temperature exceeds 100℃, multiply the basic load rating with the temperature coefficient.	• Medical equipment • Semiconductor/liquid crystal manufacturing equipment
	28 to 90	33.5 to 124.5	• Easy mounting and reduced mounting height when using 2 units opposed to each other since the side faces of the LM block have mounting holes • Heavy load, high rigidity • Superb capability of absorbing mounting error • Stainless steel type also available as standard • Type M1, achieving max service temperature of 150℃, also available	• Cross rails of gantry machine tools • Z axis of woodworking machines • Z axis of measuring instruments • Components opposed to each other
	28 to 55	33.5 to 69.5		
	61 to 114	70 to 140	• Since the central part of the LM rail is thinly structured, the LM Guide is capable of absorbing an error and achieving smooth motion if the parallelism between the two axes is poor • Since the LM rail has a highly rigid sectional shape, it can be used as a structural member	• Automated warehouse • Garage • Gantry robot • FMS traveling rail • Lift • Conveyance system • Welding machine • Lifter • Crane • Forklift • Coating machine • Shield machine • Stage setting
	61 to 114	70 to 140		
	65 to 124	48 to 100		

Classification		Type		Specification Table	Load capacity diagram	Basic load rating (kN)	
						Basic dynamic load rating	Basic static load rating
4-way equal load type	Caged Ball Cross LM Guide		SCR	▶A1-166	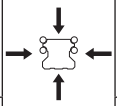	36.8 to 253	64.7 to 408
	Full-Complement LM Guide orthogonal type		CSR	▶A1-294		10.9 to 100	15.7 to 135
	Caged Ball LM Guide - wide, low center of gravity types		SHW-CA	▶A1-140	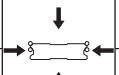	4.31 to 70.2	5.66 to 91.4
			SHW-CR, HR	▶A1-142		4.31 to 70.2	5.66 to 91.4
	Full-Complement Ball LM Guide - wide, low center of gravity types		HRW-CA	▶A1-240		5.53 to 80.3	9.1 to 109
			HRW-CR, LRM	▶A1-242		3.29 to 62.4	7.16 to 86.3
	Full-ball Straight - Curved Guide		HMG	▶A1-324	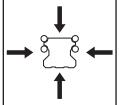	2.56 to 66.2	Straight section 4.23 to 66.7 Curved section 0.44 to 36.2
	Caged Ball LM Guides Finite stroke		EPF	▶A1-174	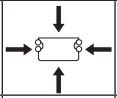	0.90 to 3.71	1.60 to 5.88
	Full-Complement Ball LM Guide - separate types		HR, HR-T	▶A1-262	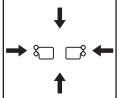	2.82 to 226	3.48 to 232
Interchangeable designs			GSR-T	▶A1-274	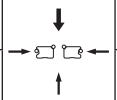	8.42 to 37	9.77 to 39.1
			GSR-V	▶A1-274		6.51 to 15.5	6.77 to 15.2
	Full-Complement Ball LM Guides - LM rail-rack intergrated type		GSR-R	▶A1-282	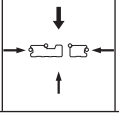	15.5 to 37	15.2 to 39.1

External dimensions (mm)		Features	Major application
Height	Width		
70 to 180	88 to 226	• A compact XY structure is allowed due to an XY orthogonal, single-piece LM block • Since a saddle-less structure is allowed, the machine can be lightweighted and compactly designed • Long service life, long-term maintenance-free operation • Low dust generation, low noise, acceptable running sound • Superbly high speed	• Low center of gravity, precision XY table • NC lathe • Optical measuring instrument • Automatic lathe • Inspection equipment • Cartesian coordinate robot • Bonding machine • Wire-cut electric discharge machine • Hollow table • Printed circuit board assembler • Machine tool table • Electric discharge machine • XY axes of horizontal machining center
47 to 118	38.8 to 129.8	• A compact XY structure is allowed due to an XY orthogonal, single-piece LM block • Since a saddle-less structure is allowed, the machine can be lightweighted and compactly designed	
12 to 50	40 to 162	• Long service life, long-term maintenance-free operation • Low dust generation, low noise, acceptable running sound • Superbly high speed • Smooth motion in all mounting orientations • Wide, low center of gravity, space saving structure • Stainless steel type also available as standard	• Z axis of IC printed circuit board drilling machine • Z axis of small electric discharge machine • Loader • Machining center • NC lathe • Robot • Wire-cut electric discharge machine • APC • Semiconductor/liquid crystal manufacturing equipment • Measuring instrument • Wafer transfer equipment • Construction equipment • Railroad vehicle
12 to 50	30 to 130		
17 to 60	60 to 200	• 4-way equal load, thin and highly rigid • Wide, low center of gravity, space saving structure • Stainless steel type also available as standard	
12 to 50	30 to 130		
24 to 90	47 to 170	• Freedom of design • Cost reduction through simplified structure	• Large swivel base • Pendulum vehicle for railroad • Pantagraph • Control unit • Optical measuring machine • Tool grinder • X-Ray machine • CT scanner • Medical equipment • Stage setting • Car elevator • Amusement machine • Turntable • Tool changer
8 to 16	17 to 32	• Caged ball effect using a cage • Smooth movement with minimal rolling variation • 4-groove construction in a compact body	• Semiconductor manufacturing equipment • Medical equipment • Inspection equipment • Industrial machinery
8.5 to 60	18 to 125	• Low-Profile high rigidity, space saving structure • Interchangeable with Cross-Roller Guide • Preload can be adjusted • Stainless steel type also available as standard	• XYZ axes of electric discharge machine • Precision table • XZ axes of NC lathe • Assembly robot • Conveyance system • Machining center • Wire-cut electric discharge machine • Tool changer • Woodworking machine
20 to 38	32 to 68	• LM block and LM rail are both interchangeable • Preload can be adjusted • Capable of absorbing vertical level error and horizontal tolerance for parallelism	• Industrial robot • Various conveyance systems • Automated warehouse • Palette changer • ATC • Door closing device • Guide using an aluminum mold base • Welding machine • Coating machine • Car washing machine
20 to 30	32 to 50		
30 to 38	59.91 to 80.18	• LM rail-rack integrated design eliminates assembly and adjustment work • LM rail-rack integrated design enables a space-saving structure to be achieved • Capable of supporting long strokes	

Classification		Type		Specification Table	Load capacity diagram	Basic load rating (kN)	
						Basic dynamic load rating	Basic static load rating
Miniature types	Caged Ball LM Guides		SRS-S	▶A1-152	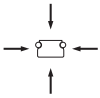	1.09 to 4.5	0.964 to 3.39
			SRS-M			0.439 to 16.5	0.468 to 20.2
			SRS-N			0.515 to 9.71	0.586 to 8.55
		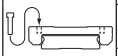	SRS-WS	▶A1-156		1.38 to 6.64	1.35 to 5.94
			SRS-WM			0.584 to 9.12	0.703 to 8.55
			SRS-WN			0.746 to 12.4	0.996 to 12.1
	Full-Complement Ball LM Guides		RSR-M	▶A1-252	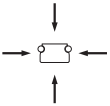	0.18 to 8.82	0.27 to 12.7
			RSR-M1V	▶A1-364		1.47 to 8.82	2.25 to 12.7
			RSR-N	▶A1-252		0.3 to 14.2	0.44 to 20.6
			RSR-M1N	▶A1-364		2.6 to 14.2	3.96 to 20.6
	Full-Complement Ball LM Guide - wide types	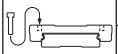	RSR-WM/WV	▶A1-252		0.25 to 6.66	0.47 to 9.8
			RSR-M1WV	▶A1-366		2.45 to 6.66	3.92 to 9.8
			RSR-WN	▶A1-252		0.39 to 9.91	0.75 to 14.9
			RSR-M1WN	▶A1-366		3.52 to 9.91	5.37 to 14.9
	Full Complement Ball LM Guide - orthogonal type		MX	▶A1-300		0.59 to 2.04	1.1 to 3.21
Circular arc types	Full-Complement Ball LM Guides		HCR	▶A1-316	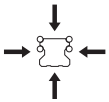	4.7 to 141	8.53 to 215
Self-aligning types	Full-Complement Ball LM Guides		NSR-TBC	▶A1-330	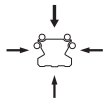	9.41 to 90.8	18.6 to 152

External dimensions (mm)		Features	Major application
Height	Width		
8 to 16	17 to 32	• Long service life, long-term maintenance-free operation • Low dust generation, low noise, acceptable running sound • Superbly high speed • Smooth motion in all mounting orientations • Stainless steel type also available as standard • Lightweight and compact	• IC/LSI manufacturing machine • Hard disc drive • Slide unit of OA equipment • Wafer transfer equipment • Printed circuit board assembly table • Medical equipment • Electronic components of electron microscope • Optical stage • Stepper • Plotting machine • Feed mechanism of IC bonding machine • Inspection equipment
6 to 25	17 to 48		
6 to 16	12 to 32		
9 to 16	25 to 60		
6.5 to 16	17 to 60		
4 to 25	8 to 46	• Stainless steel type also available as standard • Long type with increased load capacity also offered as standard • Type M1, achieving max service temperature of 150°C, also available	• IC/LSI manufacturing machine • Hard disc drive • Slide unit of OA equipment • Wafer transfer equipment • Printed circuit board assembly table • Medical equipment • Electronic components of electron microscope • Optical stage • Stepper • Plotting machine • Feed mechanism of IC bonding machine • Inspection equipment
10 to 25	20 to 46		
4 to 25	8 to 46		
10 to 25	20 to 46		
4.5 to 16	12 to 60	• Stainless steel type also available as standard • Long type with increased load capacity also offered as standard • Type M1, achieving max service temperature of 150°C, also available	
12 to 16	30 to 60		
4.5 to 16	12 to 60		
12 to 16	30 to 60		
10 to 14.5	15.2 to 30.2	• A compact XY structure is allowed due to an XY orthogonal, single-piece LM block • Stainless steel type also available as standard	• IC/LSI manufacturing machine • Inspection equipment • Slide unit of OA equipment • Wafer transfer equipment • Feed mechanism of IC bonding machine • Printed circuit board assembly table • Medical equipment • Electronic components of electron microscope • Optical stage
18 to 90	39 to 170	• Circular motion guide in a 4-way equal load design • Highly accurate circular motion without play • Allows an efficient design with the LM block placed in the loading point • Large circular motion easily achieved	• Large swivel base • Pendulum vehicle for railroad • Pantagraph • Control unit • Optical measuring machine • Tool grinder • X-Ray machine • CT scanner • Medical equipment • Stage setting • Car elevator • Amusement machine • Turntable • Tool changer
40 to 105	70 to 175	• Can be used in rough mount due to self-aligning on the fit surface of the case • Preload can be adjusted • Can be mounted on a black steel sheet	• XY axes of ordinary industrial machinery • Various conveyance systems • Automated warehouse • Palette changer • Automatic coating machine • Various welding machines

Calculating the Applied Load

The LM Guide is capable of receiving loads and moments in all directions that are generated due to the mounting orientation, alignment, gravity center position of a traveling object, thrust position and cutting resistance.

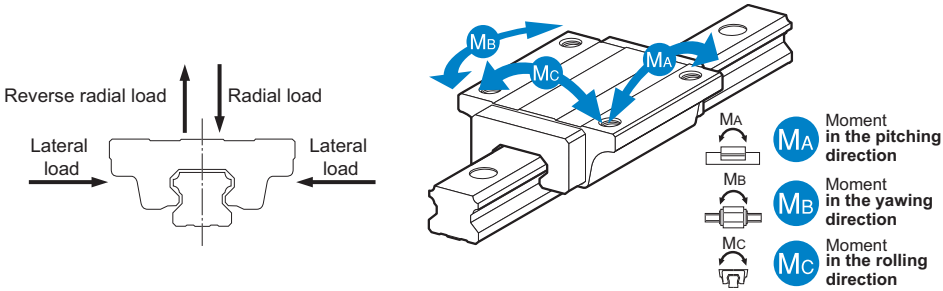

Fig.1 Directions of the Loads Applied on the LM Guide

Calculating an Applied Load

[Single-Axis Use]

● **Moment Equivalence**

When the installation space for the LM Guide is limited, you may have to use only one LM block, or double LM blocks closely contacting with each other. In such a setting, the load distribution is not uniform and, as a result, an excessive load is applied in localized areas (i.e., both ends) as shown in Fig.2. Continued use under such conditions may result in flaking in those areas, consequently shortening the service life. In such a case, calculate the actual load by multiplying the moment value by any one of the equivalent-moment factors specified in Table1 to Table6.

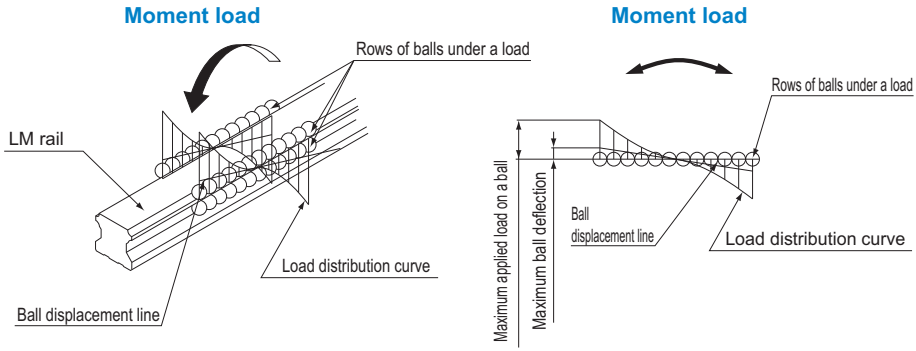

Fig.2 Ball Load when a Moment is Applied

An equivalent-load equation applicable when a moment acts on an LM Guide is shown below.

$$P = K \cdot M$$

P : Equivalent load per LM Guide (N)
K : Equivalent moment factor
M : Applied moment (N-mm)

● Equivalent Factor

Since the rated load is equivalent to the permissible moment, the equivalent factor to be multiplied when equalizing the M_A, M_B and M_C moments to the applied load per block is obtained by dividing the rated loads in the corresponding directions.

With those models other than 4-way equal load types, however, the load ratings in the 4 directions differ from each other. Therefore, the equivalent factor values for the M_A and M_C moments also differ depending on whether the direction is radial or reverse radial.

■Equivalent Factors for the M_A Moment

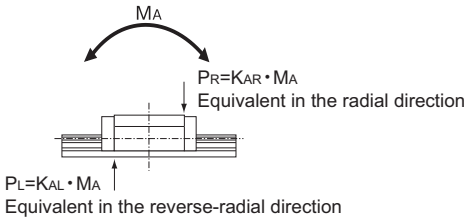

Fig.3 Equivalent Factors for the M_A Moment

Equivalent factors for the M_A Moment

- Equivalent factor in the radial direction $K_{AR}=\dfrac{C_0}{M_A}$
- Equivalent factor in the reverse radial direction $K_{AL}=\dfrac{C_{0L}}{M_A}$

$$\frac{C_0}{K_{AR}\cdot M_A}=\frac{C_{0L}}{K_{AL}\cdot M_A}=1$$

■Equivalent Factors for the M_B Moment

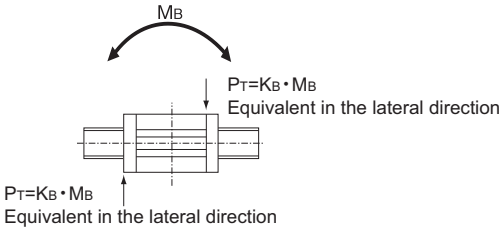

Fig.4 Equivalent Factors for the M_B Moment

Equivalent factors for the M_B Moment

- Equivalent factor in the lateral directions $K_B=\dfrac{C_{0T}}{M_B}$

$$\frac{C_{0T}}{K_B\cdot M_B}=1$$

■Equivalent Factors for the M_C Moment

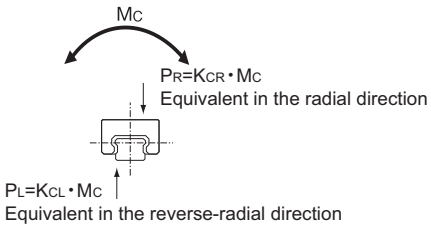

Fig.5 Equivalent Factors for the M_C Moment

Equivalent factors for the M_C Moment

- Equivalent factor in the radial direction $K_{CR}=\frac{C_0}{M_C}$
- Equivalent factor in the reverse radial direction $K_{CL}=\frac{C_{0L}}{M_C}$

$$\frac{C_0}{K_{CR}\cdot M_C}=\frac{C_{0L}}{K_{CL}\cdot M_C}=1$$

C_0	:	Basic static load rating (radial direction)	(N)
C_{0L}	:	Basic static load rating (reverse radial direction)	(N)
C_{0T}	:	Basic static load rating (lateral direction)	(N)
P_R	:	Calculated load (radial direction)	(N)
P_L	:	Calculated load (reverse radial direction)	(N)
P_T	:	Calculated load (lateral direction)	(N)

Table1 Equivalent Factors (Models SHS, SSR, SVR, SVS, SHW and SRS)

Model No.		Equivalent factor							
		K_{AR1}	K_{AL1}	K_{AR2}	K_{AL2}	K_{B1}	K_{B2}	K_{CR}	K_{CL}
SHS	15	1.38×10^{-1}		2.69×10^{-2}		1.38×10^{-1}	2.69×10^{-2}	1.50×10^{-1}	
	15L	1.07×10^{-1}		2.22×10^{-2}		1.07×10^{-1}	2.22×10^{-2}	1.50×10^{-1}	
	20	1.15×10^{-1}		2.18×10^{-2}		1.15×10^{-1}	2.18×10^{-2}	1.06×10^{-1}	
	20L	8.85×10^{-2}		1.79×10^{-2}		8.85×10^{-2}	1.79×10^{-2}	1.06×10^{-1}	
	25	9.25×10^{-2}		1.90×10^{-2}		9.25×10^{-2}	1.90×10^{-2}	9.29×10^{-2}	
	25L	7.62×10^{-2}		1.62×10^{-2}		7.62×10^{-2}	1.62×10^{-2}	9.29×10^{-2}	
	30	8.47×10^{-2}		1.63×10^{-2}		8.47×10^{-2}	1.63×10^{-2}	7.69×10^{-2}	
	30L	6.52×10^{-2}		1.34×10^{-2}		6.52×10^{-2}	1.34×10^{-2}	7.69×10^{-2}	
	35	6.95×10^{-2}		1.43×10^{-2}		6.95×10^{-2}	1.43×10^{-2}	6.29×10^{-2}	
	35L	5.43×10^{-2}		1.16×10^{-2}		5.43×10^{-2}	1.16×10^{-2}	6.29×10^{-2}	
	45	6.13×10^{-2}		1.24×10^{-2}		6.13×10^{-2}	1.24×10^{-2}	4.69×10^{-2}	
	45L	4.79×10^{-2}		1.02×10^{-2}		4.79×10^{-2}	1.02×10^{-2}	4.69×10^{-2}	
	55	4.97×10^{-2}		1.02×10^{-2}		4.97×10^{-2}	1.02×10^{-2}	4.02×10^{-2}	
	55L	3.88×10^{-2}		8.30×10^{-3}		3.88×10^{-2}	8.30×10^{-3}	4.02×10^{-2}	
	65	3.87×10^{-2}		7.91×10^{-3}		3.87×10^{-2}	7.91×10^{-3}	3.40×10^{-2}	
	65L	3.06×10^{-2}		6.51×10^{-3}		3.06×10^{-2}	6.51×10^{-3}	3.40×10^{-2}	
SSR	15XW (TB)	2.08×10^{-1}	1.04×10^{-1}	3.75×10^{-2}	1.87×10^{-2}	1.46×10^{-1}	2.59×10^{-2}	1.71×10^{-1}	8.57×10^{-2}
	15XV	3.19×10^{-1}	1.60×10^{-1}	5.03×10^{-2}	2.51×10^{-2}	2.20×10^{-1}	3.41×10^{-2}	1.71×10^{-1}	8.57×10^{-2}
	20XW (TB)	1.69×10^{-1}	8.46×10^{-2}	3.23×10^{-2}	1.62×10^{-2}	1.19×10^{-1}	2.25×10^{-2}	1.29×10^{-1}	6.44×10^{-2}
	20XV	2.75×10^{-1}	1.37×10^{-1}	4.28×10^{-2}	2.14×10^{-2}	1.89×10^{-1}	2.89×10^{-2}	1.29×10^{-1}	6.44×10^{-2}
	25XW (TB)	1.41×10^{-1}	7.05×10^{-2}	2.56×10^{-2}	1.28×10^{-2}	9.86×10^{-2}	1.77×10^{-2}	1.10×10^{-1}	5.51×10^{-2}
	25XV	2.15×10^{-1}	1.08×10^{-1}	3.40×10^{-2}	1.70×10^{-2}	1.48×10^{-1}	2.31×10^{-2}	1.10×10^{-1}	5.51×10^{-2}
	30XW	1.18×10^{-1}	5.91×10^{-2}	2.19×10^{-2}	1.10×10^{-2}	8.26×10^{-2}	1.52×10^{-2}	9.22×10^{-2}	4.61×10^{-2}
	35XW	1.01×10^{-1}	5.03×10^{-2}	1.92×10^{-2}	9.60×10^{-3}	7.04×10^{-2}	1.33×10^{-2}	7.64×10^{-2}	3.82×10^{-2}
SVR	25	1.13×10^{-1}	7.28×10^{-2}	2.25×10^{-2}	1.45×10^{-2}	7.14×10^{-2}	1.43×10^{-2}	9.59×10^{-2}	6.17×10^{-2}
	25L	9.14×10^{-2}	5.88×10^{-2}	1.85×10^{-2}	1.19×10^{-2}	5.80×10^{-2}	1.17×10^{-2}	9.59×10^{-2}	6.17×10^{-2}
	30	1.01×10^{-1}	6.50×10^{-2}	1.89×10^{-2}	1.21×10^{-2}	6.36×10^{-2}	1.19×10^{-2}	8.45×10^{-2}	5.43×10^{-2}
	30L	7.56×10^{-2}	4.86×10^{-2}	1.57×10^{-2}	1.01×10^{-2}	4.79×10^{-2}	1.00×10^{-2}	8.45×10^{-2}	5.43×10^{-2}
	35	9.19×10^{-2}	5.91×10^{-2}	1.68×10^{-2}	1.08×10^{-2}	5.77×10^{-2}	1.06×10^{-2}	7.08×10^{-2}	4.55×10^{-2}
	35L	6.80×10^{-2}	4.37×10^{-2}	1.39×10^{-2}	8.97×10^{-3}	4.31×10^{-2}	8.86×10^{-3}	7.08×10^{-2}	4.55×10^{-2}
	45	6.73×10^{-2}	4.33×10^{-2}	1.35×10^{-2}	8.71×10^{-3}	4.25×10^{-2}	8.59×10^{-3}	5.32×10^{-2}	3.42×10^{-2}
	45L	5.40×10^{-2}	3.47×10^{-2}	1.10×10^{-2}	7.09×10^{-3}	3.41×10^{-2}	6.97×10^{-3}	5.30×10^{-2}	3.41×10^{-2}
	55	5.89×10^{-2}	3.79×10^{-2}	1.14×10^{-2}	7.35×10^{-3}	3.72×10^{-2}	7.24×10^{-3}	4.63×10^{-2}	2.98×10^{-2}
	55L	4.55×10^{-2}	2.92×10^{-2}	9.45×10^{-3}	6.08×10^{-3}	2.89×10^{-2}	6.02×10^{-3}	4.63×10^{-2}	2.98×10^{-2}
	65	4.85×10^{-2}	3.12×10^{-2}	1.01×10^{-2}	6.48×10^{-3}	3.06×10^{-2}	6.40×10^{-3}	3.91×10^{-2}	2.51×10^{-2}
	65L	3.58×10^{-2}	2.30×10^{-2}	7.73×10^{-3}	4.97×10^{-3}	2.28×10^{-2}	4.93×10^{-3}	3.91×10^{-2}	2.51×10^{-2}

Model No.		Equivalent factor							
		K_{AR1}	K_{AL1}	K_{AR2}	K_{AL2}	K_{B1}	K_{B2}	K_{CR}	K_{CL}
SVS	25	1.09×10^{-1}	9.14×10^{-2}	2.17×10^{-2}	1.82×10^{-2}	1.00×10^{-1}	2.00×10^{-2}	9.95×10^{-2}	8.35×10^{-2}
	25L	8.82×10^{-2}	7.40×10^{-2}	1.78×10^{-2}	1.50×10^{-2}	8.13×10^{-2}	1.64×10^{-2}	9.95×10^{-2}	8.35×10^{-2}
	30	9.71×10^{-2}	8.15×10^{-2}	1.82×10^{-2}	1.52×10^{-2}	8.95×10^{-2}	1.67×10^{-2}	8.78×10^{-2}	7.37×10^{-2}
	30L	7.29×10^{-2}	6.11×10^{-2}	1.51×10^{-2}	1.27×10^{-2}	6.72×10^{-2}	1.39×10^{-2}	8.78×10^{-2}	7.37×10^{-2}
	35	8.84×10^{-2}	7.42×10^{-2}	1.61×10^{-2}	1.35×10^{-2}	8.14×10^{-2}	1.48×10^{-2}	7.36×10^{-2}	6.17×10^{-2}
	35L	6.56×10^{-2}	5.50×10^{-2}	1.34×10^{-2}	1.13×10^{-2}	6.04×10^{-2}	1.24×10^{-2}	7.36×10^{-2}	6.17×10^{-2}
	45	6.48×10^{-2}	5.44×10^{-2}	1.30×10^{-2}	1.09×10^{-2}	5.98×10^{-2}	1.20×10^{-2}	5.45×10^{-2}	4.57×10^{-2}
	45L	5.22×10^{-2}	4.38×10^{-2}	1.07×10^{-2}	8.94×10^{-3}	4.81×10^{-2}	9.81×10^{-3}	5.44×10^{-2}	4.56×10^{-2}
	55	5.67×10^{-2}	4.76×10^{-2}	1.10×10^{-2}	9.24×10^{-3}	5.23×10^{-2}	1.01×10^{-2}	4.78×10^{-2}	4.01×10^{-2}
	55L	4.39×10^{-2}	3.68×10^{-2}	9.12×10^{-3}	7.65×10^{-3}	4.05×10^{-2}	8.40×10^{-3}	4.78×10^{-2}	4.01×10^{-2}
	65	4.67×10^{-2}	3.92×10^{-2}	9.72×10^{-3}	8.15×10^{-3}	4.30×10^{-2}	8.95×10^{-3}	4.04×10^{-2}	3.39×10^{-2}
	65L	3.46×10^{-2}	2.90×10^{-2}	7.46×10^{-3}	6.26×10^{-3}	3.19×10^{-2}	6.88×10^{-3}	4.04×10^{-2}	3.39×10^{-2}
SHW	12	2.48×10^{-1}		4.69×10^{-2}		2.48×10^{-1}	4.69×10^{-2}	1.40×10^{-1}	
	12HR	1.70×10^{-1}		3.52×10^{-2}		1.70×10^{-1}	3.52×10^{-2}	1.40×10^{-1}	
	14	1.92×10^{-1}		3.80×10^{-2}		1.92×10^{-1}	3.80×10^{-2}	9.93×10^{-2}	
	17	1.72×10^{-1}		3.41×10^{-2}		1.72×10^{-1}	3.41×10^{-2}	6.21×10^{-2}	
	21	1.59×10^{-1}		2.95×10^{-2}		1.59×10^{-1}	2.95×10^{-2}	5.57×10^{-2}	
	27	1.21×10^{-1}		2.39×10^{-2}		1.21×10^{-1}	2.39×10^{-2}	4.99×10^{-2}	
	35	8.15×10^{-2}		1.64×10^{-2}		8.15×10^{-2}	1.64×10^{-2}	3.02×10^{-2}	
	50	6.22×10^{-2}		1.24×10^{-2}		6.22×10^{-2}	1.24×10^{-2}	2.30×10^{-2}	
SRS	5M	6.33×10^{-1}		9.20×10^{-2}		6.45×10^{-1}	9.30×10^{-2}	3.85×10^{-1}	
	5GM	6.71×10^{-1}		9.15×10^{-2}		6.66×10^{-1}	9.08×10^{-2}	3.85×10^{-1}	
	5N	5.23×10^{-1}		7.87×10^{-2}		5.32×10^{-1}	7.99×10^{-2}	3.86×10^{-1}	
	5GN	5.25×10^{-1}		7.97×10^{-2}		5.33×10^{-1}	8.12×10^{-2}	3.84×10^{-1}	
	5WM	4.48×10^{-1}		7.30×10^{-2}		4.56×10^{-1}	7.40×10^{-2}	1.96×10^{-1}	
	5WGM	4.58×10^{-1}		7.39×10^{-2}		4.54×10^{-1}	7.34×10^{-2}	1.96×10^{-1}	
	5WN	3.31×10^{-1}		5.93×10^{-2}		3.36×10^{-1}	6.02×10^{-2}	1.96×10^{-1}	
	5WGN	3.31×10^{-1}		5.97×10^{-2}		3.35×10^{-1}	6.05×10^{-2}	1.96×10^{-1}	
	7S	6.03×10^{-1}		7.65×10^{-2}		6.27×10^{-1}	7.91×10^{-2}	2.58×10^{-1}	
	7GS	5.92×10^{-1}		7.89×10^{-2}		6.14×10^{-1}	8.17×10^{-2}	2.58×10^{-1}	
	7M	4.19×10^{-1}		6.76×10^{-2}		4.18×10^{-1}	6.94×10^{-2}	2.58×10^{-1}	
	7GM	4.27×10^{-1}		6.04×10^{-2}		4.43×10^{-1}	6.23×10^{-2}	2.34×10^{-1}	
	7N	2.97×10^{-1}		5.35×10^{-2}		3.07×10^{-1}	5.50×10^{-2}	2.58×10^{-1}	
	7GN	3.11×10^{-1}		5.35×10^{-2}		3.20×10^{-1}	5.51×10^{-2}	2.58×10^{-1}	
	7WS	4.67×10^{-1}		6.89×10^{-2}		4.84×10^{-1}	7.08×10^{-2}	1.36×10^{-1}	
	7WGS	5.23×10^{-1}		6.75×10^{-2}		5.43×10^{-1}	6.95×10^{-2}	1.36×10^{-1}	
	7WM	3.01×10^{-1}		5.32×10^{-2}		3.00×10^{-1}	5.46×10^{-2}	1.36×10^{-1}	
	7WGM	2.83×10^{-1}		4.87×10^{-2}		2.93×10^{-1}	5.02×10^{-2}	1.24×10^{-1}	
	7WN	2.19×10^{-1}		4.16×10^{-2}		2.24×10^{-1}	4.28×10^{-2}	1.36×10^{-1}	
	7WGN	2.20×10^{-1}		4.17×10^{-2}		2.27×10^{-1}	4.31×10^{-2}	1.36×10^{-1}	

K_{AR1} : Equivalent factor in the M_A radial direction when one LM block is used
K_{AL1} : Equivalent factor in the M_A reverse radial direction when one LM block is used
K_{AR2} : Equivalent factor in the M_A radial direction when two LM blocks are used in close contact with each other
K_{AL2} : Equivalent factor in the M_A reverse radial direction when two LM blocks are used in close contact with each other
K_{B1} : M_B Equivalent factor when one LM block is used
K_{B2} : M_B Equivalent factor when two LM blocks are used in close contact with each other
K_{CR} : Equivalent factor in the M_C radial direction
K_{CL} : Equivalent factor in the M_C reverse radial direction

Table2 Equivalent Factors (Models SRS, SCR, EPF and HSR)

Model No.		Equivalent factor							
		K_{AR1}	K_{AL1}	K_{AR2}	K_{AL2}	K_{B1}	K_{B2}	K_{CR}	K_{CL}
SRS	9XS	4.86×10^{-1}		6.89×10^{-2}		5.04×10^{-1}	7.11×10^{-2}	2.17×10^{-1}	
	9XGS	5.37×10^{-1}		6.77×10^{-2}		5.57×10^{-1}	7.00×10^{-2}	2.17×10^{-1}	
	9XM	2.95×10^{-1}		5.27×10^{-2}		3.06×10^{-1}	5.43×10^{-2}	2.17×10^{-1}	
	9XGM	3.10×10^{-1}		5.28×10^{-2}		3.19×10^{-1}	5.44×10^{-2}	2.17×10^{-1}	
	9XN	2.13×10^{-1}		4.12×10^{-2}		2.19×10^{-1}	4.23×10^{-2}	2.17×10^{-1}	
	9XGN	2.18×10^{-1}		4.14×10^{-2}		2.24×10^{-1}	4.27×10^{-2}	2.17×10^{-1}	
	9WS	4.10×10^{-1}		5.73×10^{-2}		4.25×10^{-1}	5.63×10^{-2}	1.06×10^{-1}	
	9WGS	4.16×10^{-1}		5.80×10^{-2}		4.30×10^{-1}	5.98×10^{-2}	1.06×10^{-1}	
	9WM	2.37×10^{-1}		4.25×10^{-2}		2.44×10^{-1}	4.37×10^{-2}	1.06×10^{-1}	
	9WGM	2.41×10^{-1}		4.80×10^{-2}		2.41×10^{-1}	4.13×10^{-2}	1.06×10^{-1}	
	9WN	1.74×10^{-1}		3.35×10^{-2}		1.78×10^{-1}	3.44×10^{-2}	1.06×10^{-1}	
	9WGN	1.75×10^{-1}		3.38×10^{-2}		1.73×10^{-1}	3.32×10^{-2}	1.06×10^{-1}	
	12S	4.55×10^{-1}		5.60×10^{-2}		4.55×10^{-1}	5.60×10^{-2}	1.52×10^{-1}	
	12GS	5.04×10^{-1}		5.51×10^{-2}		5.04×10^{-1}	5.51×10^{-2}	1.52×10^{-1}	
	12M	2.94×10^{-1}		4.50×10^{-2}		2.94×10^{-1}	4.50×10^{-2}	1.53×10^{-1}	
	12GM	2.93×10^{-1}		4.49×10^{-2}		2.93×10^{-1}	4.49×10^{-2}	1.53×10^{-1}	
	12N	1.86×10^{-1}		3.51×10^{-2}		1.86×10^{-1}	3.51×10^{-2}	1.53×10^{-1}	
	12GN	1.96×10^{-1}		3.50×10^{-2}		1.96×10^{-1}	3.50×10^{-2}	1.53×10^{-1}	
	12WS	3.22×10^{-1}		5.00×10^{-2}		3.22×10^{-1}	5.00×10^{-2}	7.97×10^{-2}	
	12WGS	3.32×10^{-1}		5.07×10^{-2}		3.32×10^{-1}	5.07×10^{-2}	7.97×10^{-2}	
	12WM	2.00×10^{-1}		3.69×10^{-2}		2.00×10^{-1}	3.69×10^{-2}	7.97×10^{-2}	
	12WGM	2.07×10^{-1}		3.64×10^{-2}		2.07×10^{-1}	3.64×10^{-2}	7.96×10^{-2}	
	12WN	1.44×10^{-1}		2.83×10^{-2}		1.44×10^{-1}	2.83×10^{-2}	7.97×10^{-2}	
	12WGN	1.46×10^{-1}		2.85×10^{-2}		1.46×10^{-1}	2.85×10^{-2}	7.95×10^{-2}	
	15S	3.56×10^{-1}		4.38×10^{-2}		3.56×10^{-1}	4.38×10^{-2}	1.41×10^{-1}	
	15GS	3.37×10^{-1}		4.57×10^{-2}		3.37×10^{-1}	4.57×10^{-2}	1.41×10^{-1}	
	15M	2.17×10^{-1}		3.69×10^{-2}		2.17×10^{-1}	3.69×10^{-2}	1.41×10^{-1}	
	15GM	2.31×10^{-1}		3.61×10^{-2}		2.31×10^{-1}	3.61×10^{-2}	1.41×10^{-1}	
	15N	1.43×10^{-1}		2.73×10^{-2}		1.43×10^{-1}	2.73×10^{-2}	1.41×10^{-1}	
	15GN	1.45×10^{-1}		2.75×10^{-2}		1.45×10^{-1}	2.75×10^{-2}	1.41×10^{-1}	
	15WS	2.34×10^{-1}		3.76×10^{-2}		2.34×10^{-1}	3.76×10^{-2}	4.83×10^{-2}	
	15WGS	2.34×10^{-1}		3.81×10^{-2}		2.34×10^{-1}	3.81×10^{-2}	4.84×10^{-2}	
	15WM	1.67×10^{-1}		2.94×10^{-2}		1.67×10^{-1}	2.94×10^{-2}	4.83×10^{-2}	
	15WGM	1.63×10^{-1}		2.93×10^{-2}		1.63×10^{-1}	2.93×10^{-2}	4.83×10^{-2}	
	15WN	1.13×10^{-1}		2.27×10^{-2}		1.13×10^{-1}	2.27×10^{-2}	4.83×10^{-2}	
	15WGN	1.15×10^{-1}		2.28×10^{-2}		1.15×10^{-1}	2.28×10^{-2}	4.83×10^{-2}	
	20M	1.80×10^{-1}		3.30×10^{-2}		1.86×10^{-1}	3.41×10^{-2}	9.34×10^{-2}	
	20GM	2.10×10^{-1}		3.88×10^{-2}		2.10×10^{-1}	3.87×10^{-2}	1.03×10^{-1}	
	25M	1.14×10^{-1}		2.17×10^{-2}		1.14×10^{-1}	2.17×10^{-2}	8.13×10^{-2}	
	25GM	1.23×10^{-1}		2.32×10^{-2}		1.23×10^{-1}	2.32×10^{-2}	8.75×10^{-2}	

Model No.		Equivalent factor							
		K_{AR1}	K_{AL1}	K_{AR2}	K_{AL2}	K_{B1}	K_{B2}	K_{CR}	K_{CL}
SCR	15S	1.38×10^{-1}		2.69×10^{-2}		1.38×10^{-1}		1.50×10^{-1}	
	20S	1.15×10^{-1}		2.18×10^{-2}		1.15×10^{-1}		1.06×10^{-1}	
	20	8.85×10^{-2}		1.79×10^{-2}		8.85×10^{-2}		1.06×10^{-1}	
	25	9.25×10^{-2}		1.90×10^{-2}		9.25×10^{-2}	1.90×10^{-2}	9.29×10^{-2}	
	30	8.47×10^{-2}		1.63×10^{-2}		8.47×10^{-2}	1.63×10^{-2}	7.69×10^{-2}	
	35	6.95×10^{-2}		1.43×10^{-2}		6.95×10^{-2}	1.43×10^{-2}	6.29×10^{-2}	
	45	6.13×10^{-2}		1.24×10^{-2}		6.13×10^{-2}	1.24×10^{-2}	4.69×10^{-2}	
	65	3.87×10^{-2}		7.91×10^{-3}		3.87×10^{-2}	7.91×10^{-3}	3.40×10^{-2}	
EPF	7M	3.55×10^{-1}		—		3.55×10^{-1}		2.86×10^{-1}	
	9M	3.10×10^{-1}		—		3.10×10^{-1}		2.22×10^{-1}	
	12M	2.68×10^{-1}		—		2.68×10^{-1}		1.67×10^{-1}	
	15M	2.00×10^{-1}		—		2.00×10^{-1}		1.34×10^{-1}	
HSR	8	4.39×10^{-1}		6.75×10^{-2}		4.39×10^{-1}	6.75×10^{-2}	2.97×10^{-1}	
	10	3.09×10^{-1}		5.33×10^{-2}		3.09×10^{-1}	5.33×10^{-2}	2.35×10^{-1}	
	12	2.08×10^{-1}		3.74×10^{-2}		2.08×10^{-1}	3.74×10^{-2}	1.91×10^{-1}	
	15	1.66×10^{-1}		2.98×10^{-2}		1.66×10^{-1}	2.98×10^{-2}	1.57×10^{-1}	
	20	1.26×10^{-1}		2.28×10^{-2}		1.26×10^{-1}	2.28×10^{-2}	1.17×10^{-1}	
	20L	9.88×10^{-2}		1.92×10^{-2}		9.88×10^{-2}	1.92×10^{-2}	1.17×10^{-1}	
	25	1.12×10^{-1}		2.02×10^{-2}		1.12×10^{-1}	2.02×10^{-2}	9.96×10^{-2}	
	25L	8.23×10^{-2}		1.70×10^{-2}		8.23×10^{-2}	1.70×10^{-2}	9.96×10^{-2}	
	30	8.97×10^{-2}		1.73×10^{-2}		8.97×10^{-2}	1.73×10^{-2}	8.24×10^{-2}	
	30L	7.05×10^{-2}		1.44×10^{-2}		7.05×10^{-2}	1.44×10^{-2}	8.24×10^{-2}	
	35	7.85×10^{-2}		1.56×10^{-2}		7.85×10^{-2}	1.56×10^{-2}	6.69×10^{-2}	
	35L	6.17×10^{-2}		1.29×10^{-2}		6.17×10^{-2}	1.29×10^{-2}	6.69×10^{-2}	
	45	6.73×10^{-2}		1.21×10^{-2}		6.73×10^{-2}	1.21×10^{-2}	5.20×10^{-2}	
	45L	5.22×10^{-2}		1.01×10^{-2}		5.22×10^{-2}	1.01×10^{-2}	5.20×10^{-2}	
	55	5.61×10^{-2}		1.03×10^{-2}		5.61×10^{-2}	1.03×10^{-2}	4.26×10^{-2}	
	55L	4.35×10^{-2}		8.56×10^{-3}		4.35×10^{-2}	8.56×10^{-3}	4.26×10^{-2}	
	65	4.49×10^{-2}		9.13×10^{-3}		4.49×10^{-2}	9.13×10^{-3}	3.68×10^{-2}	
	65L	3.29×10^{-2}		7.08×10^{-3}		3.29×10^{-2}	7.08×10^{-3}	3.68×10^{-2}	
	85	3.49×10^{-2}		6.94×10^{-3}		3.49×10^{-2}	6.94×10^{-3}	2.78×10^{-2}	
	85L	2.74×10^{-2}		5.72×10^{-3}		2.74×10^{-2}	5.72×10^{-3}	2.78×10^{-2}	
	100	2.61×10^{-2}		5.16×10^{-3}		2.61×10^{-2}	5.16×10^{-3}	2.24×10^{-2}	
	120	2.37×10^{-2}		4.72×10^{-3}		2.37×10^{-2}	4.72×10^{-3}	1.96×10^{-2}	
	150	2.17×10^{-2}		4.35×10^{-3}		2.17×10^{-2}	4.35×10^{-3}	1.61×10^{-2}	
	15M2A	1.65×10^{-1}		2.89×10^{-2}		1.65×10^{-1}	2.89×10^{-2}	1.86×10^{-1}	
	20M2A	1.23×10^{-1}		2.23×10^{-2}		1.23×10^{-1}	2.23×10^{-2}	1.34×10^{-1}	
	25M2A	1.10×10^{-1}		1.98×10^{-2}		1.10×10^{-1}	1.98×10^{-2}	1.14×10^{-1}	

K_{AR1} : Equivalent factor in the M_A radial direction when one LM block is used
K_{AL1} : Equivalent factor in the M_A reverse radial direction when one LM block is used
K_{AR2} : Equivalent factor in the M_A radial direction when two LM blocks are used in close contact with each other
K_{AL2} : Equivalent factor in the M_A reverse radial direction when two LM blocks are used in close contact with each other
K_{B1} : M_B Equivalent factor when one LM block is used
K_{B2} : M_B Equivalent factor when two LM blocks are used in close contact with each other
K_{CR} : Equivalent factor in the M_C radial direction
K_{CL} : Equivalent factor in the M_C reverse radial direction

Table3 Equivalent Factors (Models SR, NR-X and NR)

Model No.		Equivalent factor							
		K_{AR1}	K_{AL1}	K_{AR2}	K_{AL2}	K_{B1}	K_{B2}	K_{CR}	K_{CL}
SR	15W (TB)	2.08×10^{-1}	1.04×10^{-1}	3.72×10^{-2}	1.86×10^{-2}	1.46×10^{-1}	2.57×10^{-2}	1.69×10^{-1}	8.43×10^{-2}
	15V (SB)	3.40×10^{-1}	1.70×10^{-1}	5.00×10^{-2}	2.50×10^{-2}	2.34×10^{-1}	3.37×10^{-2}	1.69×10^{-1}	8.43×10^{-2}
	20W (TB)	1.71×10^{-1}	8.56×10^{-2}	3.23×10^{-2}	1.61×10^{-2}	1.20×10^{-1}	2.24×10^{-2}	1.28×10^{-1}	6.40×10^{-2}
	20V (SB)	2.69×10^{-1}	1.34×10^{-1}	4.34×10^{-2}	2.17×10^{-2}	1.86×10^{-1}	2.95×10^{-2}	1.28×10^{-1}	6.39×10^{-2}
	25W (TB)	1.37×10^{-1}	6.85×10^{-2}	2.57×10^{-2}	1.29×10^{-2}	9.61×10^{-2}	1.78×10^{-2}	1.09×10^{-1}	5.47×10^{-2}
	25V (SB)	2.15×10^{-1}	1.08×10^{-1}	3.47×10^{-2}	1.73×10^{-2}	1.49×10^{-1}	2.36×10^{-2}	1.10×10^{-1}	5.48×10^{-2}
	30W (TB)	1.14×10^{-1}	5.71×10^{-2}	2.21×10^{-2}	1.10×10^{-2}	8.01×10^{-2}	1.54×10^{-2}	9.16×10^{-2}	4.58×10^{-2}
	30V (SB)	1.98×10^{-1}	9.92×10^{-2}	2.98×10^{-2}	1.49×10^{-2}	1.37×10^{-1}	2.01×10^{-2}	9.16×10^{-2}	4.58×10^{-2}
	35W (TB)	1.04×10^{-1}	5.21×10^{-2}	1.91×10^{-2}	9.57×10^{-3}	7.30×10^{-2}	1.32×10^{-2}	7.59×10^{-2}	3.80×10^{-2}
	35V (SB)	1.70×10^{-1}	8.50×10^{-2}	2.61×10^{-2}	1.31×10^{-2}	1.17×10^{-1}	1.77×10^{-2}	7.59×10^{-2}	3.80×10^{-2}
	45W (TB)	9.11×10^{-2}	4.56×10^{-2}	1.69×10^{-2}	8.44×10^{-3}	6.38×10^{-2}	1.17×10^{-2}	5.67×10^{-2}	2.83×10^{-2}
	55W (TB)	6.85×10^{-2}	3.42×10^{-2}	1.37×10^{-2}	6.86×10^{-3}	4.80×10^{-2}	9.57×10^{-3}	5.38×10^{-2}	2.69×10^{-2}
	15MSV	4.00×10^{-1}	2.48×10^{-1}	5.89×10^{-2}	3.65×10^{-2}	3.51×10^{-1}	4.98×10^{-2}	2.76×10^{-1}	1.71×10^{-1}
	15MSW	2.43×10^{-1}	1.50×10^{-1}	4.38×10^{-2}	2.72×10^{-2}	2.17×10^{-1}	3.84×10^{-2}	2.74×10^{-1}	1.70×10^{-1}
	20MSV	3.19×10^{-1}	1.97×10^{-1}	5.09×10^{-2}	3.16×10^{-2}	2.77×10^{-1}	4.36×10^{-2}	2.10×10^{-1}	1.30×10^{-1}
	20MSW	1.99×10^{-1}	1.24×10^{-1}	3.77×10^{-2}	2.34×10^{-2}	1.78×10^{-1}	3.33×10^{-2}	2.09×10^{-1}	1.30×10^{-1}
NR-X	25	11.90×10^{-2}	7.64×10^{-2}	2.24×10^{-2}	14.3×10^{-3}	7.47×10^{-2}	1.41×10^{-2}	9.69×10^{-2}	6.2×10^{-2}
	25L	9.18×10^{-2}	5.87×10^{-2}	1.85×10^{-2}	11.8×10^{-3}	5.78×10^{-2}	1.17×10^{-2}	9.69×10^{-2}	6.2×10^{-2}
	30	9.95×10^{-2}	6.37×10^{-2}	1.90×10^{-2}	12.1×10^{-3}	6.23×10^{-2}	1.19×10^{-2}	8.55×10^{-2}	5.47×10^{-2}
	30L	7.65×10^{-2}	4.89×10^{-2}	1.57×10^{-2}	10.0×10^{-3}	4.82×10^{-2}	0.99×10^{-2}	8.55×10^{-2}	5.47×10^{-2}
	35	9.08×10^{-2}	5.81×10^{-2}	1.69×10^{-2}	10.8×10^{-3}	5.67×10^{-2}	1.06×10^{-2}	7.17×10^{-2}	4.59×10^{-2}
	35L	6.88×10^{-2}	4.40×10^{-2}	1.40×10^{-2}	8.9×10^{-3}	4.32×10^{-2}	0.88×10^{-2}	7.17×10^{-2}	4.59×10^{-2}
	45	7.02×10^{-2}	4.50×10^{-2}	1.35×10^{-2}	8.6×10^{-3}	4.37×10^{-2}	0.84×10^{-2}	5.31×10^{-2}	3.4×10^{-2}
	45L	5.25×10^{-2}	3.36×10^{-2}	1.11×10^{-2}	7.1×10^{-3}	3.31×10^{-2}	0.70×10^{-2}	5.32×10^{-2}	3.41×10^{-2}
	55	5.92×10^{-2}	3.79×10^{-2}	1.15×10^{-2}	7.3×10^{-3}	3.72×10^{-2}	0.72×10^{-2}	4.66×10^{-2}	2.98×10^{-2}
	55L	4.66×10^{-2}	2.98×10^{-2}	0.94×10^{-2}	6.0×10^{-3}	2.92×10^{-2}	0.59×10^{-2}	4.65×10^{-2}	2.98×10^{-2}
	65	5.12×10^{-2}	3.28×10^{-2}	1.00×10^{-2}	6.4×10^{-3}	3.21×10^{-2}	0.63×10^{-2}	3.93×10^{-2}	2.52×10^{-2}
	65L	3.66×10^{-2}	2.34×10^{-2}	0.77×10^{-2}	4.9×10^{-3}	2.31×10^{-2}	0.49×10^{-2}	3.93×10^{-2}	2.52×10^{-2}
NR	75	4.21×10^{-2}	2.99×10^{-2}	8.31×10^{-3}	5.90×10^{-3}	3.08×10^{-2}	6.13×10^{-3}	3.16×10^{-2}	2.24×10^{-2}
	75L	3.14×10^{-2}	2.23×10^{-2}	6.74×10^{-3}	4.78×10^{-3}	2.33×10^{-2}	5.04×10^{-3}	3.16×10^{-2}	2.24×10^{-2}
	85	3.70×10^{-2}	2.62×10^{-2}	7.31×10^{-3}	5.19×10^{-3}	2.71×10^{-2}	5.40×10^{-3}	2.80×10^{-2}	1.99×10^{-2}
	85L	2.80×10^{-2}	1.99×10^{-2}	6.07×10^{-3}	4.31×10^{-3}	2.08×10^{-2}	4.55×10^{-3}	2.80×10^{-2}	1.99×10^{-2}
	100	3.05×10^{-2}	2.17×10^{-2}	6.20×10^{-3}	4.41×10^{-3}	2.26×10^{-2}	4.63×10^{-3}	2.38×10^{-2}	1.69×10^{-2}
	100L	2.74×10^{-2}	1.95×10^{-2}	5.46×10^{-3}	3.87×10^{-3}	2.00×10^{-2}	4.00×10^{-3}	2.38×10^{-2}	1.69×10^{-2}

K_{AR1} : Equivalent factor in the M_A radial direction when one LM block is used
K_{AL1} : Equivalent factor in the M_A reverse radial direction when one LM block is used
K_{AR2} : Equivalent factor in the M_A radial direction when two LM blocks are used in close contact with each other
K_{AL2} : Equivalent factor in the M_A reverse radial direction when two LM blocks are used in close contact with each other
K_{B1} : M_B Equivalent factor when one LM block is used
K_{B2} : M_B Equivalent factor when two LM blocks are used in close contact with each other
K_{CR} : Equivalent factor in the M_C radial direction
K_{CL} : Equivalent factor in the M_C reverse radial direction

Table4 Equivalent Factors (Models NRS-X, NRS, HRW and RSR)

Model No.		Equivalent factor							
		K_{AR1}	K_{AL1}	K_{AR2}	K_{AL2}	K_{B1}	K_{B2}	K_{CR}	K_{CL}
NRS-X	25	11.50×10^{-2}	9.66×10^{-2}	2.16×10^{-2}	18.1×10^{-3}	10.57×10^{-2}	1.98×10^{-2}	9.51×10^{-2}	7.99×10^{-2}
	25L	8.85×10^{-2}	7.44×10^{-2}	1.79×10^{-2}	15.0×10^{-3}	8.14×10^{-2}	1.64×10^{-2}	9.51×10^{-2}	7.99×10^{-2}
	30	9.58×10^{-2}	8.05×10^{-2}	1.83×10^{-2}	15.3×10^{-3}	8.81×10^{-2}	1.68×10^{-2}	8.40×10^{-2}	7.05×10^{-2}
	30L	7.38×10^{-2}	6.20×10^{-2}	1.51×10^{-2}	12.7×10^{-3}	6.79×10^{-2}	1.39×10^{-2}	8.40×10^{-2}	7.05×10^{-2}
	35	8.73×10^{-2}	7.33×10^{-2}	1.62×10^{-2}	13.6×10^{-3}	8.03×10^{-2}	1.49×10^{-2}	7.04×10^{-2}	5.91×10^{-2}
	35L	6.63×10^{-2}	5.57×10^{-2}	1.35×10^{-2}	11.3×10^{-3}	6.10×10^{-2}	1.24×10^{-2}	7.04×10^{-2}	5.91×10^{-2}
	45	6.78×10^{-2}	5.69×10^{-2}	1.30×10^{-2}	10.9×10^{-3}	6.23×10^{-2}	1.19×10^{-2}	5.22×10^{-2}	4.39×10^{-2}
	45L	5.07×10^{-2}	4.26×10^{-2}	1.07×10^{-2}	9.0×10^{-3}	4.66×10^{-2}	0.99×10^{-2}	5.22×10^{-2}	4.39×10^{-2}
	55	5.71×10^{-2}	4.79×10^{-2}	1.10×10^{-2}	9.3×10^{-3}	5.25×10^{-2}	1.01×10^{-2}	4.58×10^{-2}	3.84×10^{-2}
	55L	4.50×10^{-2}	3.78×10^{-2}	0.91×10^{-2}	7.7×10^{-3}	4.14×10^{-2}	0.84×10^{-2}	4.57×10^{-2}	3.84×10^{-2}
	65	4.93×10^{-2}	4.14×10^{-2}	0.97×10^{-2}	8.1×10^{-3}	4.53×10^{-2}	0.89×10^{-2}	3.86×10^{-2}	3.25×10^{-2}
	65L	3.54×10^{-2}	2.97×10^{-2}	0.75×10^{-2}	6.3×10^{-3}	3.25×10^{-2}	0.69×10^{-2}	3.86×10^{-2}	3.25×10^{-2}
NRS	75	4.05×10^{-2}		8.01×10^{-3}		4.05×10^{-2}	8.01×10^{-3}	3.20×10^{-2}	
	75L	3.03×10^{-2}		6.50×10^{-3}		3.03×10^{-2}	6.50×10^{-3}	3.20×10^{-2}	
	85	3.56×10^{-2}		7.05×10^{-3}		3.56×10^{-2}	7.05×10^{-3}	2.83×10^{-2}	
	85L	2.70×10^{-2}		5.87×10^{-3}		2.70×10^{-2}	5.87×10^{-3}	2.83×10^{-2}	
	100	2.93×10^{-2}		5.97×10^{-3}		2.93×10^{-2}	5.97×10^{-3}	2.41×10^{-2}	
	100L	2.65×10^{-2}		5.27×10^{-3}		2.65×10^{-2}	5.27×10^{-3}	2.41×10^{-2}	
HRW	12	2.72×10^{-1}	1.93×10^{-1}	5.16×10^{-2}	3.65×10^{-2}	5.47×10^{-1}	1.04×10^{-1}	1.40×10^{-1}	9.92×10^{-2}
	14	2.28×10^{-1}	1.61×10^{-1}	4.16×10^{-2}	2.94×10^{-2}	4.54×10^{-1}	8.28×10^{-2}	1.01×10^{-1}	7.18×10^{-2}
	17	1.96×10^{-1}		3.34×10^{-2}		1.96×10^{-1}	3.34×10^{-2}	6.30×10^{-2}	
	21	1.65×10^{-1}		2.90×10^{-2}		1.65×10^{-1}	2.90×10^{-2}	5.89×10^{-2}	
	27	1.30×10^{-1}		2.34×10^{-2}		1.30×10^{-1}	2.34×10^{-2}	5.11×10^{-2}	
	35	8.69×10^{-2}		1.60×10^{-2}		8.69×10^{-2}	1.60×10^{-2}	3.06×10^{-2}	
	50	6.52×10^{-2}		1.22×10^{-2}		6.52×10^{-2}	1.22×10^{-2}	2.35×10^{-2}	
	60	5.80×10^{-2}		1.08×10^{-2}		5.80×10^{-2}	1.08×10^{-2}	1.77×10^{-2}	
RSR	2N	6.81×10^{-1}		1.28×10^{-1}		6.81×10^{-1}	1.28×10^{-1}	8.69×10^{-1}	
	2WN	5.10×10^{-1}		9.32×10^{-2}		5.10×10^{-1}	9.32×10^{-2}	4.54×10^{-1}	
	3M	9.20×10^{-1}		1.27×10^{-1}		9.20×10^{-1}	1.27×10^{-1}	6.06×10^{-1}	
	3N	6.06×10^{-1}		1.01×10^{-1}		6.06×10^{-1}	1.01×10^{-1}	6.06×10^{-1}	
	3W	7.03×10^{-1}		1.06×10^{-1}		7.03×10^{-1}	1.06×10^{-1}	3.17×10^{-1}	
	3WN	4.76×10^{-1}		8.27×10^{-2}		4.76×10^{-1}	8.27×10^{-2}	3.17×10^{-1}	
	14WV	2.10×10^{-1}	1.47×10^{-1}	3.89×10^{-2}	2.73×10^{-2}	1.69×10^{-1}	3.10×10^{-2}	8.22×10^{-2}	5.75×10^{-2}

K_{AR1} : Equivalent factor in the M_A radial direction when one LM block is used
K_{AL1} : Equivalent factor in the M_A reverse radial direction when one LM block is used
K_{AR2} : Equivalent factor in the M_A radial direction when two LM blocks are used in close contact with each other
K_{AL2} : Equivalent factor in the M_A reverse radial direction when two LM blocks are used in close contact with each other
K_{B1} : M_B Equivalent factor when one LM block is used
K_{B2} : M_B Equivalent factor when two LM blocks are used in close contact with each other
K_{CR} : Equivalent factor in the M_C radial direction
K_{CL} : Equivalent factor in the M_C reverse radial direction

Table5 Equivalent Factors (Models HR, GSR, CSR, MX and JR)

Model No.		Equivalent factor							
		K_{AR1}	K_{AL1}	K_{AR2}	K_{AL2}	K_{B1}	K_{B2}	K_{CR}	K_{CL}
HR	918	2.65×10^{-1}		3.58×10^{-2}		2.65×10^{-1}	3.58×10^{-2}	—	—
	1123	2.08×10^{-1}		3.17×10^{-2}		2.08×10^{-1}	3.17×10^{-2}	—	—
	1530	1.56×10^{-1}		2.39×10^{-2}		1.56×10^{-1}	2.39×10^{-2}	—	—
	2042	1.11×10^{-1}		1.80×10^{-2}		1.11×10^{-1}	1.80×10^{-2}	—	—
	2042T	8.64×10^{-2}		1.53×10^{-2}		8.64×10^{-2}	1.53×10^{-2}	—	—
	2555	7.79×10^{-2}		1.38×10^{-2}		7.79×10^{-2}	1.38×10^{-2}	—	—
	2555T	6.13×10^{-2}		1.17×10^{-2}		6.13×10^{-2}	1.17×10^{-2}	—	—
	3065	6.92×10^{-2}		1.15×10^{-2}		6.92×10^{-2}	1.15×10^{-2}	—	—
	3065T	5.45×10^{-2}		9.92×10^{-3}		5.45×10^{-2}	9.92×10^{-3}	—	—
	3575	6.23×10^{-2}		1.08×10^{-2}		6.23×10^{-2}	1.08×10^{-2}	—	—
	3575T	4.90×10^{-2}		9.42×10^{-3}		4.90×10^{-2}	9.42×10^{-3}	—	—
	4085	5.19×10^{-2}		9.53×10^{-3}		5.19×10^{-2}	9.53×10^{-3}	—	—
	4085T	4.09×10^{-2}		7.97×10^{-3}		4.09×10^{-2}	7.97×10^{-3}	—	—
	50105	4.15×10^{-2}		7.40×10^{-3}		4.15×10^{-2}	7.40×10^{-3}	—	—
	50105T	3.27×10^{-2}		6.26×10^{-3}		3.27×10^{-2}	6.26×10^{-3}	—	—
	60125	2.88×10^{-2}		5.18×10^{-3}		2.88×10^{-2}	5.18×10^{-3}	—	—
GSR	15T	1.61×10^{-1}	1.44×10^{-1}	2.88×10^{-2}	2.59×10^{-2}	1.68×10^{-1}	3.01×10^{-2}	—	—
	15V	2.21×10^{-1}	1.99×10^{-1}	3.54×10^{-2}	3.18×10^{-2}	2.30×10^{-1}	3.68×10^{-2}	—	—
	20T	1.28×10^{-1}	1.16×10^{-1}	2.34×10^{-2}	2.10×10^{-2}	1.34×10^{-1}	2.44×10^{-2}	—	—
	20V	1.77×10^{-1}	1.59×10^{-1}	2.87×10^{-2}	2.58×10^{-2}	1.84×10^{-1}	2.99×10^{-2}	—	—
	25T	1.07×10^{-1}	9.63×10^{-2}	1.97×10^{-2}	1.77×10^{-2}	1.12×10^{-1}	2.06×10^{-2}	—	—
	25V	1.47×10^{-1}	1.33×10^{-1}	2.42×10^{-2}	2.18×10^{-2}	1.53×10^{-1}	2.52×10^{-2}	—	—
	30T	9.17×10^{-2}	8.26×10^{-2}	1.68×10^{-2}	1.51×10^{-2}	9.59×10^{-2}	1.76×10^{-2}	—	—
	35T	8.03×10^{-2}	7.22×10^{-2}	1.48×10^{-2}	1.33×10^{-2}	8.39×10^{-2}	1.55×10^{-2}	—	—
CSR	15	1.66×10^{-1}		—		1.66×10^{-1}	—	1.57×10^{-1}	
	20S	1.26×10^{-1}		—		1.26×10^{-1}	—	1.17×10^{-1}	
	20	9.88×10^{-2}		—		9.88×10^{-2}	—	1.17×10^{-1}	
	25S	1.12×10^{-1}		—		1.12×10^{-1}	—	9.96×10^{-2}	
	25	8.23×10^{-2}		—		8.23×10^{-2}	—	9.96×10^{-2}	
	30S	8.97×10^{-2}		—		8.97×10^{-2}	—	8.24×10^{-2}	
	30	7.05×10^{-2}		—		7.05×10^{-2}	—	8.24×10^{-2}	
	35	6.17×10^{-2}		—		6.17×10^{-2}	—	6.69×10^{-2}	
	45	5.22×10^{-2}		—		5.22×10^{-2}	—	5.20×10^{-2}	
MX	5	4.27×10^{-1}		7.01×10^{-2}		4.27×10^{-1}	7.01×10^{-2}	3.85×10^{-1}	
	7W	2.18×10^{-1}		4.13×10^{-2}		2.18×10^{-1}	4.13×10^{-2}	1.40×10^{-1}	
JR	25	1.12×10^{-1}		2.02×10^{-2}		1.12×10^{-1}	2.02×10^{-2}	9.96×10^{-2}	
	35	7.85×10^{-2}		1.56×10^{-2}		7.85×10^{-2}	1.56×10^{-2}	6.69×10^{-2}	
	45	6.73×10^{-2}		1.21×10^{-2}		6.73×10^{-2}	1.21×10^{-2}	5.20×10^{-2}	
	55	5.61×10^{-2}		1.03×10^{-2}		5.61×10^{-2}	1.03×10^{-2}	4.26×10^{-2}	

K_{AR1} : Equivalent factor in the M_A radial direction when one LM block is used
K_{AL1} : Equivalent factor in the M_A reverse radial direction when one LM block is used
K_{AR2} : Equivalent factor in the M_A radial direction when two LM blocks are used in close contact with each other
K_{AL2} : Equivalent factor in the M_A reverse radial direction when two LM blocks are used in close contact with each other
K_{B1} : M_B Equivalent factor when one LM block is used
K_{B2} : M_B Equivalent factor when two LM blocks are used in close contact with each other
K_{CR} : Equivalent factor in the M_C radial direction
K_{CL} : Equivalent factor in the M_C reverse radial direction

Table6 Equivalent Factors (Model NSR, SRG, SRN and SRW)

Model No.		Equivalent factor							
		K_{AR1}	K_{AL1}	K_{AR2}	K_{AL2}	K_{B1}	K_{B2}	K_{CR}	K_{CL}
NSR	20TBC	2.29×10^{-1}		2.68×10^{-2}		2.29×10^{-1}	2.68×10^{-2}	—	—
	25TBC	2.01×10^{-1}		2.27×10^{-2}		2.01×10^{-1}	2.27×10^{-2}	—	—
	30TBC	1.85×10^{-1}		1.93×10^{-2}		1.85×10^{-1}	1.93×10^{-2}	—	—
	40TBC	1.39×10^{-1}		1.60×10^{-2}		1.39×10^{-1}	1.60×10^{-2}	—	—
	50TBC	1.24×10^{-1}		1.42×10^{-2}		1.24×10^{-1}	1.42×10^{-2}	—	—
	70TBC	9.99×10^{-2}		1.15×10^{-2}		9.99×10^{-2}	1.15×10^{-2}	—	—
SRG	15	1.23×10^{-1}		2.07×10^{-2}		1.23×10^{-1}	2.07×10^{-2}	1.04×10^{-1}	
	20	9.60×10^{-2}		1.71×10^{-2}		9.60×10^{-2}	1.71×10^{-2}	8.00×10^{-2}	
	20L	7.21×10^{-2}		1.42×10^{-2}		7.21×10^{-2}	1.42×10^{-2}	8.00×10^{-2}	
	25	8.96×10^{-2}		1.55×10^{-2}		8.96×10^{-2}	1.55×10^{-2}	7.23×10^{-2}	
	25L	6.99×10^{-2}		1.31×10^{-2}		6.99×10^{-2}	1.31×10^{-2}	7.23×10^{-2}	
	30	8.06×10^{-2}		1.33×10^{-2}		8.06×10^{-2}	1.33×10^{-2}	5.61×10^{-2}	
	30L	6.12×10^{-2}		1.11×10^{-2}		6.12×10^{-2}	1.11×10^{-2}	5.61×10^{-2}	
	35	7.14×10^{-2}		1.18×10^{-2}		7.14×10^{-2}	1.18×10^{-2}	4.98×10^{-2}	
	35L	5.26×10^{-2}		9.67×10^{-3}		5.26×10^{-2}	9.67×10^{-3}	4.98×10^{-2}	
	35SL	4.40×10^{-2}		8.34×10^{-3}		4.40×10^{-2}	8.34×10^{-3}	4.98×10^{-2}	
	45	5.49×10^{-2}		9.58×10^{-3}		5.49×10^{-2}	9.58×10^{-3}	3.85×10^{-2}	
	45L	4.18×10^{-2}		7.93×10^{-3}		4.18×10^{-2}	7.93×10^{-3}	3.85×10^{-2}	
	45SL	3.28×10^{-2}		6.56×10^{-3}		3.28×10^{-2}	6.56×10^{-3}	3.85×10^{-2}	
	55	4.56×10^{-2}		8.04×10^{-3}		4.56×10^{-2}	8.04×10^{-3}	3.25×10^{-2}	
	55L	3.37×10^{-2}		6.42×10^{-3}		3.37×10^{-2}	6.42×10^{-3}	3.25×10^{-2}	
	55SL	2.56×10^{-2}		5.22×10^{-3}		2.56×10^{-2}	5.22×10^{-3}	3.25×10^{-2}	
	65	3.54×10^{-2}		6.06×10^{-3}		3.54×10^{-2}	6.06×10^{-3}	2.70×10^{-2}	
	65L	2.63×10^{-2}		4.97×10^{-3}		2.63×10^{-2}	4.97×10^{-3}	2.70×10^{-2}	
	65SL	1.97×10^{-2}		4.01×10^{-3}		1.97×10^{-2}	4.01×10^{-3}	2.70×10^{-2}	
	85LC	2.19×10^{-2}		4.15×10^{-3}		2.19×10^{-2}	4.15×10^{-3}	1.91×10^{-2}	
	100LC	1.95×10^{-2}		3.67×10^{-3}		1.95×10^{-2}	3.67×10^{-3}	1.62×10^{-2}	
SRN	35	7.14×10^{-2}		1.18×10^{-2}		7.14×10^{-2}	1.18×10^{-2}	4.98×10^{-2}	
	35L	5.26×10^{-2}		9.67×10^{-3}		5.26×10^{-2}	9.67×10^{-3}	4.98×10^{-2}	
	45	5.49×10^{-2}		9.58×10^{-3}		5.49×10^{-2}	9.58×10^{-3}	3.85×10^{-2}	
	45L	4.18×10^{-2}		7.93×10^{-3}		4.18×10^{-2}	7.93×10^{-3}	3.85×10^{-2}	
	55	4.56×10^{-2}		8.04×10^{-3}		4.56×10^{-2}	8.04×10^{-3}	3.25×10^{-2}	
	55L	3.37×10^{-2}		6.42×10^{-3}		3.37×10^{-2}	6.42×10^{-3}	3.25×10^{-2}	
	65L	2.63×10^{-2}		4.97×10^{-3}		2.63×10^{-2}	4.97×10^{-3}	2.70×10^{-2}	
SRW	70	4.18×10^{-2}		7.93×10^{-3}		4.18×10^{-2}	7.93×10^{-3}	2.52×10^{-2}	
	85	3.37×10^{-2}		6.42×10^{-3}		3.37×10^{-2}	6.42×10^{-3}	2.09×10^{-2}	
	100	2.63×10^{-2}		4.97×10^{-3}		2.63×10^{-2}	4.97×10^{-3}	1.77×10^{-2}	
	130	2.19×10^{-2}		4.15×10^{-3}		2.19×10^{-2}	4.15×10^{-3}	1.33×10^{-2}	
	150	1.95×10^{-2}		3.67×10^{-3}		1.95×10^{-2}	3.67×10^{-3}	1.15×10^{-2}	

K_{AR1} : Equivalent factor in the M_A radial direction when one LM block is used
K_{AL1} : Equivalent factor in the M_A reverse radial direction when one LM block is used
K_{AR2} : Equivalent factor in the M_A radial direction when two LM blocks are used in close contact with each other
K_{AL2} : Equivalent factor in the M_A reverse radial direction when two LM blocks are used in close contact with each other
K_{B1} : M_B Equivalent factor when one LM block is used
K_{B2} : M_B Equivalent factor when two LM blocks are used in close contact with each other
K_{CR} : Equivalent factor in the M_C radial direction
K_{CL} : Equivalent factor in the M_C reverse radial direction

[Double-axis Use]

● Setting Conditions

Set the conditions needed to calculate the LM system's applied load and service life in hours.
The conditions consist of the following items.

(1) Mass: m (kg)
(2) Direction of the working load
(3) Position of the working point (e.g., center of gravity): ℓ_2, ℓ_3, h_1(mm)
(4) Thrust position: ℓ_4, h_2(mm)
(5) LM system arrangement: ℓ_0, ℓ_1(mm)
(No. of units and axes)
(6) Velocity diagram
Speed: V (mm/s)
Time constant: t_n (s)
Acceleration: α_n(mm/s^2)

$$(\alpha_n = \frac{V}{t_n})$$

(7) Duty cycle
Number of reciprocations per minute: N_1(min^{-1})
(8) Stroke length: ℓ_s(mm)
(9) Average speed: V_m(m/s)
(10) Required service life in hours: L_h(h)

Gravitational acceleration g=9.8 (m/s^2)

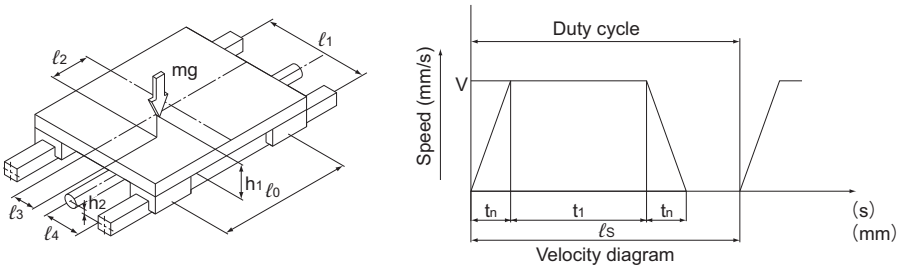

Fig.6 Condition

● Applied Load Equation

The load applied to the LM Guide varies with the external force, such as the position of the gravity center of an object, thrust position, inertia generated from acceleration/deceleration during start or stop, and cutting force.
In selecting an LM Guide, it is necessary to obtain the value of the applied load while taking into account these conditions.

Calculate the load applied to the LM Guide in each of the examples 1 to 10 shown below.

m	: Mass	(kg)
ℓ_n	: Distance	(mm)
F_n	: External force	(N)
P_n	: Applied load (radial/reverse radial direction)	(N)
P_{nT}	: Applied load (lateral directions)	(N)
g	: Gravitational acceleration ($g = 9.8 m/s^2$)	(m/s^2)
V	: Speed	(m/s)
t_n	: Time constant	(s)
α_n	: Acceleration	(m/s^2)

$$(\alpha_n = \frac{V}{t_n})$$

[Example]

	Condition	Applied Load Equation
1	Horizontal mount (with the block traveling) Uniform motion or dwell 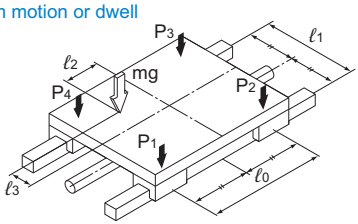 	$P_1 = \frac{mg}{4} + \frac{mg \cdot \ell_2}{2 \cdot \ell_0} - \frac{mg \cdot \ell_3}{2 \cdot \ell_1}$ $P_2 = \frac{mg}{4} - \frac{mg \cdot \ell_2}{2 \cdot \ell_0} - \frac{mg \cdot \ell_3}{2 \cdot \ell_1}$ $P_3 = \frac{mg}{4} - \frac{mg \cdot \ell_2}{2 \cdot \ell_0} + \frac{mg \cdot \ell_3}{2 \cdot \ell_1}$ $P_4 = \frac{mg}{4} + \frac{mg \cdot \ell_2}{2 \cdot \ell_0} + \frac{mg \cdot \ell_3}{2 \cdot \ell_1}$
2	Horizontal mount, overhung (with the block traveling) Uniform motion or dwell 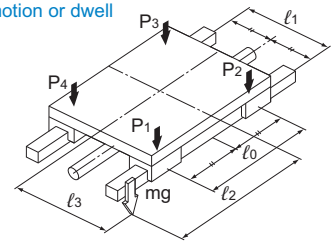 	$P_1 = \frac{mg}{4} + \frac{mg \cdot \ell_2}{2 \cdot \ell_0} + \frac{mg \cdot \ell_3}{2 \cdot \ell_1}$ $P_2 = \frac{mg}{4} - \frac{mg \cdot \ell_2}{2 \cdot \ell_0} + \frac{mg \cdot \ell_3}{2 \cdot \ell_1}$ $P_3 = \frac{mg}{4} - \frac{mg \cdot \ell_2}{2 \cdot \ell_0} - \frac{mg \cdot \ell_3}{2 \cdot \ell_1}$ $P_4 = \frac{mg}{4} + \frac{mg \cdot \ell_2}{2 \cdot \ell_0} - \frac{mg \cdot \ell_3}{2 \cdot \ell_1}$

Note) Load is positive in the direction of the arrow.

	Condition	Applied Load Equation
3	**Vertical mount** **Uniform motion or dwell** 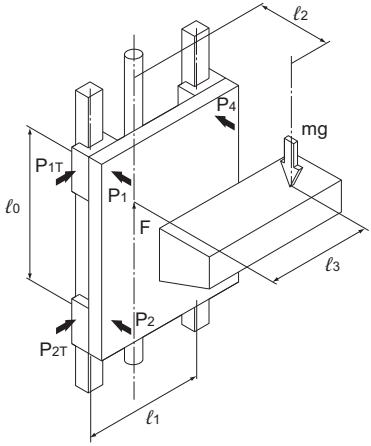 E.g.: Vertical axis of industrial robot, automatic coating machine, lifter	$P_1 = P_4 = -\frac{mg \cdot \ell_2}{2 \cdot \ell_0}$ $P_2 = P_3 = \frac{mg \cdot \ell_2}{2 \cdot \ell_0}$ $P_{1T} = P_{4T} = \frac{mg \cdot \ell_3}{2 \cdot \ell_0}$ $P_{2T} = P_{3T} = -\frac{mg \cdot \ell_3}{2 \cdot \ell_0}$
4	**Wall mount** **Uniform motion or dwell** 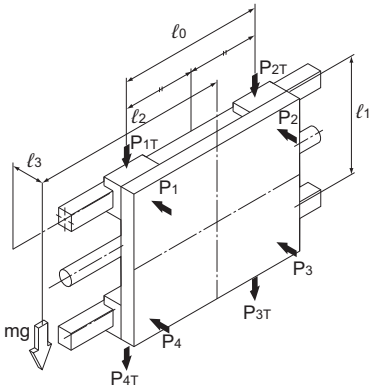 E.g.: Travel axis of cross-rail loader	$P_1 = P_2 = -\frac{mg \cdot \ell_3}{2 \cdot \ell_1}$ $P_3 = P_4 = \frac{mg \cdot \ell_3}{2 \cdot \ell_1}$ $P_{1T} = P_{4T} = \frac{mg}{4} + \frac{mg \cdot \ell_2}{2 \cdot \ell_0}$ $P_{2T} = P_{3T} = \frac{mg}{4} - \frac{mg \cdot \ell_2}{2 \cdot \ell_0}$

Note) Load is positive in the direction of the arrow.

	Condition	Applied Load Equation
5	**With the LM rails movable** **Horizontal mount** 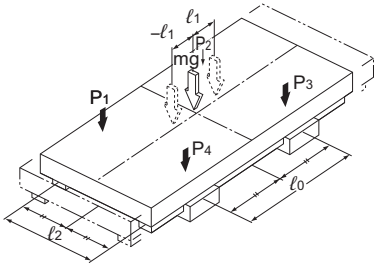 E.g.: XY table sliding fork	P_1 to P_4 (max) $= \frac{mg}{4} + \frac{mg \cdot \ell_1}{2 \cdot \ell_0}$ P_1 to P_4 (min) $= \frac{mg}{4} - \frac{mg \cdot \ell_1}{2 \cdot \ell_0}$
6	**Laterally tilt mount** 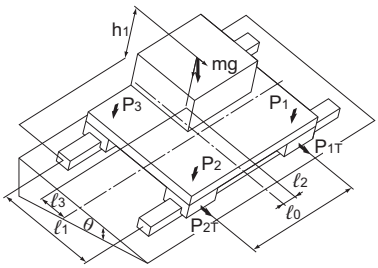 E.g.: NC lathe Carriage	$P_1 = + \frac{mg \cdot \cos\theta}{4} + \frac{mg \cdot \cos\theta \cdot \ell_2}{2 \cdot \ell_0} - \frac{mg \cdot \cos\theta \cdot \ell_3}{2 \cdot \ell_1} + \frac{mg \cdot \sin\theta \cdot h_1}{2 \cdot \ell_1}$ $P_{1T} = \frac{mg \cdot \sin\theta}{4} + \frac{mg \cdot \sin\theta \cdot \ell_2}{2 \cdot \ell_0}$ $P_2 = + \frac{mg \cdot \cos\theta}{4} - \frac{mg \cdot \cos\theta \cdot \ell_2}{2 \cdot \ell_0} - \frac{mg \cdot \cos\theta \cdot \ell_3}{2 \cdot \ell_1} + \frac{mg \cdot \sin\theta \cdot h_1}{2 \cdot \ell_1}$ $P_{2T} = \frac{mg \cdot \sin\theta}{4} - \frac{mg \cdot \sin\theta \cdot \ell_2}{2 \cdot \ell_0}$ $P_3 = + \frac{mg \cdot \cos\theta}{4} - \frac{mg \cdot \cos\theta \cdot \ell_2}{2 \cdot \ell_0} + \frac{mg \cdot \cos\theta \cdot \ell_3}{2 \cdot \ell_1} - \frac{mg \cdot \sin\theta \cdot h_1}{2 \cdot \ell_1}$ $P_{3T} = \frac{mg \cdot \sin\theta}{4} - \frac{mg \cdot \sin\theta \cdot \ell_2}{2 \cdot \ell_0}$ $P_4 = + \frac{mg \cdot \cos\theta}{4} + \frac{mg \cdot \cos\theta \cdot \ell_2}{2 \cdot \ell_0} + \frac{mg \cdot \cos\theta \cdot \ell_3}{2 \cdot \ell_1} - \frac{mg \cdot \sin\theta \cdot h_1}{2 \cdot \ell_1}$ $P_{4T} = \frac{mg \cdot \sin\theta}{4} + \frac{mg \cdot \sin\theta \cdot \ell_2}{2 \cdot \ell_0}$

Note) Load is positive in the direction of the arrow.

	Condition	Applied Load Equation
7	**Longitudinally tilt mount** 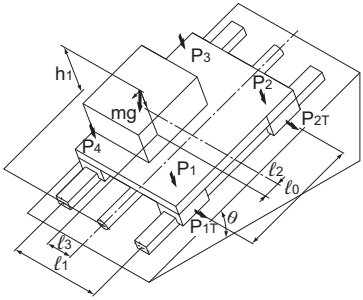 E.g.: NC lathe Tool rest	$P_1 = +\frac{mg\cdot\cos\theta}{4} + \frac{mg\cdot\cos\theta\cdot\ell_2}{2\cdot\ell_0} - \frac{mg\cdot\cos\theta\cdot\ell_3}{2\cdot\ell_1} + \frac{mg\cdot\sin\theta\cdot h_1}{2\cdot\ell_0}$ $P_{1T} = +\frac{mg\cdot\sin\theta\cdot\ell_3}{2\cdot\ell_0}$ $P_2 = +\frac{mg\cdot\cos\theta}{4} - \frac{mg\cdot\cos\theta\cdot\ell_2}{2\cdot\ell_0} - \frac{mg\cdot\cos\theta\cdot\ell_3}{2\cdot\ell_1} - \frac{mg\cdot\sin\theta\cdot h_1}{2\cdot\ell_0}$ $P_{2T} = -\frac{mg\cdot\sin\theta\cdot\ell_3}{2\cdot\ell_0}$ $P_3 = +\frac{mg\cdot\cos\theta}{4} - \frac{mg\cdot\cos\theta\cdot\ell_2}{2\cdot\ell_0} + \frac{mg\cdot\cos\theta\cdot\ell_3}{2\cdot\ell_1} - \frac{mg\cdot\sin\theta\cdot h_1}{2\cdot\ell_0}$ $P_{3T} = -\frac{mg\cdot\sin\theta\cdot\ell_3}{2\cdot\ell_0}$ $P_4 = +\frac{mg\cdot\cos\theta}{4} + \frac{mg\cdot\cos\theta\cdot\ell_2}{2\cdot\ell_0} + \frac{mg\cdot\cos\theta\cdot\ell_3}{2\cdot\ell_1} + \frac{mg\cdot\sin\theta\cdot h_1}{2\cdot\ell_0}$ $P_{4T} = +\frac{mg\cdot\sin\theta\cdot\ell_3}{2\cdot\ell_0}$
8	**Horizontal mount with inertia** 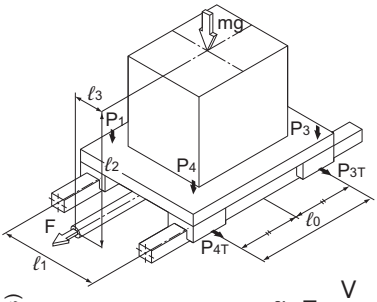 $\alpha_n = \frac{V}{t_n}$ 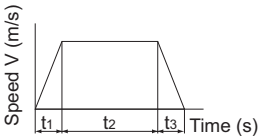 Velocity diagram E.g.: Conveyance truck	During acceleration $P_1 = P_4 = \frac{mg}{4} - \frac{m\cdot\alpha_1\cdot\ell_2}{2\cdot\ell_0}$ $P_2 = P_3 = \frac{mg}{4} + \frac{m\cdot\alpha_1\cdot\ell_2}{2\cdot\ell_0}$ $P_{1T} = P_{4T} = \frac{m\cdot\alpha_1\cdot\ell_3}{2\cdot\ell_0}$ $P_{2T} = P_{3T} = -\frac{m\cdot\alpha_1\cdot\ell_3}{2\cdot\ell_0}$ During uniform motion P_1 to $P_4 = \frac{mg}{4}$ During deceleration $P_1 = P_4 = \frac{mg}{4} + \frac{m\cdot\alpha_3\cdot\ell_2}{2\cdot\ell_0}$ $P_2 = P_3 = \frac{mg}{4} - \frac{m\cdot\alpha_3\cdot\ell_2}{2\cdot\ell_0}$ $P_{1T} = P_{4T} = -\frac{m\cdot\alpha_3\cdot\ell_3}{2\cdot\ell_0}$ $P_{2T} = P_{3T} = \frac{m\cdot\alpha_3\cdot\ell_3}{2\cdot\ell_0}$

Note) Load is positive in the direction of the arrow.

	Condition	Applied Load Equation
9	**Vertical mount with inertia** 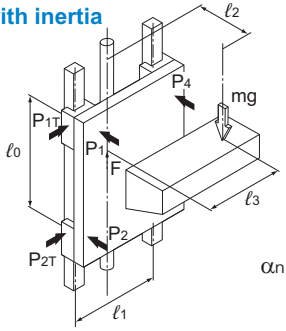 $\alpha_n = \frac{V}{t_n}$ 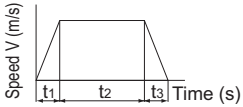 Velocity diagram E.g.: Conveyance lift	During acceleration $P_1 = P_4 = -\frac{m(g+\alpha_1)\ell_2}{2\cdot\ell_0}$ $P_2 = P_3 = \frac{m(g+\alpha_1)\ell_2}{2\cdot\ell_0}$ $P_{1T} = P_{4T} = \frac{m(g+\alpha_1)\ell_3}{2\cdot\ell_0}$ $P_{2T} = P_{3T} = -\frac{m(g+\alpha_1)\ell_3}{2\cdot\ell_0}$ During uniform motion $P_1 = P_4 = -\frac{mg\cdot\ell_2}{2\cdot\ell_0}$ $P_2 = P_3 = \frac{mg\cdot\ell_2}{2\cdot\ell_0}$ $P_{1T} = P_{4T} = \frac{mg\cdot\ell_3}{2\cdot\ell_0}$ $P_{2T} = P_{3T} = -\frac{mg\cdot\ell_3}{2\cdot\ell_0}$ During deceleration $P_1 = P_4 = -\frac{m(g-\alpha_3)\ell_2}{2\cdot\ell_0}$ $P_2 = P_3 = \frac{m(g-\alpha_3)\ell_2}{2\cdot\ell_0}$ $P_{1T} = P_{4T} = \frac{m(g-\alpha_3)\ell_3}{2\cdot\ell_0}$ $P_{2T} = P_{3T} = -\frac{m(g-\alpha_3)\ell_3}{2\cdot\ell_0}$
10	**Horizontal mount with external force** 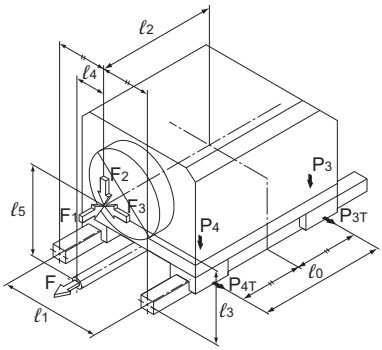 E.g.: Drill unit, Milling machine, Lathe, Machining center and other cutting machine	Under force F_1 $P_1 = P_4 = -\frac{F_1\cdot\ell_5}{2\cdot\ell_0}$ $P_2 = P_3 = \frac{F_1\cdot\ell_5}{2\cdot\ell_0}$ $P_{1T} = P_{4T} = \frac{F_1\cdot\ell_4}{2\cdot\ell_0}$ $P_{2T} = P_{3T} = -\frac{F_1\cdot\ell_4}{2\cdot\ell_0}$ Under force F_2 $P_1 = P_4 = \frac{F_2}{4} + \frac{F_2\cdot\ell_2}{2\cdot\ell_0}$ $P_2 = P_3 = \frac{F_2}{4} - \frac{F_2\cdot\ell_2}{2\cdot\ell_0}$ Under force F_3 $P_1 = P_2 = \frac{F_3\cdot\ell_3}{2\cdot\ell_1}$ $P_3 = P_4 = -\frac{F_3\cdot\ell_3}{2\cdot\ell_1}$ $P_{1T} = P_{4T} = -\frac{F_3}{4} - \frac{F_3\cdot\ell_2}{2\cdot\ell_0}$ $P_{2T} = P_{3T} = -\frac{F_3}{4} + \frac{F_3\cdot\ell_2}{2\cdot\ell_0}$

Note) Load is positive in the direction of the arrow.

Calculating the Equivalent Load

Rated Load of an LM Guide in Each Direction

The LM Guide is categorized into roughly two types: the 4-way equal load type, which has the same rated load in the radial, reverse radial and lateral directions, and the radial type, which has a large rated load in the radial direction. With the radial type LM Guide, the rated load in the radial direction is different from that in the reverse radial and lateral directions. The basic load rating in the radial direction is indicated in the specification table. The values in the reverse-radial and lateral directions are obtained from Table7 on A1-58.

[Rated Loads in All Directions]

Type	Load Distribution Curve
4-way Equal Load Type 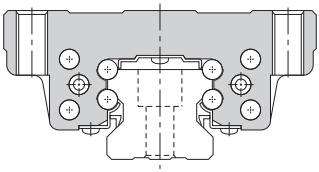	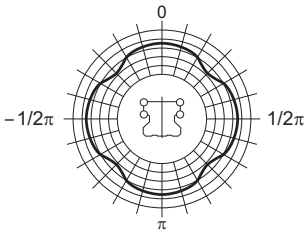
Radial Type 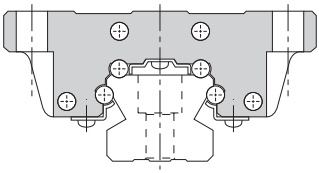	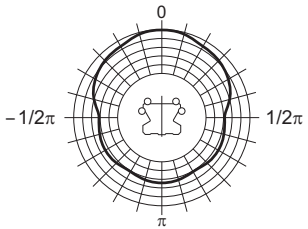

Table7 Rated Loads in All Directions

Classification	Model No.		Reverse radial direction		Lateral directions	
	Type	Size	Dynamic load rating C_L	Static load rating C_{0L}	Dynamic load rating C_T	Static load rating C_{0T}
4-way Equal Load	SHS		C	C_0	C	C_0
	SHW		C	C_0	C	C_0
	SRS	12,15,25	C	C_0	C	C_0
	SCR		C	C_0	C	C_0
	EPF		C	C_0	C	C_0
	HSR		C	C_0	C	C_0
	NRS	75,85,100	C	C_0	C	C_0
	HRW	17,21,27,35,50,60	C	C_0	C	C_0
	RSR	2,3	C	C_0	C	C_0
	CSR		C	C_0	C	C_0
	MX		C	C_0	C	C_0
	JR		C	C_0	C	C_0
	HCR		C	C_0	C	C_0
	HMG		C	C_0	C	C_0
	HSR-M1		C	C_0	C	C_0
	RSR-M1	9	C	C_0	C	C_0
	HSR-M2		C	C_0	C	C_0
	HSR-M1VV		C	C_0	C	C_0
	SRG		C	C_0	C	C_0
	SRN		C	C_0	C	C_0
	SRW		C	C_0	C	C_0
Radial	SSR		0.50C	$0.50C_0$	0.53C	$0.43C_0$
	SVR		0.64C	$0.64C_0$	0.47C	$0.38C_0$
	SR	15,20,25,30,35,45,55,70	0.62C	$0.50C_0$	0.56C	$0.43C_0$
	SR	85,100,120,150	0.78C	$0.71C_0$	0.48C	$0.35C_0$
	NR-X		0.64C	$0.64C_0$	0.47C	$0.38C_0$
	NR	75,85,100	0.78C	$0.71C_0$	0.48C	$0.45C_0$
	HRW	12,14	0.78C	$0.71C_0$	0.48C	$0.35C_0$
	NSR		0.62C	$0.50C_0$	0.56C	$0.43C_0$
	SR-M1		0.62C	$0.50C_0$	0.56C	$0.43C_0$
	SR-MS		0.62C	$0.50C_0$	0.56C	$0.43C_0$
Other	SVS		0.84C	$0.84C_0$	0.92C	$0.85C_0$
	NRS-X		0.84C	$0.84C_0$	0.92C	$0.85C_0$
	SRS	5,7,9,20	C	C_0	1.19C	$1.19C_0$
	RSR	14	0.78C	$0.70C_0$	0.78C	$0.71C_0$
	HR		C	C_0	C	C_0
	GSR		0.93C	$0.90C_0$	(T) 0.84C* (C) 0.93C*	(T) $0.78C_0$* (C) $0.90C_0$*
	GSR-R		0.93C	$0.90C_0$	(T) 0.84C* (C) 0.93C*	(T) $0.78C_0$* (C) $0.90C_0$*
	RSR-M1	12,15	0.78C	$0.70C_0$	0.78C	$0.71C_0$

*(T): Tensile lateral direction; (C): Compressive lateral direction

Note) C and C_0 in the table each represent the basic load rating indicated in the specification table of the respective model.
For types with no size indication in the table, the same factor is applied to all sizes.
Models HR, GSR and GSR-R cannot be used in single-axis applications.

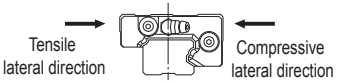

[Equivalent Load P_E]

The LM Guide can bear loads and moments in all directions, including a radial load (PR), reverse radial load (PL) and lateral loads (PT), simultaneously.
When two or more loads (e.g., radial load and lateral load) are simultaneously applied to the LM Guide, the service life and the static safety factor are calculated using equivalent load values obtained by converting all the loads into radial load or reverse radial load.

[Equivalent Load Equation]

When the LM block of the LM Guide receives loads simultaneously in the radial and lateral directions, or the reverse radial and lateral directions, the equivalent load is obtained from the equation below.

$$P_E = X \cdot P_{R(L)} + Y \cdot P_T$$

P_E	:	Equivalent load ·Radial direction ·Reverse radial direction	(N)
P_L	:	Reverse radial load	(N)
P_T	:	Lateral load	(N)
X,Y	:	Equivalent factor	(see Table8)

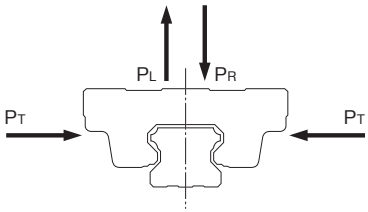

Fig.7 Equivalent of Load of the LM Guide

Table8 Equivalent factor in each direction

Classification	Model No.		If radial and lateral loads are applied simultaneously		If reverse-radial and lateral loads are applied simultaneously	
			Equivalent in radial direction		Equivalent in reverse radial direction	
	Type	Size	X	Y	X	Y
4-way Equal Load	SHS		1.000	1.000	1.000	1.000
	SHW		1.000	1.000	1.000	1.000
	SRS	12,15,25	1.000	1.000	1.000	1.000
	SCR		1.000	1.000	1.000	1.000
	EPF		1.000	1.000	1.000	1.000
	HSR		1.000	1.000	1.000	1.000
	NRS	75,85,100	1.000	1.000	1.000	1.000
	HRW	17,21,27,35,50,60	1.000	1.000	1.000	1.000
	RSR	2,3	1.000	1.000	1.000	1.000
	CSR		1.000	1.000	1.000	1.000
	MX		1.000	1.000	1.000	1.000
	JR		1.000	1.000	1.000	1.000
	HCR		1.000	1.000	1.000	1.000
	HMG		1.000	1.000	1.000	1.000
	HSR-M1		1.000	1.000	1.000	1.000
	RSR-M1	9	1.000	1.000	1.000	1.000
	HSR-M2		1.000	1.000	1.000	1.000
	HSR-M1VV		1.000	1.000	1.000	1.000
	SRG		1.000	1.000	1.000	1.000
	SRN		1.000	1.000	1.000	1.000
	SRW		1.000	1.000	1.000	1.000
Radial	SSR		—	—	1.000	1.155
	SVR		—	—	1.000	1.678
	SR	15,20,25,30,35,45,55,70	—	—	1.000	1.155
	SR	85,100,120,150	—	—	1.000	2.000
	NR-X		—	—	1.000	1.678
	NR	75,85,100	—	—	1.000	2.000
	HRW	12,14	—	—	1.000	2.000
	NSR		—	—	1.000	1.155
	SR-M1		—	—	1.000	1.155
	SR-MS		—	—	1.000	1.155
Other	SVS		1.000	0.935	1.000	1.020
	NRS-X		1.000	0.935	1.000	1.020
	SRS	5,7,9,20	1.000	0.839	1.000	0.839
	RSR	14	1.000	0.830	1.000	0.990
	HR		1.000	0.500	1.000	0.500
	GSR		1.000	1.280	1.000	1.000
	GSR-R		1.000	1.280	1.000	1.280
	RSR-M1	12,15	1.000	0.830	1.000	0.990

Note) If the radial type LM Guide receives radial and lateral loads simultaneously, study the safety static factor and the rated load in the radial-load and lateral-load directions.
For types with no size indication in the table, the same factor is applied to all sizes.
Models HR, GSR and GSR-R cannot be used in single-axis applications.

Calculating the Static Safety Factor

To calculate a load applied to the LM Guide, the average load required for calculating the service life and the maximum load needed for calculating the static safety factor must be obtained first. In a system subject to frequent starts and stops, placed under cutting forces or under a large moment caused by an overhang load, an excessively large load may apply to the LM Guide. When selecting a model number, make sure that the desired model is capable of receiving the required maximum load (whether stationary or in motion). Table9 shows reference values for the static safety factor.

Table9 Reference Values for the Static Safety Factor (f_S)

Machine using the LM Guide	Load conditions	Lower limit of f_S
General industrial machinery	Without vibration or impact	1.0 to 3.5
	With vibration or impact	2.0 to 5.0
Machine tool	Without vibration or impact	1.0 to 4.0
	With vibration or impact	2.5 to 7.0

When the radial load is large	$\frac{f_H \cdot f_T \cdot f_C \cdot C_0}{P_R} \geqq f_S$
When the reverse radial load is large	$\frac{f_H \cdot f_T \cdot f_C \cdot C_{0L}}{P_L} \geqq f_S$
When the lateral loads are large	$\frac{f_H \cdot f_T \cdot f_C \cdot C_{0T}}{P_T} \geqq f_S$

f_S : Static safety factor
C_0 : Basic static load rating (radial direction) (N)
C_{0L} : Basic static load rating (reverse-radial direction) (N)
C_{0T} : Basic static load rating (lateral direction) (N)
P_R : Calculated load (radial direction) (N)
P_L : Calculated load (reverse-radial direction) (N)
P_T : Calculated load (lateral direction) (N)
f_H : Hardness factor (see Fig.8 on A1-66)
f_T : Temperature factor (see Fig.9 on A1-66)
f_C : Contact factor (see Table10 on A1-66)

Calculating the Average Load

In cases where the load applied to each LM block fluctuates under different conditions, such as an industrial robot holding a work with its arm as it advances and receding with its arm empty, and a machine tool handling various workpieces, it is necessary to calculate the service life of the LM Block while taking into account such fluctuating loading conditions.
The average load (P_m) is the load under which the service life of the LM Guide is equivalent to that under varying loads applied to the LM blocks.

$$P_m = \sqrt[i]{\frac{1}{L} \cdot \sum_{n=1}^{n} (P_n^{\,i} \cdot L_n)}$$

P_m	: Average Load	(N)
P_n	: Varying load	(N)
L	: Total travel distance	(mm)
L_n	: Distance traveled under load P_n	(mm)
i	: Constant determined by rolling element	

Note) The above equation or the equation (1) below applies when the rolling elements are balls.

(1) When the load fluctuates stepwise

LM Guide Using Balls (i=3)

$$P_m = \sqrt[3]{\frac{1}{L} (P_1^{\,3} \cdot L_1 + P_2^{\,3} \cdot L_2 \cdots\cdots + P_n^{\,3} \cdot L_n)} \quad \cdots\cdots\cdots\cdots (1)$$

P_m	: Average load	(N)
P_n	: Varying load	(N)
L	: Total travel distance	(mm)
L_n	: Distance traveled under P_n	(mm)

LM Guide Using Rollers ($i = \frac{10}{3}$)

$$P_m = \sqrt[\frac{10}{3}]{\frac{1}{L} (P_1^{\frac{10}{3}} \cdot L_1 + P_2^{\frac{10}{3}} \cdot L_2 \cdots\cdots + P_n^{\frac{10}{3}} \cdot L_n)} \quad \cdots\cdots\cdots\cdots (2)$$

P_m	: Average Load	(N)
P_n	: Varying load	(N)
L	: Total travel distance	(mm)
L_n	: Distance traveled under P_n	(mm)

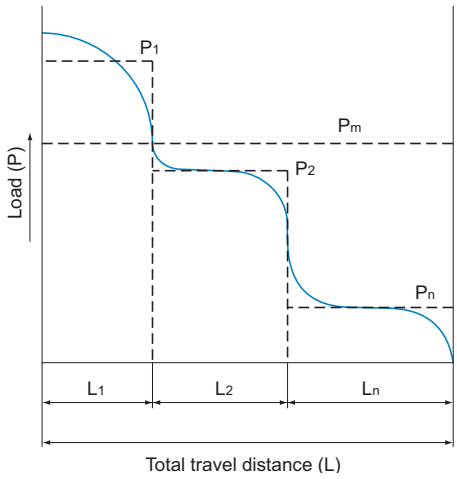

(2) When the load fluctuates monotonically

$$P_m \fallingdotseq \frac{1}{3}(P_{min} + 2 \cdot P_{max}) \quad \cdots\cdots\cdots\cdots (3)$$

P_{min} : Minimum load (N)
P_{max} : Maximum load (N)

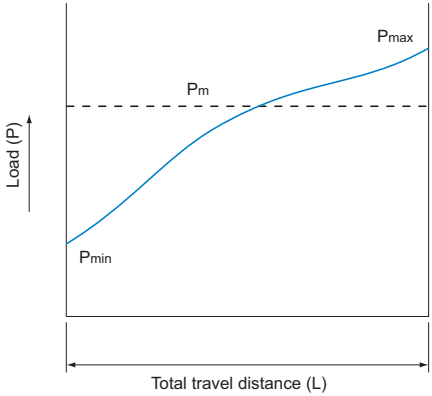

(3) When the load fluctuates sinusoidally

(a) $P_m \fallingdotseq 0.65P_{max} \cdots\cdots\cdots\cdots (4)$

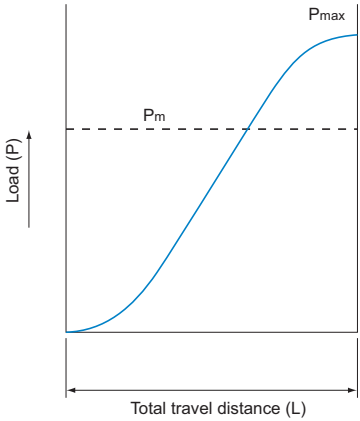

(b) $P_m \fallingdotseq 0.75P_{max} \cdots\cdots\cdots\cdots (5)$

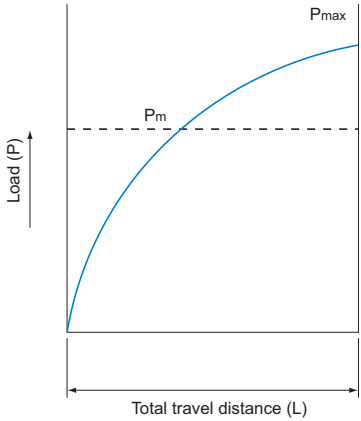

Calculating the Nominal Life

The service life of an LM Guide is subject to variations even under the same operational conditions. Therefore, it is necessary to use the nominal life defined below as a reference value for obtaining the service life of the LM Guide. The nominal life means the total travel distance that 90% of a group of units of the same LM Guide model can achieve without flaking (scale-like pieces on the metal surface) after individually running under the same conditions.

Nominal Life Equation for an LM Guide Using Balls

$$L = \left(\frac{f_H \cdot f_T \cdot f_C}{f_W} \cdot \frac{C}{P_C} \right)^3 \times 50$$

L : Nominal life (km)
C : Basic dynamic load rating (N)
P_C : Calculated load (N)
f_H : Hardness factor (see Fig.8 on A1-66)
f_T : Temperature factor (see Fig.9 on A1-66)
f_C : Contact factor (see Table10 on A1-66)
f_W : Load factor (see Table11 on A1-67)

Nominal Life Equation for the Oil-Free LM Guide

$$L = \left(\frac{F_0}{f_W \cdot P_C} \right)^{1.57} \times 50$$

L : Nominal life (km)
F_0 : Permissible load (N)
P_C : Calculated load (N)
f_W : Load factor (see Table11 on A1-67)

Note) The life here means the service of life of the S film based on wear.
Since the service life of the S film may vary according to the environment or the operating conditions, be sure to evaluate and validate the life under the service conditions and operating conditions at the customer.

Nominal Life Equation for an LM Guide Using Rollers

$$L = \left(\frac{f_H \cdot f_T \cdot f_C}{f_W} \cdot \frac{C}{P_C} \right)^{\frac{10}{3}} \times 100$$

L : Nominal life (km)
C : Basic dynamic load rating (N)
P_C : Calculated load (N)
f_H : Hardness factor (see Fig.8 on A1-66)
f_T : Temperature factor (see Fig.9 on A1-66)
f_C : Contact factor (see Table10 on A1-66)
f_W : Load factor (see Table11 on A1-67)

Once the nominal life (L) has been obtained, the service life time can be obtained using the following equation if the stroke length and the number reciprocations are constant.

$$L_h = \frac{L \times 10^6}{2 \times \ell_s \times n_1 \times 60}$$

L_h : Service life time (h)
ℓ_s : Stroke length (mm)
n_1 : Number of reciprocations per minute (min^{-1})

[f_H: Hardness Factor]

To ensure the achievement of the optimum load capacity of the LM Guide, the raceway hardness must be between 58 and 64 HRC.
If the hardness is lower than this range, the basic dynamic load rating and the basic static load rating decrease. Therefore, it is necessary to multiply each rating by the respective hardness factor (f_H).
Since the LM Guide has sufficient hardness, the f_H value for the LM Guide is normally 1.0 unless otherwise specified.

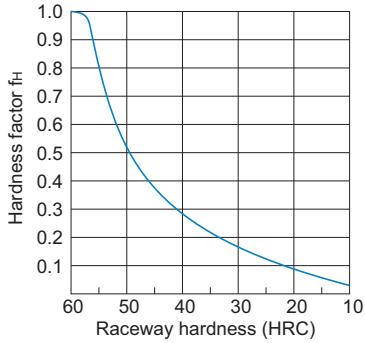

Fig.8 Hardness Factor (f_H)

[f_T:Temperature Factor]

If the temperature of the environment surrounding the operating LM Guide exceeds 100℃, take into account the adverse effect of the high temperature and multiply the basic load ratings by the temperature factor indicated in Fig.9.
In addition, the selected LM Guide must also be of a high temperature type.

Note) LM guides not designed to withstand high temperatures should be used at 80°C or less.Please contact THK if application requirements exceed 80°C.

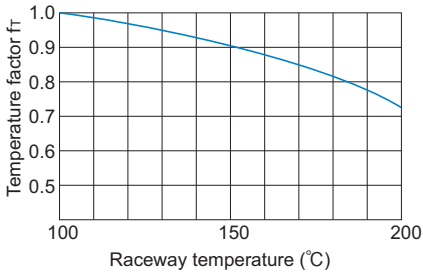

Fig.9 Temperature Factor (f_T)

[f_C: Contact Factor]

When multiple LM blocks are used in close contact with each other, it is difficult to achieve uniform load distribution due to moment loads and mounting-surface accuracy. When using multiple blocks in close contact with each other, multiply the basic load rating (C or C_0) by the corresponding contact factor indicated in Table10.

Note) If uneven load distribution is expected in a large machine, take into account the respective contact factor indicated in Table10.

Table10 Contact Factor (f_C)

Number of blocks used in close contact	Contact factor f_C
2	0.81
3	0.72
4	0.66
5	0.61
6 or more	0.6
Normal use	1

[f_w: Load Factor]

In general, reciprocating machines tend to involve vibrations or impact during operation. It is extremely difficult to accurately determine vibrations generated during high-speed operation and impact during frequent start and stop. Therefore, where the effects of speed and vibration are estimated to be significant, divide the basic dynamic load rating (C) by a load factor selected from Table11, which contains empirically obtained data.

Table11 Load Factor (f_w)

Vibrations/ impact	Speed (V)	f_w
Faint	Very low V≦0.25m/s	1 to 1.2
Weak	low 0.25<V≦1m/s	1.2 to 1.5
Medium	Medium 1<V≦2m/s	1.5 to 2
Strong	High V>2m/s	2 to 3.5

Predicting the Rigidity

Selecting a Radial Clearance (Preload)

Since the radial clearance of an LM Guide greatly affects the running accuracy, load carrying capacity and rigidity of the LM Guide, it is important to select an appropriate clearance according to the application. In general, selecting a negative clearance (i.e., a preload* is applied) while taking into account possible vibrations and impact generated from reciprocating motion favorably affects the service life and the accuracy.
For specific radial clearances, contact THK. We will help you select the optimal clearance according to the conditions.
The clearances of all LM Guide models (except model HR, GSR and GSR-R, which are separate types) are adjusted as specified before shipment, and therefore they do not need further preload adjustment.

*Preload is an internal load applied to the rolling elements (balls, rollers, etc.) of an LM block in advance in order to increase its rigidity.

Table12 Types of Radial Clearance

	Normal Clearance	Clearance C1 (Light Preload)	Clearance C0 (Medium Preload)
Condition	● The loading direction is fixed, impact and vibrations are minimal and 2 rails are installed in parallel. ● Very high precision is not required, and the sliding resistance must be as low as possible.	● An overhang load or moment load is applied. ● LM Guide is used in a single-rail configuration. ● Light load and high accuracy are required.	● High rigidity is required and vibrations and impact are applied. ● Heavy-cutting machine tool
Examples of applications	• Beam-welding machine • Book-binding machin • Automatic packaging machine • XY axes of general industrial machinery • Automatic sash-manufacturing machine • Welding machine • Flame cutting machine • Tool changer • Various kinds of material feeder	• Grinding machine table feed axis • Automatic coating machine • Industrial robot • various kinds of material high speed feeder • NC drilling machine • Vertical axis of general industrial machinery • Printed circuit board drilling machine • Electric discharge machine • Measuring instrument • Precision XY table	• Machining center • NC lathe • Grinding stone feed axis of grinding machine • Milling machine • Vertical/horizontal boring machine • Tool rest guide • Vertical axis of machine tool

Service Life with a Preload Considered

When using an LM Guide under a medium preload (clearance C0), it is necessary to calculate the service life while taking into account the magnitude of the preload.
To identify the appropriate preload for any selected LM Guide model, contact THK.

Rigidity

When a load is applied to an LM Guide, the bearings and LM block will elastically deform within the allowable load range. The ratio of displacement to applied load is referred to as “rigidity.” The radial internal clearance (preload) for the LM Guide can be specified in order to reduce displacement.
By using balls larger than the width of the race, they will naturally deform elastically as they roll, allowing the load to be maintained for longer while limiting displacement in the LM Guide.
The effect of the preload can be up to 2.8 times greater than the size of the preload itself. If that level is exceeded, the preload is released and the effect of the preload is lost.
When a preloaded LM Guide takes an external load, the displacement will be linear. The level of displacement will be approximately half that of an LM Guide with no preload.
The preload, in addition to reducing displacement, helps prevent premature failure due to vibration and impact/shock.

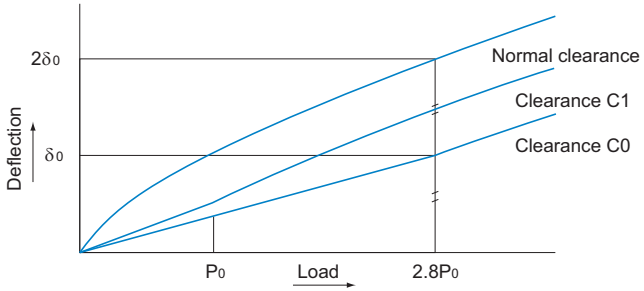

P_0 : Magnitude of clearance C0

Fig.10 Rigidity Data

$$K=\frac{P}{\delta}$$

K	: Rigidity value	(N/μm)
δ	: Deflection	(μm)
P	: Calculated load	(N)

Radial Clearance Standard for Each Model

Radial clearance

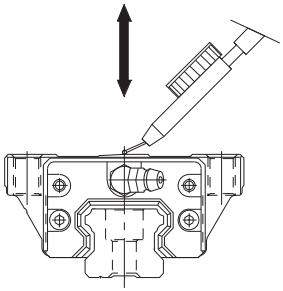

[Radial clearances for models SHS and SCR]

Unit: μm

Indication symbol	Normal	Light preload	Medium preload
Model No.	No Symbol	C1	C0
15	–5 to 0	–12 to –5	—
20	–6 to 0	–12 to –6	–18 to –12
25	–8 to 0	–14 to –8	–20 to –14
30	–9 to 0	–17 to –9	–27 to –17
35	–11 to 0	–19 to –11	–29 to –19
45	–12 to 0	–22 to –12	–32 to –22
55	–15 to 0	–28 to –16	–38 to –28
65	–18 to 0	–34 to –22	–45 to –34

[Radial clearance for model SSR]

Unit: μm

Indication symbol	Normal	Light preload
Model No.	No Symbol	C1
15	–4 to +2	–10 to –4
20	–5 to +2	–12 to –5
25	–6 to +3	–15 to –6
30	–7 to +4	–18 to –7
35	–8 to +4	–20 to –8

[Radial clearance for models SVR/SVS, NR/NRS-X and NR/NRS]

Unit: μm

Indication symbol	Normal	Light preload	Medium preload
Model No.	No Symbol	C1	C0
25	–3 to +2	–6 to –3	–9 to –6
30	–4 to +2	–8 to –4	–12 to –8
35	–4 to +2	–8 to –4	–12 to –8
45	–5 to +3	–10 to –5	–15 to –10
55	–6 to +3	–11 to –6	–16 to –11
65	–8 to +3	–14 to –8	–20 to –14
75	–10 to +4	–17 to –10	–24 to –17
85	–13 to +4	–20 to –13	–27 to –20
100	–14 to +4	–24 to –14	–34 to –24

[Radial clearance for model SHW]

Unit: μm

Indication symbol	Normal	Light preload	Medium preload
Model No.	No Symbol	C1	C0
12	–1.5 to 0	–4 to –1	—
14	–2 to 0	–5 to –1	—
17	–3 to 0	–7 to –3	—
21	–4 to +2	–8 to –4	—
27	–5 to +2	–11 to –5	—
35	–8 to +4	–18 to –8	–28 to –18
50	–10 to +5	–24 to –10	–38 to –24

[Radial clearance for model SRS]

Unit: μm

Indication symbol	Normal	Light preload
Model No.	No Symbol	C1
5	0 to +1.5	–1 to 0
7	–2 to +2	–3 to 0
9	–2 to +2	–4 to 0
12	–3 to +3	–6 to 0
15	–5 to +5	–10 to 0
20	–5 to +5	–10 to 0
25	–7 to +7	–14 to 0

[Radial clearance for models HSR, CSR, HSR-M1 and HSR-M1VV]

Unit: μm

Indication symbol	Normal	Light preload	Medium preload
Model No.	No Symbol	C1	C0
8	–1 to +1	–4 to –1	—
10	–2 to +2	–5 to –1	—
12	–3 to +3	–6 to –2	—
15	–4 to +2	–12 to –4	—
20	–5 to +2	–14 to –5	–23 to –14
25	–6 to +3	–16 to –6	–26 to –16
30	–7 to +4	–19 to –7	–31 to –19
35	–8 to +4	–22 to –8	–35 to –22

Unit: μm

Indication symbol	Normal	Light preload	Medium preload
Model No.	No Symbol	C1	C0
45	–10 to +5	–25 to –10	–40 to –25
55	–12 to +5	–29 to –12	–46 to –29
65	–14 to +7	–32 to –14	–50 to –32
85	–16 to +8	–36 to –16	–56 to –36
100	–19 to +9	–42 to –19	–65 to –42
120	–21 to +10	–47 to –21	–73 to –47
150	–23 to +11	–51 to –23	–79 to –51

[Radial clearances for models SR and SR-M1]

Unit: μm

Indication symbol	Normal	Light preload	Medium preload
Model No.	No Symbol	C1	C0
15	–4 to +2	–10 to –4	—
20	–5 to +2	–12 to –5	–17 to –12
25	–6 to +3	–15 to –6	–21 to –15
30	–7 to +4	–18 to –7	–26 to –18
35	–8 to +4	–20 to –8	–31 to –20
45	–10 to +5	–24 to –10	–36 to –24
55	–12 to +5	–28 to –12	–45 to –28
70	–14 to +7	–32 to –14	–50 to –32
85	–20 to +9	–46 to –20	–70 to –46
100	–22 to +10	–52 to –22	–78 to –52
120	–25 to +12	–57 to –25	–87 to –57
150	–29 to +14	–69 to –29	–104 to –69

[Radial clearance for model HRW]

Unit: μm

Indication symbol	Normal	Light preload	Medium preload
Model No.	No Symbol	C1	C0
12	–1.5 to +1.5	–4 to –1	—
14	–2 to +2	–5 to –1	—
17	–3 to +2	–7 to –3	—
21	–4 to +2	–8 to –4	—
27	–5 to +2	–11 to –5	—
35	–8 to +4	–18 to –8	–28 to –18
50	–10 to +5	–24 to –10	–38 to –24
60	–12 to +5	–27 to –12	–42 to –27

[Radial clearance for models RSR, RSR-W and RSR-M1]

Unit: μm

Indication symbol	Normal	Light preload
Model No.	No Symbol	C1
2	0 to +4	—
3	0 to +1	–0.5 to 0
9	–2 to +2	–4 to 0
12	–3 to +3	–6 to 0
14	–5 to +5	–10 to 0
15	–5 to +5	–10 to 0
20	–7 to +7	–14 to 0

[Radial clearance for model MX]

Unit: μm

Indication symbol	Normal	Light preload
Model No.	No Symbol	C1
5	0 to +1.5	–1 to 0
7	–2 to +2	–3 to 0

[Radial clearance for model JR]

Unit: μm

Indication symbol	Normal
Model No.	No Symbol
25	0 to +30
35	0 to +30
45	0 to +50
55	0 to +50

[Radial clearances for models HCR and HMG]

Unit: μm

Indication symbol	Normal	Light preload
Model No.	No Symbol	C1
12	–3 to +3	–6 to –2
15	–4 to +2	–12 to –4
25	–6 to +3	–16 to –6
35	–8 to +4	–22 to –8
45	–10 to +5	–25 to –10
65	–14 to +7	–32 to –14

[Radial clearance for model NSR-TBC]

Unit: μm

Indication symbol	Normal	Light preload	Medium preload
Model No.	No Symbol	C1	C0
20	–5 to +5	–15 to –5	–25 to –15
25	–5 to +5	–15 to –5	–25 to –15
30	–5 to +5	–15 to –5	–25 to –15
40	–8 to +8	–22 to –8	–36 to –22
50	–8 to +8	–22 to –8	–36 to –22
70	–10 to +10	–26 to –10	–42 to –26

[Radial clearance for model HSR-M2]

Unit: μm

Indication symbol	Normal	Light preload
Model No.	No Symbol	C1
15	–4 to +2	–12 to –4
20	–5 to +2	–14 to –5
25	–6 to +3	–16 to –6

[Radial clearances for models SRG and SRN]

Unit: μm

Indication symbol	Normal	Light preload	Medium preload
Model No.	No Symbol	C1	C0
15	–0.5 to 0	–1 to –0.5	–2 to –1
20	–0.8 to 0	–2 to –0.8	–3 to –2
25	–2 to –1	–3 to –2	–4 to –3
30	–2 to –1	–3 to –2	–4 to –3
35	–2 to –1	–3 to –2	–5 to –3
45	–2 to –1	–3 to –2	–5 to –3
55	–2 to –1	–4 to –2	–6 to –4
65	–3 to –1	–5 to –3	–8 to –5
85	–3 to –1	–7 to –3	–12 to –7
100	–3 to –1	–8 to –3	–13 to –8

[Radial clearance for model SRW]

Unit: μm

Indication symbol	Normal	Light preload	Medium preload
Model No.	No Symbol	C1	C0
70	–2 to –1	–3 to –2	–5 to –3
85	–2 to –1	–4 to –2	–6 to –4
100	–3 to –1	–5 to –3	–8 to –5
130	–3 to –1	–7 to –3	–12 to –7
150	–3 to –1	–8 to –3	–13 to –8

[Radial clearance for model EPF]

Unit: μm

Indication symbol	Normal
Model No.	No Symbol
7M	0 or less
9M	
12M	
15M	

[Radial Clearance for the Oil-Free LM Guide Model SR-MS]

Unit: μm

Indication symbol	Clearance CS
Model No.	
15	–2 to +1
20	–2 to +1

Determining the Accuracy

Accuracy Standards

Accuracy of the LM Guide is specified in terms of running parallelism, dimensional tolerance for height and width, and height and width difference between a pair when 2 or more LM blocks are used on one rail or when 2 or more rails are mounted on the same plane.
For details, see “Accuracy Standard for Each Model” on A1-75 to A1-85.

[Running of Parallelism]

It refers to the tolerance for parallelism between the LM block and the LM rail reference surface when the LM block travels the whole length of the LM rail with the LM rail secured on the reference reference surface using bolts.

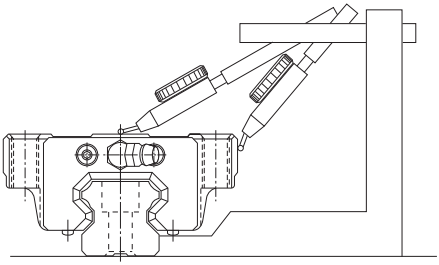

Fig.11 Running of Parallelism

[Difference in Height M]

Indicates a difference between the minimum and maximum values of height (M) of each of the LM blocks used on the same plane in combination.

[Difference in Width W_2]

Indicates a difference between the minimum and maximum values of the width (W_2) between each of the LM blocks, mounted on one LM rail in combination, and the LM rail.

Note 1) When two or more rails are used on the same plane in parallel, only the width (W_2) variation and dimensional tolerance of the master rail apply. Master LM rails will have a serial number ending with “KB” printed on them. However, this is not the case for standard grade products.

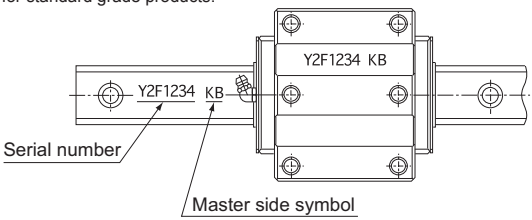

Fig.12 Master LM Rail (E.g. Model HSR-A)

Note 2) Accuracy measurements each represent the average value of the central point or the central area of the LM block.
Note 3) If it is mounted on a less rigid base such as an aluminum base, the curve of the rail will affect the accuracy of the machine. Therefore, it is necessary to define straightness of the rail in advance.

Guidelines for Accuracy Grades by Machine Type

Table13 shows guidelines for selecting an accuracy grade of the LM Guide according to the machine type.

Table13 Guideline for Accuracy Grades by Machine Type

Type of machine		Accuracy grades				
		Normal	H	P	SP	UP
Machine tool	Machining center			●	●	
	Lathe			●	●	
	Milling machine			●	●	
	Boring machine			●	●	
	Jig borer				●	●
	Grinding machine				●	●
	Electric discharge machine			●	●	●
	Punching press		●	●		
	Laser beam machine		●	●	●	
	Woodworking machine	●	●	●		
	NC drilling machine		●	●		
	Tapping center		●	●		
	Palette changer	●				
	ATC	●				
	Wire cutting machine			●	●	
	Dressing machine				●	●
Industrial robot	Cartesian coordinate	●	●	●		
	Cylindrical coordinate	●	●			
Semiconductor manufacturing equipment	Wire bonding machine			●	●	
	Prober				●	●
	Electronic component inserter		●	●		
	Printed circuit board drilling machine		●	●	●	
Other equipment	Injection molding machine	●	●			
	3D measuring instrument				●	●
	Office equipment	●	●			
	Conveyance system	●	●			
	XY table		●	●	●	
	Coating machine	●	●			
	Welding machine	●	●			
	Medical equipment	●	●			
	Digitizer		●	●	●	
	Inspection equipment			●	●	●

Normal : Normal grade
H : High accuracy grade
P : Precision grade
SP : Super precision grade
UP : Ultra precision grade

Accuracy Standard for Each Model

- Accuracies of models SHS, SSR, SVR/SVS, SHW, HSR, SR, NR/NRS-X, NR/NRS, HRW, NSR-TBC, HSR-M1, HSR-M1VV, SR-M1, HSR-M2, SRG and SRN are categorized into Normal grade (no symbol), High accuracy grade (H), Precision grade (P), Super precision grade (SP) and Ultra precision grade (UP) by model numbers, as indicated in Table15 on A1-76.

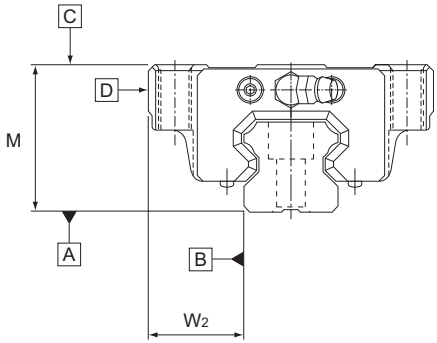

Fig.13

Table14 LM Rail Length and Running Parallelism by Accuracy Standard

Unit: μm

LM rail length (mm)		Running Parallelism Values				
Above	Or less	Normal grade	High-accuracy grade	Precision grade	Super precision grade	Ultra precision grade
—	50	5	3	2	1.5	1
50	80	5	3	2	1.5	1
80	125	5	3	2	1.5	1
125	200	5	3.5	2	1.5	1
200	250	6	4	2.5	1.5	1
250	315	7	4.5	3	1.5	1
315	400	8	5	3.5	2	1.5
400	500	9	6	4.5	2.5	1.5
500	630	11	7	5	3	2
630	800	12	8.5	6	3.5	2
800	1000	13	9	6.5	4	2.5
1000	1250	15	11	7.5	4.5	3
1250	1600	16	12	8	5	4
1600	2000	18	13	8.5	5.5	4.5
2000	2500	20	14	9.5	6	5
2500	3090	21	16	11	6.5	5.5

Table15 Accuracy Standards for Models SHS, SSR, SVR/SVS, SHW, HSR, SR, NR/NRS-X, NR/NRS, HRW, NSR-TBC, HSR-M1, HSR-M1VV, SR-M1, HSR-M2, SRG, and SRN.

Unit: mm

Model No.	Accuracy standards	Normal grade	High-accuracy grade	Precision grade	Super precision grade	Ultra precision grade
	Item	No Symbol	H	P	SP	UP
8 10 12 14	Dimensional tolerance in height M	±0.07	±0.03	±0.015	±0.007	—
	Difference in height M	0.015	0.007	0.005	0.003	—
	Dimensional tolerance in width W_2	±0.04	±0.02	±0.01	±0.007	—
	Difference in width W_2	0.02	0.01	0.006	0.004	—
	Running parallelism of surface C against surface A	ΔC (as shown in Table14 A1-75)				
	Running parallelism of surface D against surface B	ΔD (as shown in Table14 A1-75)				
15 17 20 21	Dimensional tolerance in height M	±0.07	±0.03	0 –0.03	0 –0.015	0 –0.008
	Difference in height M	0.02	0.01	0.006	0.004	0.003
	Dimensional tolerance in width W_2	±0.06	±0.03	0 –0.02	0 –0.015	0 –0.008
	Difference in width W_2	0.02	0.01	0.006	0.004	0.003
	Running parallelism of surface C against surface A	ΔC (as shown in Table14 A1-75)				
	Running parallelism of surface D against surface B	ΔD (as shown in Table14 A1-75)				
25 27 30 35	Dimensional tolerance in height M	±0.08	±0.04	0 –0.04	0 –0.02	0 –0.01
	Difference in height M	0.02	0.015	0.007	0.005	0.003
	Dimensional tolerance in width W_2	±0.07	±0.03	0 –0.03	0 –0.015	0 –0.01
	Difference in width W_2	0.025	0.015	0.007	0.005	0.003
	Running parallelism of surface C against surface A	ΔC (as shown in Table14 A1-75)				
	Running parallelism of surface D against surface B	ΔD (as shown in Table14 A1-75)				
40 45 50 55 60	Dimensional tolerance in height M	±0.08	±0.04	0 –0.05	0 –0.03	0 –0.015
	Difference in height M	0.025	0.015	0.007	0.005	0.003
	Dimensional tolerance in width W_2	±0.07	±0.04	0 –0.04	0 –0.025	0 –0.015
	Difference in width W_2	0.03	0.015	0.007	0.005	0.003
	Running parallelism of surface C against surface A	ΔC (as shown in Table14 A1-75)				
	Running parallelism of surface D against surface B	ΔD (as shown in Table14 A1-75)				
65 70 75 85 100 120 150	Dimensional tolerance in height M	±0.08	±0.04	0 –0.05	0 –0.04	0 –0.03
	Difference in height M	0.03	0.02	0.01	0.007	0.005
	Dimensional tolerance in width W_2	±0.08	±0.04	0 –0.05	0 –0.04	0 –0.03
	Difference in width W_2	0.03	0.02	0.01	0.007	0.005
	Running parallelism of surface C against surface A	ΔC (as shown in Table14 A1-75)				
	Running parallelism of surface D against surface B	ΔD (as shown in Table14 A1-75)				

Note1) Models SRG35 to 65 are available in High accuracy grade or above. Other models are only available in Precision grade or above (Ct7, Ct5 and Normal grade are not available).
Note2) For model SRN, only precision or higher grades apply.

● Accuracies of model HMG are defined by model number as indicated in Table16.

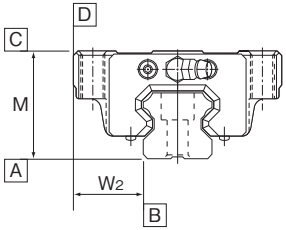

Fig.14

Table16 Model HMG Accuracy Standard

Unit: mm

Model No.	Accuracy Standards Item	Normal grade No symbol
15	Dimensional tolerance in height M	±0.1
	Difference in height M	0.02
	Dimensional tolerance in width W_2	±0.1
	Difference in width W_2	0.02
	Running parallelism of surface C against surface A	ΔC (as shown in Table17)
	Running parallelism of surface D against surface B	ΔD (as shown in Table17)
25 35	Dimensional tolerance in height M	±0.1
	Difference in height M	0.02
	Dimensional tolerance in width W_2	±0.1
	Difference in width W_2	0.03
	Running parallelism of surface C against surface A	ΔC (as shown in Table17)
	Running parallelism of surface D against surface B	ΔD (as shown in Table17)
45 65	Dimensional tolerance in height M	±0.1
	Difference in height M	0.03
	Dimensional tolerance in width W_2	±0.1
	Difference in width W_2	0.03
	Running parallelism of surface C against surface A	ΔC (as shown in Table17)
	Running parallelism of surface D against surface B	ΔD (as shown in Table17)

Table17 LM Rail Length and Running Parallelism by Accuracy Standard

Unit: μm

LM rail length (mm)		Running Parallelism Values
Above	Or less	Normal grade
—	125	30
125	200	37
200	250	40
250	315	44
315	400	49
400	500	53
500	630	58
630	800	64
800	1000	70
1000	1250	77
1250	1600	84
1600	2000	92

- Accuracies of model HCR are categorized into normal and high accuracy grades by model number as indicated in Table18.

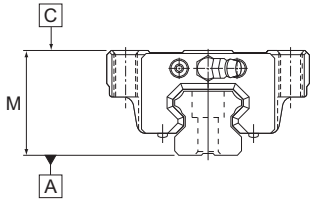

Fig.15

Table18 Accuracy Standard for Model HCR

Unit: mm

Model No.	Accuracy standards	Normal grade	High-accuracy grade
	Item	No Symbol	H
12 15 25 35	Dimensional tolerance in height M	±0.2	±0.2
	Difference in height M	0.05	0.03
	Running parallelism of surface C against surface A	ΔC (as shown in Table19)	
45 65	Dimensional tolerance in height M	±0.2	±0.2
	Difference in height M	0.06	0.04
	Running parallelism of surface C against surface A	ΔC (as shown in Table19)	

Table19 LM Rail Length and Running Parallelism by Accuracy Standard

Unit: μm

LM rail length (mm)		Running Parallelism Values	
Above	Or less	Normal grade	High-accuracy grade
—	125	30	15
125	200	37	18
200	250	40	20
250	315	44	22
315	400	49	24
400	500	53	26
500	630	58	29
630	800	64	32
800	1000	70	35
1000	1250	77	38
1250	1600	84	42
1600	2000	92	46

- Accuracies of model JR are defined by model number as indicated in Table20.

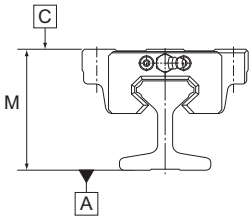

Fig.16

Table20 Accuracy Standard for Model JR

Unit: mm

Model No.	Accuracy standards	Normal grade
	Item	No Symbol
25 35	Difference in height M	0.05
	Running parallelism of surface C against surface A	ΔC (as shown in Table21)
45 55	Difference in height M	0.06
	Running parallelism of surface C against surface A	ΔC (as shown in Table21)

Table21 LM Rail Length and Running Parallelism by Accuracy Standard

Unit: μm

LM rail length (mm)		Running Parallelism Values
Above	Or less	Normal grade
—	50	5
50	80	5
80	125	5
125	200	6
200	250	8
250	315	9
315	400	11
400	500	13
500	630	15
630	800	17
800	1000	19
1000	1250	21
1250	1600	23
1600	2000	26
2000	2500	28
2500	3150	30
3150	4000	33

- Accuracies of models SCR and CSR are categorized into precision, super precision and ultra precision grades by model number as indicated in Table22.

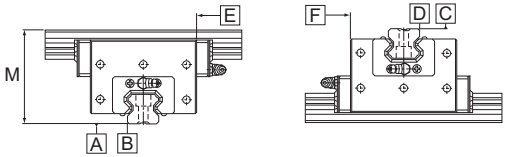

Fig.17

Table22 Accuracy Standard for Models SCR and CSR

Unit: mm

Model No.	Accuracy standards	Precision grade	Super precision grade	Ultra precision grade
	Item	P	SP	UP
15 20	Difference in height M	0.01	0.007	0.005
	Perpendicularity of surface D against surface B	0.005	0.004	0.003
	Running parallelism of surface E against surface B	ΔC (as shown in Table23)		
	Running parallelism of surface F against surface D	ΔD (as shown in Table23)		
25	Difference in height M	0.01	0.007	0.005
	Perpendicularity of surface D against surface B	0.008	0.006	0.004
	Running parallelism of surface E against surface B	ΔC (as shown in Table23)		
	Running parallelism of surface F against surface D	ΔD (as shown in Table23)		
30 35	Difference in height M	0.01	0.007	0.005
	Perpendicularity of surface D against surface B	0.01	0.007	0.005
	Running parallelism of surface E against surface B	ΔC (as shown in Table23)		
	Running parallelism of surface F against surface D	ΔD (as shown in Table23)		
45	Difference in height M	0.012	0.008	0.006
	Perpendicularity of surface D against surface B	0.012	0.008	0.006
	Running parallelism of surface E against surface B	ΔC (as shown in Table23)		
	Running parallelism of surface F against surface D	ΔD (as shown in Table23)		
65	Difference in height M	0.018	0.012	0.009
	Perpendicularity of surface D against surface B	0.018	0.012	0.009
	Running parallelism of surface E against surface B	ΔC (as shown in Table23)		
	Running parallelism of surface F against surface D	ΔD (as shown in Table23)		

Table23 LM Rail Length and Running Parallelism by Accuracy Standard

Unit: μm

LM rail length (mm)		Running Parallelism Values		
Above	Or less	Precision grade	Super precision grade	Ultra precision grade
—	50	2	1.5	1
50	80	2	1.5	1
80	125	2	1.5	1
125	200	2	1.5	1
200	250	2.5	1.5	1
250	315	3	1.5	1
315	400	3.5	2	1.5
400	500	4.5	2.5	1.5
500	630	5	3	2
630	800	6	3.5	2
800	1000	6.5	4	2.5
1000	1250	7.5	4.5	3
1250	1600	8	5	4
1600	2000	8.5	5.5	4.5
2000	2500	9.5	6	5
2500	3090	11	6.5	5.5

- Accuracies of model HR are categorized into normal, high accuracy, precision, super precision and ultra precision grades as indicated in Table24.

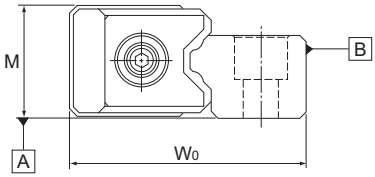

Fig.18

Table24 Accuracy Standard for Model HR

Unit: mm

Accuracy standards	Normal grade	High-accuracy grade	Precision grade	Super precision grade	Ultra precision grade
Item	No Symbol	H	P	SP	UP
Dimensional tolerance in height M	±0.1	±0.05	±0.025	±0.015	±0.01
Difference in height M Note 1)	0.03	0.02	0.01	0.005	0.003
Dimensional tolerance for total width W_0	±0.1		±0.05		
Difference in total width W_0 Note 2)	0.03	0.015	0.01	0.005	0.003
Parallelism of the raceway against surfaces A and B	ΔC (as shown in Table25)				

Note 1) Difference in height M applies to a set of LM Guides used on the same plane.
Note 2) Difference in total width W_0 applies to LM blocks used in combination on one LM rail.
Note 3) In a set of LM Guides, dimensional tolerance and difference in total width W_0 for precision and higher grades apply only to the master rail. The Master LM Guide will have a serial number ending with "KB" printed on it.

Table25 LM Rail Length and Running Parallelism by Accuracy Standard

Unit: μm

LM rail length (mm)		Running Parallelism Values				
Above	Or less	Normal grade	High-accuracy grade	Precision grade	Super precision grade	Ultra precision grade
—	50	5	3	2	1.5	1
50	80	5	3	2	1.5	1
80	125	5	3	2	1.5	1
125	200	5	3.5	2	1.5	1
200	250	6	4	2.5	1.5	1
250	315	7	4.5	3	1.5	1
315	400	8	5	3.5	2	1.5
400	500	9	6	4.5	2.5	1.5
500	630	11	7	5	3	2
630	800	12	8.5	6	3.5	2
800	1000	13	9	6.5	4	2.5
1000	1250	15	11	7.5	4.5	3
1250	1600	16	12	8	5	4
1600	2000	18	13	8.5	5.5	4.5
2000	2500	20	14	9.5	6	5
2500	3000	21	16	11	6.5	5.5

- Accuracies of model GSR are categorized into normal, high accuracy and precision grades by model number as indicated in Table26.

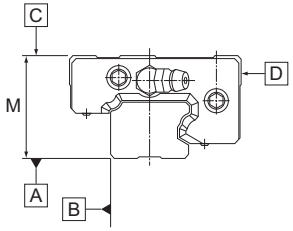

Fig.19

Table26 Accuracy Standard for Model GSR

Unit: mm

Model No.	Accuracy standards	Normal grade	High-accuracy grade	Precision grade
	Item	No Symbol	H	P
15 20	Dimensional tolerance in height M	±0.02		
	Running parallelism of surface C against surface A	ΔC (as shown in Table27)		
	Running parallelism of surface D against surface B	ΔD (as shown in Table27)		
25 30 35	Dimensional tolerance in height M	±0.03		
	Running parallelism of surface C against surface A	ΔC (as shown in Table27)		
	Running parallelism of surface D against surface B	ΔD (as shown in Table27)		

Table27 LM Rail Length and Running Parallelism by Accuracy Standard

Unit: μm

LM rail length (mm)		Running Parallelism Values		
Above	Or less	Normal grade	High-accuracy grade	Precision grade
—	50	5	3	2
50	80	5	3	2
80	125	5	3	2
125	200	5	3.5	2
200	250	6	4	2.5
250	315	7	4.5	3
315	400	8	5	3.5
400	500	9	6	4.5
500	630	11	7	5
630	800	12	8.5	6
800	1000	13	9	6.5
1000	1250	15	11	7.5
1250	1600	16	12	8
1600	2000	18	13	8.5
2000	2500	20	14	9.5
2500	3000	21	16	11

- Accuracies of model GSR-R are categorized into normal and high accuracy grades by model number as indicated in Table28.

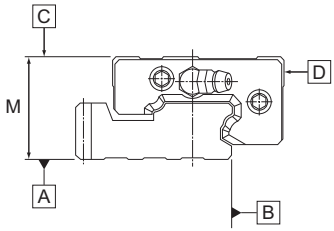

Fig.20

Table28 Accuracy Standard for GSR-R

Unit: mm

Model No.	Accuracy standards	Normal grade	High-accuracy grade
	Item	No Symbol	H
25 30 35	Dimensional tolerance in height M	±0.03	
	Running parallelism of surface C against surface A	ΔC (as shown in Table29)	
	Running parallelism of surface D against surface B	ΔD (as shown in Table29)	

Table29 LM Rail Length and Running Parallelism by Accuracy Standard

Unit: μm

LM rail length (mm)		Running Parallelism Values	
Above	Or less	Normal grade	High-accuracy grade
—	50	5	3
50	80	5	3
80	125	5	3
125	200	5	3.5
200	250	6	4
250	315	7	4.5
315	400	8	5
400	500	9	6
500	630	11	7
630	800	12	8.5
800	1000	13	9
1000	1250	15	11
1250	1600	16	12
1600	2000	18	13

- Accuracies of models SRS, RSR, RSR-M1and RSR-W are categorized into normal, high accuracy and precision grades by model number as indicated in Table30.

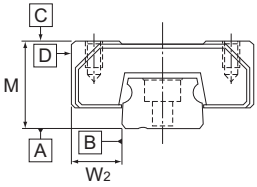

Fig.21

Table30 Accuracy Standards for Models SRS, RSR, RSR-M1 and RSR-W

Unit: mm

Model No.	Accuracy standards	Normal grade	High-accuracy grade	Precision grade
	Item	No Symbol	H	P
3 5	Dimensional tolerance in height M	±0.03	—	±0.015
	Difference in height M	0.015	—	0.005
	Dimensional tolerance in width W_2	±0.03	—	±0.015
	Difference in width W_2	0.015	—	0.005
	Running parallelism of surface C against surface A	ΔC (as shown in Table31)		
	Running parallelism of surface D against surface B	ΔD (as shown in Table31)		
7 9 12 14 15 20 25	Dimensional tolerance in height M	±0.04	±0.02	±0.01
	Difference in height M	0.03	0.015	0.007
	Dimensional tolerance in width W_2	±0.04	±0.025	±0.015
	Difference in width W_2	0.03	0.02	0.01
	Running parallelism of surface C against surface A	ΔC (as shown in Table32)		
	Running parallelism of surface D against surface B	ΔD (as shown in Table32)		

Table31 LM Rail Length and Running Parallelism for Models SRS5, RSR3 and RSR5 by Accuracy Standard

Unit: μm

LM rail length (mm)		Running Parallelism Values	
Above	Or less	Normal grade	Precision grade
—	25	2.5	1.5
25	50	3.5	2
50	100	5.5	3
100	150	7	4
150	200	8.4	5

Table32 LM Rail Length and Running Parallelism for Models SRS7 to 25 and RSR7 to 25 by Accuracy Standard

Unit: μm

LM rail length (mm)		Running Parallelism Values		
Above	Or less	Normal grade	High-accuracy grade	Precision grade
—	40	8	4	1
40	70	10	4	1
70	100	11	4	2
100	130	12	5	2
130	160	13	6	2
160	190	14	7	2
190	220	15	7	3
220	250	16	8	3
250	280	17	8	3
280	310	17	9	3
310	340	18	9	3
340	370	18	10	3
370	400	19	10	3
400	430	20	11	4
430	460	20	12	4
460	520	21	12	4
520	550	22	12	4
550	640	22	13	4
640	670	23	13	4
670	700	23	13	5
700	820	23	14	5
820	850	24	14	5
850	970	24	15	5
970	1030	25	16	5
1030	1150	25	16	6
1150	1330	26	17	6
1330	1420	27	18	6
1420	1510	27	18	7
1510	1830	28	19	7
1830	2000	28	19	8

- Accuracies of model MX are categorized into normal and precision grades by model number as indicated in Table33.

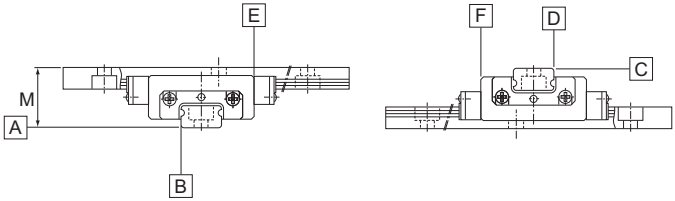

Fig.22

Table33 Accuracy Standard for Model MX

Unit: mm

Model No.	Accuracy standards	Normal grade	Precision grade
	Item	No Symbol	P
5	Difference in height M	0.015	0.005
	Perpendicularity of surface D against surface B	0.003	0.002
	Running parallelism of surface E against surface B	ΔC (as shown in Table34)	
	Running parallelism of surface F against surface D	ΔD (as shown in Table34)	
7	Difference in height M	0.03	0.007
	Perpendicularity of surface D against surface B	0.01	0.005
	Running parallelism of surface E against surface B	ΔC (as shown in Table35)	
	Running parallelism of surface F against surface D	ΔD (as shown in Table35)	

Table35 LM Rail Length and Running Parallelism for Model MX7 by Accuracy Standard

Unit: μm

LM rail length (mm)		Running Parallelism Values	
Above	Or less	Normal grade	Precision grade
—	40	8	1
40	70	10	1
70	100	11	2
100	130	12	2
130	160	13	2
160	190	14	2
190	220	15	3
220	250	16	3
250	280	17	3
280	310	17	3
310	340	18	3
340	370	18	3
370	400	19	3

Table34 LM Rail Length and Running Parallelism for Model MX5 by Accuracy Standard

Unit: μm

LM rail length (mm)		Running Parallelism Values	
Above	Or less	Normal grade	Precision grade
—	25	2.5	1.5
25	50	3.5	2
50	100	5.5	3
100	150	7	4
150	200	8.4	5

- Accuracies of model SRW are categorized into precision, super precision and ultra precision grades by model number as indicated in Table36.

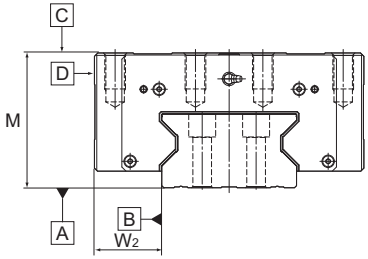

Fig.23

Table36 Accuracy Standard for Model SRW

Unit: mm

Model No.	Accuracy standards	Precision grade	Super precision grade	Ultra precision grade
	Item	P	SP	UP
70 85	Dimensional tolerance in height M	0 –0.05	0 –0.03	0 –0.015
	Difference in height M	0.007	0.005	0.003
	Dimensional tolerance in width W_2	0 –0.04	0 –0.025	0 –0.015
	Difference in width W_2	0.007	0.005	0.003
	Running parallelism of surface C against surface A	ΔC (as shown in Table37)		
	Running parallelism of surface D against surface B	ΔD (as shown in Table37)		
100	Dimensional tolerance in height M	0 –0.05	0 –0.04	0 –0.03
	Difference in height M	0.01	0.007	0.005
	Dimensional tolerance in width W_2	0 –0.05	0 –0.04	0 –0.03
	Difference in width W_2	0.01	0.007	0.005
	Running parallelism of surface C against surface A	ΔC (as shown in Table37)		
	Running parallelism of surface D against surface B	ΔD (as shown in Table37)		
130 150	Dimensional tolerance in height M	0 –0.05	0 –0.04	0 –0.03
	Difference in height M	0.01	0.007	0.005
	Dimensional tolerance in width W_2	0 –0.05	0 –0.04	0 –0.03
	Difference in width W_2	0.01	0.007	0.005
	Running parallelism of surface C against surface A	ΔC (as shown in Table37)		
	Running parallelism of surface D against surface B	ΔD (as shown in Table37)		

Table37 LM Rail Length and Running Parallelism by Accuracy Standard

Unit: μm

LM rail length (mm)		Running Parallelism Values		
Above	Or less	Precision grade	Super precision grade	Ultra precision grade
—	50	2	1.5	1
50	80	2	1.5	1
80	125	2	1.5	1
125	200	2	1.5	1
200	250	2.5	1.5	1
250	315	3	1.5	1
315	400	3.5	2	1.5
400	500	4.5	2.5	1.5
500	630	5	3	2
630	800	6	3.5	2
800	1000	6.5	4	2.5
1000	1250	7.5	4.5	3
1250	1600	8	5	4
1600	2000	8.5	5.5	4.5
2000	2500	9.5	6	5
2500	3090	11	6.5	5.5

- Accuracies of model EPF are categorized into normal, high accuracy and precision grades by model number as indicated in Table38.

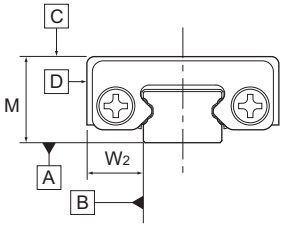

Fig.24

Table38 Accuracy Standard for Model EPF

Unit: mm

Model No.	Accuracy Standards	Normal grade	High-accuracy grade	Precision grade
	Item	No Symbol	H	P
7M 9M 12M 15M	Dimensional tolerance in height M	±0.04	±0.02	±0.01
	Difference in height M	0.03	0.015	0.007
	Dimensional tolerance in width W_2	±0.04	±0.025	±0.015
	Running parallelism of surface C against surface A(Note)	0.008	0.004	0.001
	Running parallelism of surface D against surface B(Note)	0.008	0.004	0.001

Note) If the stroke is more than 40 mm, contact THK.

- Accuracies of model SR-MS are categorized into precision, super precision and ultra precision grades by model number as indicated in Table39.

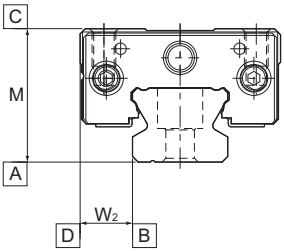

Fig.25

Table39 Accuracy Standard for Model SR-MS

Unit: mm

Model No.	Accuracy Standards	Precision grade	Super precision grade	Ultra precision grade
	Item	P	SP	UP
15 20	Dimensional tolerance in height M	0 −0.03	0 −0.015	0 −0.008
	Difference in Height M	0.006	0.004	0.003
	Dimensional tolerance in width W_2	0 −0.02	0 −0.015	0 −0.008
	Difference in Width W_2	0.006	0.004	0.003
	Running parallelism of surface C against surface A	ΔC (as shown in Table40)		
	Running parallelism of surface D against surface B	ΔD (as shown in Table40)		

Table40 LM Rail Length and Running Parallelism by Accuracy Standard

Unit: μm

LM rail length (mm)		Running Parallelism Values		
Above	Or less	Precision grade	Super precision grade	Ultra precision grade
		P	SP	UP
—	50	2	1.5	1
50	80	2	1.5	1
80	125	2	1.5	1
125	200	2	1.5	1
200	250	2.5	1.5	1
250	315	3	1.5	1
315	400	3.5	2	1.5

LM Guide

Features and Dimensions of Each Model

Structure and Features of the Caged Ball LM Guide

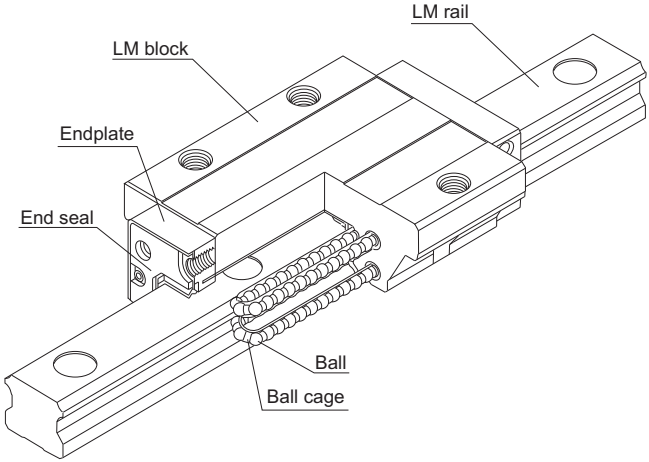

Fig.1 Structural Drawing of the Caged Ball LM Guide Model SHS

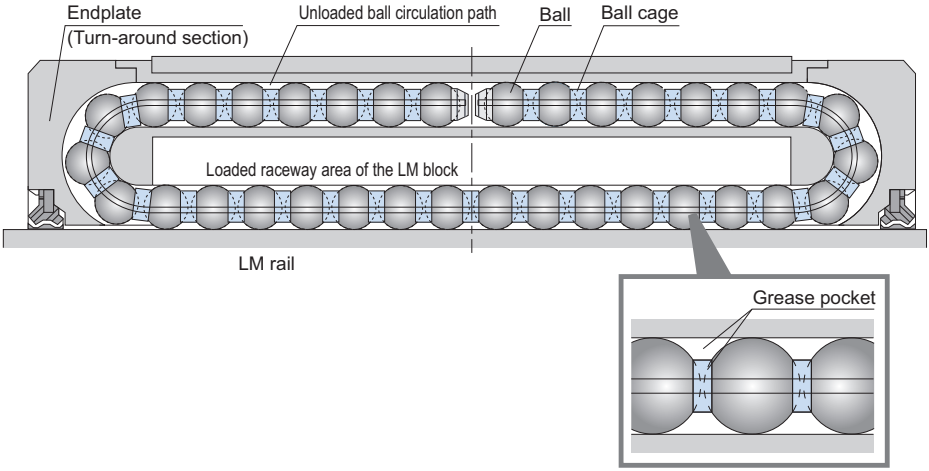

Fig.2 Circulation Structure inside the LM Block of the Caged Ball LM Guide

With the Caged Ball LM Guide, the use of a ball cage allows lines of evenly spaced balls to circulate, thus to eliminate friction between the balls.
In addition, grease held in a space between the ball circulation path and the ball cage (grease pocket) is applied on the contact surface between each ball and the ball cage as the ball rotates, forming an oil film on the ball surface. As a result, an oil film is not easily broken.

Advantages of the Ball Cage Technology

(1) The absence of friction between balls, together with increased grease retention, achieves long service life and long-term maintenance-free (lubrication-free) operation.
(2) The absence of ball-to-ball collision achieves low noise and acceptable running sound.
(3) The absence of friction between balls achieves low heat generation and high speed operation.
(4) The circulation of lines of evenly spaced balls ensures smooth ball rotation.
(5) The absence of friction between balls allows high grease retention and low dust generation.

[Long Service Life and Long-term Maintenance-free Operation]

● **Data on Long Service Life and Long-term Maintenance-free Operation**

Use of a ball cage eliminates friction between balls and increases grease retention, thus to achieve long service life and long-term maintenance-free operation.

[Condition]
Model No. : SHS25/HSR25
Speed : 60m/min
Stroke : 350mm
Acceleration: 9.8m/s^2
Orientation : horizontal
Load : Caged Ball LM Guide model SHS: 11.1kN
Conventional full-ball type model HSR: 9.8kN

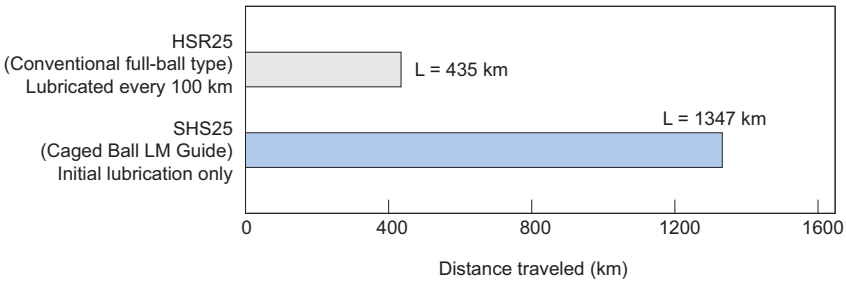

[Low Noise, Acceptable Running Sound]

● Noise Level Data

Since the ball circulation path inside the LM block is made of resin, metallic noise between balls and the LM block is eliminated. In addition, use of a ball cage eliminates metallic noise of ball-to-ball collision, allowing a low noise level to be maintained even at high speed.

Model SHS35LV: Caged Ball LM Guide
Model HSR35LR: conventional full-ball type

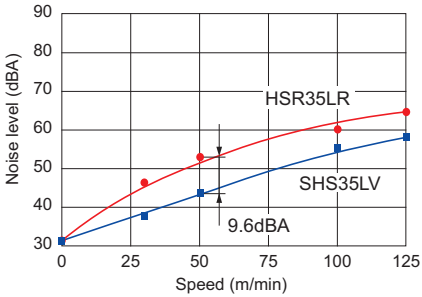

Comparison of Noise Levels between Model SHS35LV and Model HSR35LR

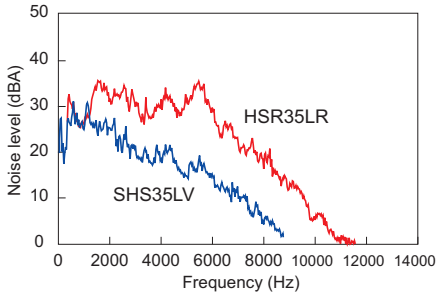

Comparison of Noise Levels between Model SHS35LV and Model HSR35LR (at speed of 50 m/min)

[High Speed]

● High-speed Durability Test Data

Since use of a ball cage eliminates friction between balls, only a low level of heat is generated and superbly high speed is achieved.

[Condition]

Model No. : Caged Ball LM Guide Model SHS65LVSS
Speed : 200m/min
Stroke : 2500mm
Lubrication : initial lubrication only
Applied load: 34.5kN
Acceleration: 1.5G

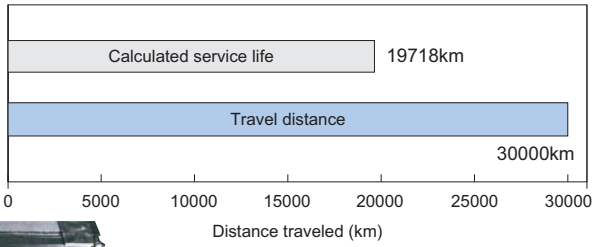

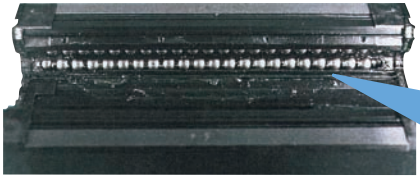

Grease remains, and no anomaly is observed in the balls and grease.

Detail view of the ball cage

[Smooth Motion]

● Rolling Resistance Data

Use of a ball cage allows the balls to be uniformly aligned and prevents a line of balls from meandering as they enter the LM block. This enables smooth and stable motion to be achieved, minimizes fluctuations in rolling resistance, and ensures high accuracy, in any mounting orientation.

Model SHS25LV: Caged Ball LM Guide
Model HSR25LR: conventional full-ball type

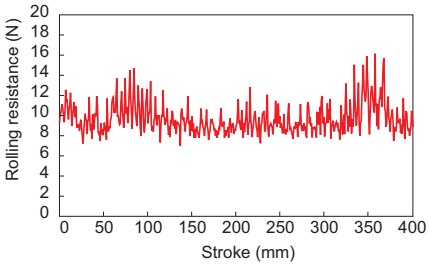

Rolling Resistance Fluctuation Data with HSR25LR
(Feeding speed: 10mm/sec)

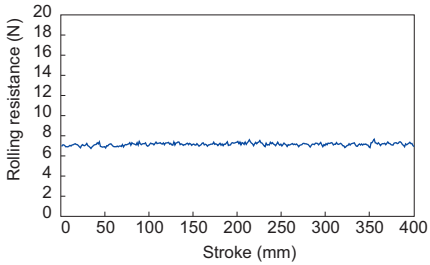

Rolling Resistance Fluctuation Data with SHS25LV
(Feeding speed: 10mm/sec)

[Low dust generation]

● Low Dust Generation Data

In addition to friction between balls, metallic contact has also been eliminated by using resin for the through holes. Furthermore, the Caged Ball LM Guide has a high level of grease retention and minimizes fly loss of grease, thus to achieve superbly low dust generation.

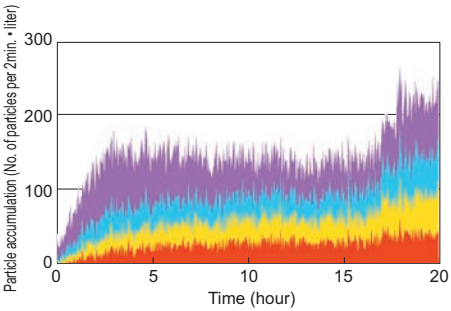

Conventional Full-ball Type

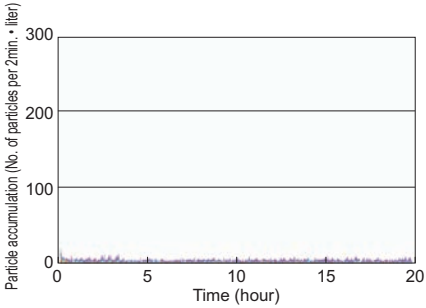

Caged Ball LM Guide Model SSR20

SHS

Caged Ball LM Guide Global Standard Size Model SHS

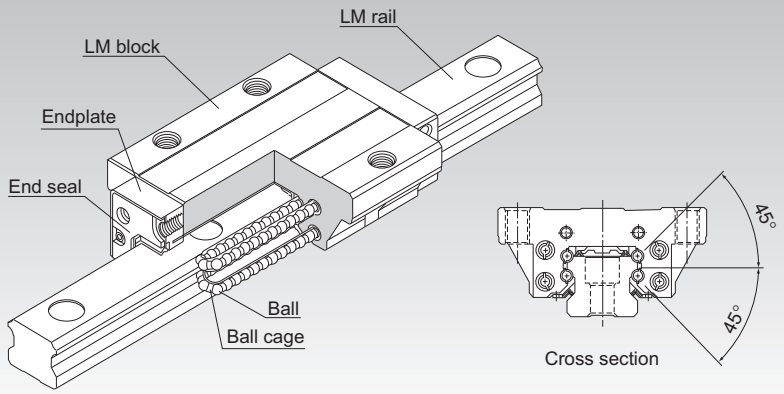

*For the Ball Cage, see A1-88.

Point of Selection A1-10

Point of Design A1-434

Options A1-457

Model No. A1-522

Precautions on Use A1-528

Accessories for Lubrication A24-1

Mounting Procedure and Maintenance B1-89

Equivalent moment factor A1-43

Rated Loads in All Directions A1-58

Equivalent factor in each direction A1-60

Radial Clearance A1-70

Accuracy Standards A1-76

Shoulder Height of the Mounting Base and the Corner Radius A1-444

Permissible Error of the Mounting Surface A1-450

Dimensions of Each Model with an Option Attached A1-470

Structure and Features

Balls roll in four rows of raceways precision-ground on an LM rail and an LM block, and ball cages and endplates incorporated in the LM block allow the balls to circulate.
Each row of balls is placed at a contact angle of 45° so that the rated loads applied to the LM block are uniform in the four directions (radial, reverse radial and lateral directions), enabling the LM Guide to be used in all orientations. In addition, the LM block can receive a well-balanced preload, increasing the rigidity in the four directions while maintaining a constant, low friction coefficient. With the low sectional height and the high rigidity design of the LM block, this model achieves highly accurate and stable straight motion.

[4-way Equal Load]

Each row of balls is placed at a contact angle of 45° so that the rated loads applied to the LM block are uniform in the four directions (radial, reverse radial and lateral directions), enabling the LM Guide to be used in all orientations and in extensive applications.

[Self-adjustment Capability]

The self-adjustment capability through front-to-front configuration of THK's unique circular-arc grooves (DF set) enables a mounting error to be absorbed even under a preload, thus to achieve highly accurate, smooth straight motion.

[Global Standard Size]

SHS is designed to have dimensions almost the same as that of Full Ball LM Guide model HSR, which THK as a pioneer of the linear motion system has developed and is practically a global standard size.

[Low Center of Gravity, High Rigidity]

As a result of downsizing the LM rail section, the center of gravity is lowered and the rigidity is increased.

Types and Features

Model SHS-C

Specification Table⇒A1-96

The flange of the LM block has tapped holes.
Can be mounted from the top or the bottom.
Used in places where the table cannot have through holes for mounting bolts.

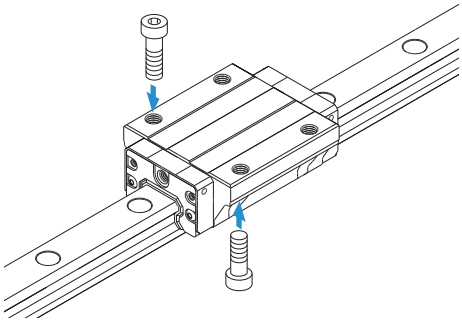

Model SHS-V

Specification Table⇒A1-98

With this type, the LM block has a smaller width (W) and tapped holes.
Used in places where the space for table width is limited.

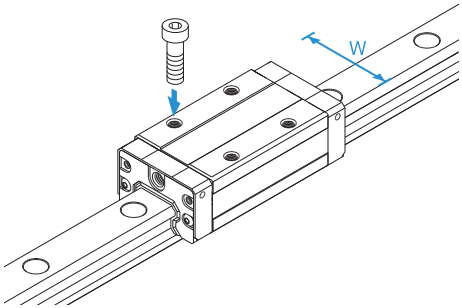

Model SHS-R

Specification Table⇒A1-100

The LM block has a smaller width (W) and the mounting holes are tapped.
It succeeds the height dimension of full-ball type LM Guide HSR-R.

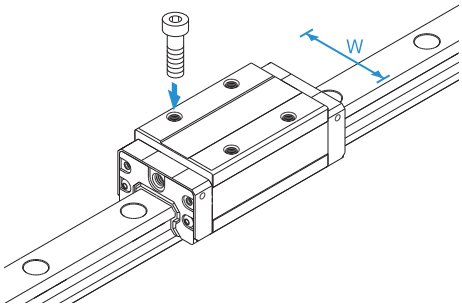

Model SHS-LC

Specification Table⇒A1-96

The LM block has the same cross-sectional shape as model SHS-C, but has a longer overall LM block length (L) and a greater rated load.

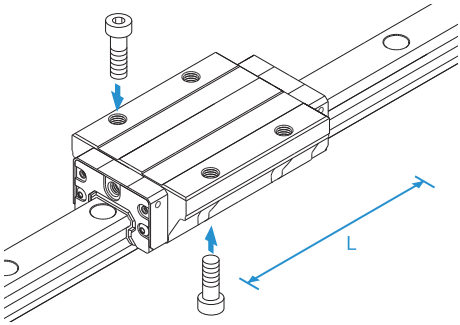

Model SHS-LV

Specification Table⇒A1-98

The LM block has the same cross-sectional shape as model SHS-V, but has a longer overall LM block length (L) and a greater rated load.

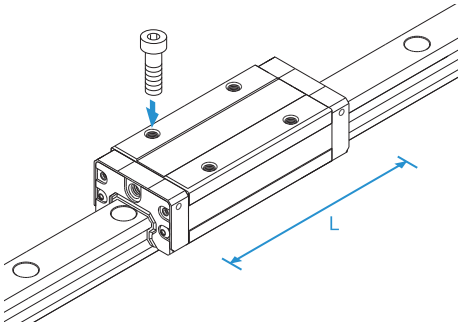

Model SHS-LR

Specification Table⇒A1-100

The LM block has the same cross-sectional shape as model SHS-R, but has a longer overall LM block length (L) and a greater rated load.

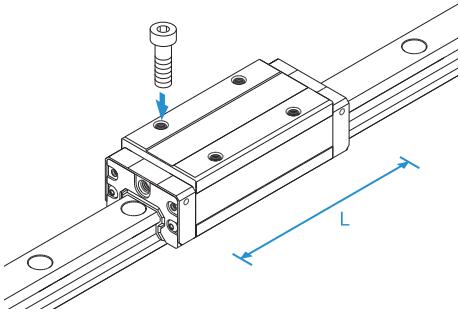

Models SHS-C and SHS-LC

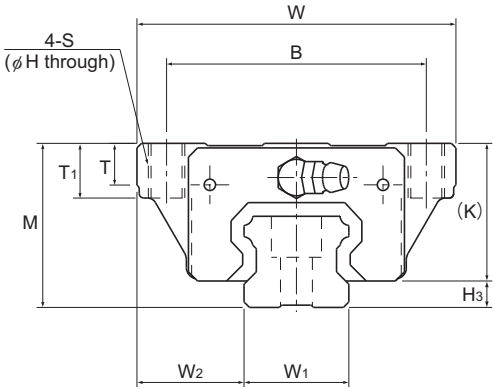

Model No.	Outer dimensions			LM block dimensions											Pilot hole for side nipple**		
	Height M	Width W	Length L	B	C	S	H	L_1	T	T_1	K	N	E	Grease nipple	e_0	f_0	D_0
SHS 15C SHS 15LC	24	47	64.4 79.4	38	30	M5	4.4	48 63	5.9	8	21	5.5	5.5	PB1021B	4	4	3
SHS 20C SHS 20LC	30	63	79 98	53	40	M6	5.4	59 78	7.2	10	25.4	6.5	12	B-M6F	4.3	5.3	3
SHS 25C SHS 25LC	36	70	92 109	57	45	M8	6.8	71 88	9.1	12	30.2	7.5	12	B-M6F	4.5	5.5	3
SHS 30C SHS 30LC	42	90	106 131	72	52	M10	8.5	80 105	11.5	15	35	8	12	B-M6F	5.8	6	5.2
SHS 35C SHS 35LC	48	100	122 152	82	62	M10	8.5	93 123	11.5	15	40.5	8	12	B-M6F	6.5	5.5	5.2
SHS 45C SHS 45LC	60	120	140 174	100	80	M12	10.5	106 140	14.1	18	51.1	10.5	16	B-PT1/8	8	8	5.2
SHS 55C SHS 55LC	70	140	171 213	116	95	M14	12.5	131 173	16	21	57.3	11	16	B-PT1/8	10	8	5.2
SHS 65C SHS 65LC	90	170	221 272	142	110	M16	14.5	175 226	18.8	24	71	19	16	B-PT1/8	10	12	5.2

Model number coding

SHS25 LC 2 QZ KKHH C0 +1200L P Z T -Ⅱ

- SHS25: Model number
- LC: Type of LM block
- 2: No. of LM blocks used on the same rail
- QZ: With QZ Lubricator
- KKHH: Contamination protection accessory symbol (*1)
- C0: Radial clearance symbol (*2)
  Normal (No symbol)
  Light preload (C1)
  Medium preload (C0)
- +1200L: LM rail length (in mm)
- P: Accuracy symbol (*3)
  Normal grade (No Symbol)/High accuracy grade (H)
  Precision grade (P)/Super precision grade (SP)
  Ultra precision grade (UP)
- Z: With steel tape
- T: Symbol for LM rail jointed use
- -Ⅱ: Symbol for No. of rails used on the same plane (*4)

(*1) See contamination protection accessory on A1-494. (*2) See A1-70. (*3) See A1-76. (*4) See A1-13.

Note) This model number indicates that a single-rail unit constitutes one set. (i.e., required number of sets when 2 rails are used in parallel is 2 at a minimum.)
Those models equipped with QZ Lubricator cannot have a grease nipple. When desiring a grease nipple for a model attached with QZ, contact THK.

Download data by searching for the corresponding model number on the Technical Support site. https://tech.thk.com

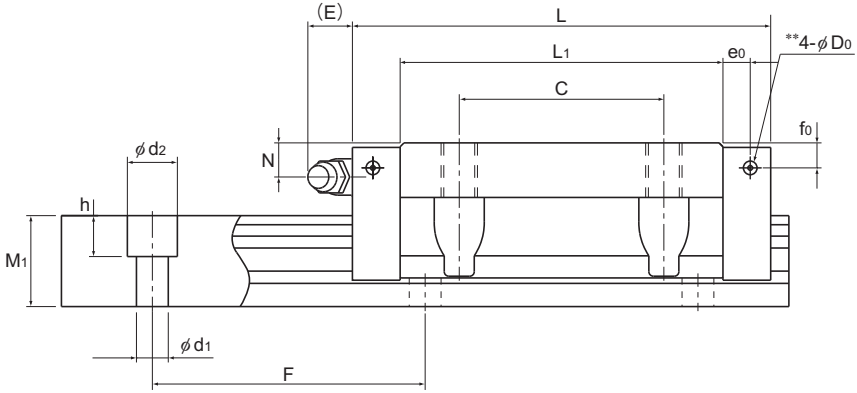

Unit: mm

		LM rail dimensions						Basic load rating		Static permissible moment kN-m*					Mass	
		Width		Height	Pitch		Length*	C	C_0	M_A		M_B		M_C	LM block	LM rail
	H_3	W_1 0 -0.05	W_2	M_1	F	$d_1 \times d_2 \times h$	Max	kN	kN	1 block	Double blocks	1 block	Double blocks	1 block	kg	kg/m
	3	15	16	13	60	4.5×7.5×5.3	3000	14.2 17.2	24.2 31.9	0.175 0.296	0.898 1.43	0.175 0.296	0.898 1.43	0.16 0.212	0.23 0.29	1.3
	4.6	20	21.5	16.5	60	6×9.5×8.5	3000	22.3 28.1	38.4 50.3	0.334 0.568	1.75 2.8	0.334 0.568	1.75 2.8	0.361 0.473	0.46 0.61	2.3
	5.8	23	23.5	20	60	7×11×9	3000	31.7 36.8	52.4 64.7	0.566 0.848	2.75 3.98	0.566 0.848	2.75 3.98	0.563 0.696	0.72 0.89	3.2
	7	28	31	23	80	9×14×12	3000	44.8 54.2	66.6 88.8	0.786 1.36	4.08 6.6	0.786 1.36	4.08 6.6	0.865 1.15	1.34 1.66	4.5
	7.5	34	33	26	80	9×14×12	3000	62.3 72.9	96.6 127	1.38 2.34	6.76 10.9	1.38 2.34	6.76 10.9	1.53 2.01	1.9 2.54	6.2
	8.9	45	37.5	32	105	14×20×17	3090	82.8 100	126 166	2.05 3.46	10.1 16.3	2.05 3.46	10.1 16.3	2.68 3.53	3.24 4.19	10.4
	12.7	53	43.5	38	120	16×23×20	3060	128 161	197 259	3.96 6.68	19.3 31.1	3.96 6.68	19.3 31.1	4.9 6.44	5.35 6.97	14.5
	19	63	53.5	53	150	18×26×22	3000	205 253	320 408	8.26 13.3	40.4 62.6	8.26 13.3	40.4 62.6	9.4 11.9	10.7 13.7	23.7

Note) Pilot holes for side nipples** are not drilled through in order to prevent foreign material from entering the product.
THK will mount grease nipples per your request. Therefore, do not use the side nipple pilot holes** for purposes other than mounting a grease nipple.
The maximum length under "Length*" indicates the standard maximum length of an LM rail. (See A1-102.)
Static permissible moment*: 1 block: static permissible moment value with 1 LM block
Double blocks: static permissible moment value with 2 blocks closely contacting with each other

Options⇒A1-457

Models SHS-V and SHS-LV

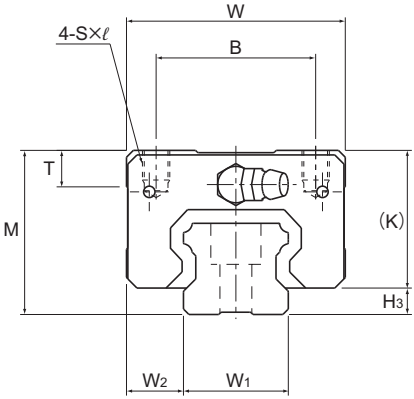

Model No.	Outer dimensions			LM block dimensions									Pilot hole for side nipple**		
	Height M	Width W	Length L	B	C	S×ℓ	L_1	T	K	N	E	Grease nipple	e_0	f_0	D_0
SHS 15V SHS 15LV	24	34	64.4 79.4	26	26 34	M4×4	48 63	5.9	21	5.5	5.5	PB1021B	4	4	3
SHS 20V SHS 20LV	30	44	79 98	32	36 50	M5×5	59 78	8	25.4	6.5	12	B-M6F	4.3	5.3	3
SHS 25V SHS 25LV	36	48	92 109	35	35 50	M6×6.5	71 88	8	30.2	7.5	12	B-M6F	4.5	5.5	3
SHS 30V SHS 30LV	42	60	106 131	40	40 60	M8×8	80 105	8	35	8	12	B-M6F	5.8	6	5.2
SHS 35V SHS 35LV	48	70	122 152	50	50 72	M8×10	93 123	14.7	40.5	8	12	B-M6F	6.5	5.5	5.2
SHS 45V SHS 45LV	60	86	140 174	60	60 80	M10×15	106 140	14.9	51.1	10.5	16	B-PT1/8	8	8	5.2
SHS 55V SHS 55LV	70	100	171 213	75	75 95	M12×15	131 173	19.4	57.3	11	16	B-PT1/8	10	8	5.2
SHS 65V SHS 65LV	90	126	221 272	76	70 120	M16×20	175 226	19.5	71	19	16	B-PT1/8	10	12	5.2

Model number coding

SHS30 V 2 QZ KKHH C1 +1240L P Z T -Ⅱ

- SHS30: Model number
- V: Type of LM block
- 2: No. of LM blocks used on the same rail
- QZ: With QZ Lubricator
- KKHH: Contamination protection accessory symbol (*1)
- C1: Radial clearance symbol (*2)
  Normal (No symbol)
  Light preload (C1)
  Medium preload (C0)
- +1240L: LM rail length (in mm)
- P: Accuracy symbol (*3)
  Normal grade (No Symbol)/High accuracy grade (H)
  Precision grade (P)/Super precision grade (SP)
  Ultra precision grade (UP)
- Z: With steel tape
- T: Symbol for LM rail jointed use
- -Ⅱ: Symbol for No. of rails used on the same plane (*4)

(*1) See contamination protection accessory on A1-494. (*2) See A1-70. (*3) See A1-76. (*4) See A1-13.

Note) This model number indicates that a single-rail unit constitutes one set. (i.e., required number of sets when 2 rails are used in parallel is 2 at a minimum.)
Those models equipped with QZ Lubricator cannot have a grease nipple. When desiring a grease nipple for a model attached with QZ, contact THK.

Download data by searching for the corresponding model number on the Technical Support site. https://tech.thk.com

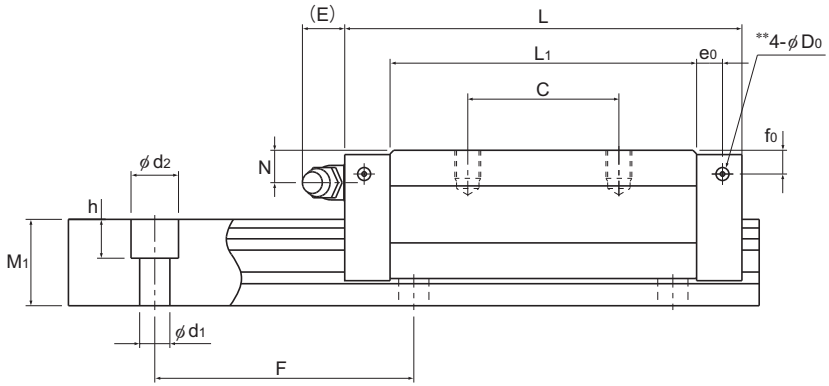

Unit: mm

	LM rail dimensions						Basic load rating		Static permissible moment kN-m*					Mass	
	Width		Height	Pitch		Length*	C	C_0	M_A		M_B		M_C	LM block	LM rail
H_3	W_1 0 -0.05	W_2	M_1	F	$d_1 \times d_2 \times h$	Max	kN	kN	1 block	Double blocks	1 block	Double blocks	1 block	kg	kg/m
3	15	9.5	13	60	4.5×7.5×5.3	3000	14.2 17.2	24.2 31.9	0.175 0.296	0.898 1.43	0.175 0.296	0.898 1.43	0.16 0.212	0.19 0.22	1.3
4.6	20	12	16.5	60	6×9.5×8.5	3000	22.3 28.1	38.4 50.3	0.334 0.568	1.75 2.8	0.334 0.568	1.75 2.8	0.361 0.473	0.35 0.46	2.3
5.8	23	12.5	20	60	7×11×9	3000	31.7 36.8	52.4 64.7	0.566 0.848	2.75 3.98	0.566 0.848	2.75 3.98	0.563 0.696	0.54 0.67	3.2
7	28	16	23	80	9×14×12	3000	44.8 54.2	66.6 88.8	0.786 1.36	4.08 6.6	0.786 1.36	4.08 6.6	0.865 1.15	0.94 1.16	4.5
7.5	34	18	26	80	9×14×12	3000	62.3 72.9	96.6 127	1.38 2.34	6.76 10.9	1.38 2.34	6.76 10.9	1.53 2.01	1.4 1.84	6.2
8.9	45	20.5	32	105	14×20×17	3090	82.8 100	126 166	2.05 3.46	10.1 16.3	2.05 3.46	10.1 16.3	2.68 3.53	2.54 3.19	10.4
12.7	53	23.5	38	120	16×23×20	3060	128 161	197 259	3.96 6.68	19.3 31.1	3.96 6.68	19.3 31.1	4.9 6.44	4.05 5.23	14.5
19	63	31.5	53	150	18×26×22	3000	205 253	320 408	8.26 13.3	40.4 62.6	8.26 13.3	40.4 62.6	9.4 11.9	8.41 10.7	23.7

Note) Pilot holes for side nipples** are not drilled through in order to prevent foreign material from entering the product.
THK will mount grease nipples per your request. Therefore, do not use the side nipple pilot holes** for purposes other than mounting a grease nipple.
The maximum length under "Length*" indicates the standard maximum length of an LM rail. (See A1-102.)
Static permissible moment*: 1 block: static permissible moment value with 1 LM block
Double blocks: static permissible moment value with 2 blocks closely contacting with each other

Options⇒A1-457

Models SHS-R and SHS-LR

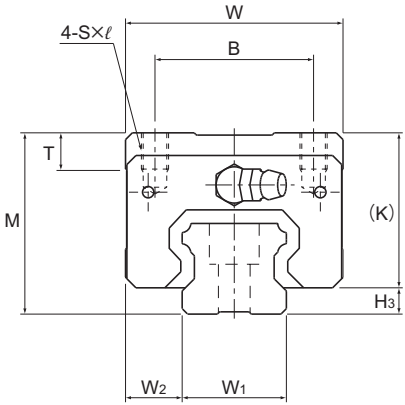

Model No.	Outer dimensions			LM block dimensions									Pilot hole for side nipple**		
	Height M	Width W	Length L	B	C	S×ℓ	L_1	T	K	N	E	Grease nipple	e_0	f_0	D_0
SHS 15R	28	34	64.4	26	26	M4×5	48	5.9	25	9.5	5.5	PB1021B	4	8	3
SHS 25R SHS 25LR	40	48	92 109	35	35 50	M6×8	71 88	8	34.2	11.5	12	B-M6F	6	9.5	3
SHS 30R SHS 30LR	45	60	106 131	40	40 60	M8×10	80 105	8	38	11	12	B-M6F	5.8	9	5.2
SHS 35R SHS 35LR	55	70	122 152	50	50 72	M8×12	93 123	14.7	47.5	15	12	B-M6F	6.5	12.5	5.2
SHS 45R SHS 45LR	70	86	140 174	60	60 80	M10×17	106 140	14.9	61.1	20.5	16	B-PT1/8	8	18	5.2
SHS 55R SHS 55LR	80	100	171 213	75	75 95	M12×18	131 173	19.4	67.3	21	16	B-PT1/8	10	18	5.2

Model number coding

SHS45 LR 2 QZ KKHH C0 +1200L P T -Ⅱ

- SHS45: Model number
- LR: Type of LM block
- 2: No. of LM blocks used on the same rail
- QZ: With QZ Lubricator
- KKHH: Contamination protection accessory symbol (*1)
- C0: Radial clearance symbol (*2)
  - Normal (No symbol)
  - Light preload (C1)
  - Medium preload (C0)
- +1200L: LM rail length (in mm)
- P: Accuracy symbol (*3)
  - Normal grade (No Symbol)/High accuracy grade (H)
  - Precision grade (P)/Super precision grade (SP)
  - Ultra precision grade (UP)
- T: Symbol for LM rail jointed use
- -Ⅱ: Symbol for No. of rails used on the same plane (*4)

(*1) See contamination protection accessory on A1-494. (*2) See A1-70. (*3) See A1-76. (*4) See A1-13.

Note) This model number indicates that a single-rail unit constitutes one set. (i.e., required number of sets when 2 rails are used in parallel is 2 at a minimum.)
Those models equipped with QZ Lubricator cannot have a grease nipple. When desiring a grease nipple for a model attached with QZ, contact THK.

Download data by searching for the corresponding model number on the Technical Support site. https://tech.thk.com

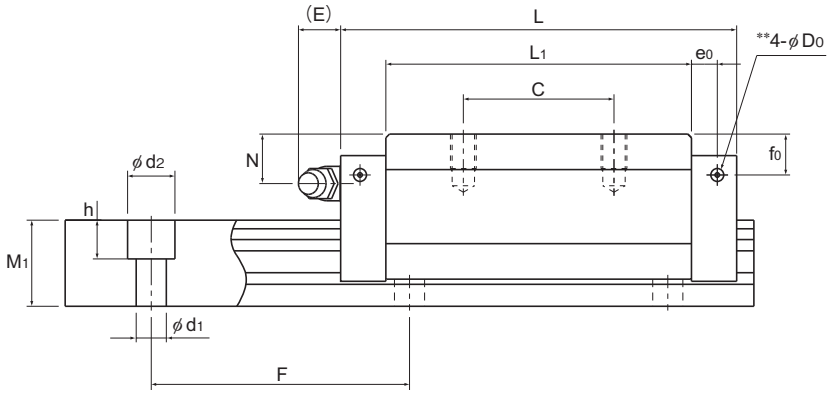

Unit: mm

		LM rail dimensions						Basic load rating		Static permissible moment kN-m*					Mass	
		Width		Height	Pitch		Length*	C	C_0	M_A		M_B		M_C	LM block	LM rail
	H_3	W_1 0 -0.05	W_2	M_1	F	$d_1 \times d_2 \times h$	Max	kN	kN	1 block	Double blocks	1 block	Double blocks	1 block	kg	kg/m
	3	15	9.5	13	60	4.5×7.5×5.3	3000	14.2	24.2	0.175	0.898	0.175	0.898	0.16	0.22	1.3
	5.8	23	12.5	20	60	7×11×9	3000	31.7 36.8	52.4 64.7	0.566 0.848	2.75 3.98	0.566 0.848	2.75 3.98	0.563 0.696	0.66 0.8	3.2
	7	28	16	23	80	9×14×12	3000	44.8 54.2	66.6 88.8	0.786 1.36	4.08 6.6	0.786 1.36	4.08 6.6	0.865 1.15	1.04 1.36	4.5
	7.5	34	18	26	80	9×14×12	3000	62.3 72.9	96.6 127	1.38 2.34	6.76 10.9	1.38 2.34	6.76 10.9	1.53 2.01	1.8 2.34	6.2
	8.9	45	20.5	32	105	14×20×17	3090	82.8 100	126 166	2.05 3.46	10.1 16.3	2.05 3.46	10.1 16.3	2.68 3.53	3.24 4.19	10.4
	12.7	53	23.5	38	120	16×23×20	3060	128 161	197 259	3.96 6.68	19.3 31.1	3.96 6.68	19.3 31.1	4.9 6.44	5.05 6.57	14.5

Note) Pilot holes for side nipples** are not drilled through in order to prevent foreign material from entering the product.
THK will mount grease nipples per your request. Therefore, do not use the side nipple pilot holes** for purposes other than mounting a grease nipple.
The maximum length under "Length*" indicates the standard maximum length of an LM rail. (See A1-102.)
Static permissible moment*: 1 block: static permissible moment value with 1 LM block
Double blocks: static permissible moment value with 2 blocks closely contacting with each other

Options⇒A1-457

Standard Length and Maximum Length of the LM Rail

Table1 shows the standard and maximum lengths of the SHS model rail. If a rail length longer than the listed max length is required, rails may be jointed to meet the overall length. Contact THK for details. For special rail lengths, it is recommended to use a value corresponding to the G dimension from the table. As the G dimension increases, this portion becomes less stable and the accuracy performance is severely impacted.

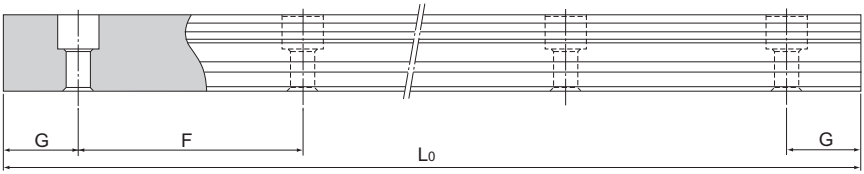

Table1 Standard Length and Maximum Length of the LM Rail for Model SHS

Unit: mm

Model No.	SHS 15	SHS 20	SHS 25	SHS 30	SHS 35	SHS 45	SHS 55	SHS 65
LM rail standard length (L_0)	160	220	220	280	280	570	780	1270
	220	280	280	360	360	675	900	1570
	280	340	340	440	440	780	1020	2020
	340	400	400	520	520	885	1140	2620
	400	460	460	600	600	990	1260	
	460	520	520	680	680	1095	1380	
	520	580	580	760	760	1200	1500	
	580	640	640	840	840	1305	1620	
	640	700	700	920	920	1410	1740	
	700	760	760	1000	1000	1515	1860	
	760	820	820	1080	1080	1620	1980	
	820	940	940	1160	1160	1725	2100	
	940	1000	1000	1240	1240	1830	2220	
	1000	1060	1060	1320	1320	1935	2340	
	1060	1120	1120	1400	1400	2040	2460	
	1120	1180	1180	1480	1480	2145	2580	
	1180	1240	1240	1560	1560	2250	2700	
	1240	1360	1300	1640	1640	2355	2820	
	1360	1480	1360	1720	1720	2460	2940	
	1480	1600	1420	1800	1800	2565	3060	
	1600	1720	1480	1880	1880	2670		
		1840	1540	1960	1960	2775		
		1960	1600	2040	2040	2880		
		2080	1720	2200	2200	2985		
		2200	1840	2360	2360	3090		
			1960	2520	2520			
			2080	2680	2680			
			2200	2840	2840			
			2320	3000	3000			
			2440					
Standard pitch F	60	60	60	80	80	105	120	150
G	20	20	20	20	20	22.5	30	35
Max length	3000	3000	3000	3000	3000	3090	3060	3000

Note1) The maximum length varies with accuracy grades. Contact THK for details.
Note2) If jointed rails are not allowed and a greater length than the maximum values above is required, contact THK.

Tapped-hole LM Rail Type of Model SHS

SHS model rails also include a type where the LM rail is tapped from the bottom. This type is useful when mounting from the bottom of the base and when increased contamination protection is desired.

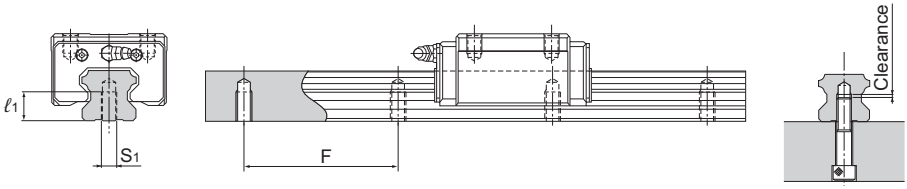

(1) Determine the bolt length so that a clearance of 2 to 5 mm is secured between the bolt end and the bottom of the tap (effective tap depth). (See figure above.)
(2) For standard pitches of the taps, see Table1 on A1-102.

Table2 Dimensions of the LM Rail Tap

Unit: mm

Model No.	S_1	Effective tap depth ℓ_1
SHS 15	M5	8
SHS 20	M6	10
SHS 25	M6	12
SHS 30	M8	15
SHS 35	M8	17
SHS 45	M12	20
SHS 55	M14	24
SHS 65	M20	30

Model number coding

SHS35 LC2UU +1000LH K

Symbol for tapped-hole LM rail type

SSR

Caged Ball LM Guide Radial Type Model SSR

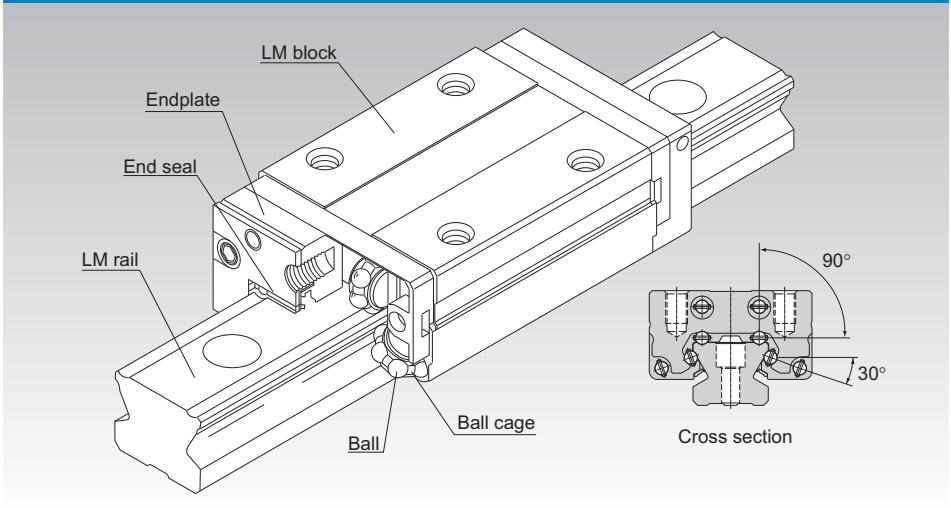

*For the Ball Cage, see A1-88.

Point of Selection A1-10

Point of Design A1-434

Options A1-457

Model No. A1-522

Precautions on Use A1-528

Accessories for Lubrication A24-1

Mounting Procedure and Maintenance B1-89

Equivalent moment factor A1-43

Rated Loads in All Directions A1-58

Equivalent factor in each direction A1-60

Radial Clearance A1-70

Accuracy Standards A1-76

Shoulder Height of the Mounting Base and the Corner Radius A1-447

Permissible Error of the Mounting Surface A1-450

Dimensions of Each Model with an Option Attached A1-470

Structure and Features

Balls roll in four rows of raceways precision-ground on an LM rail and an LM block, and ball cages and endplates incorporated in the LM block allow the balls to circulate.
Use of the ball cage eliminates friction between balls and increases grease retention, thus to achieve low noise, high speed and long-term maintenance-free operation.

[Compact, Radial Type]
Since it is a compactly designed model that has a low sectional height and a ball contact structure in the radial direction, this model is optimal for horizontal guide units.

[Superb Planar Running Accuracy]
Use of a ball contact structure that is highly resistant to loads in the radial direction minimizes radial displacement under radial loads and provides stable, highly accurate motion.

[Self-adjustment Capability]
The self-adjustment capability through front-to-front configuration of THK's unique circular-arc grooves (DF set) enables a mounting error to be absorbed even under a preload, thus to achieve highly accurate, smooth straight motion.

[Stainless Steel Type also Available as Standard]
A stainless steel type with its LM block, LM rail and balls all made of stainless steel, which is superbly corrosion resistant, is also available as standard.

Types and Features

Model SSR-XW

Specification Table⇒A1-108

With this type, the LM block has a smaller width (W) and tapped holes.

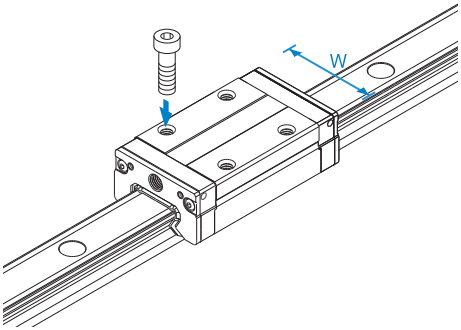

Model SSR-XV

Specification Table⇒A1-110

This type has the same cross-sectional shape as SSR-XW but has a shorter overall LM block length (L).

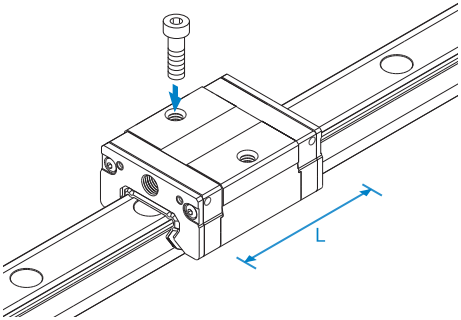

Model SSR-XTB

Specification Table⇒A1-112

Since the LM block can be mounted from the bottom, this type is optimal for applications where through holes for mounting bolts cannot be drilled on the table.

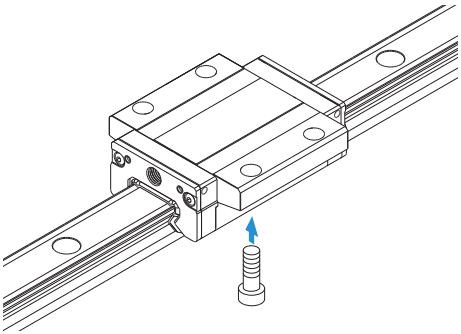

Models SSR-XW and SSR-XWM

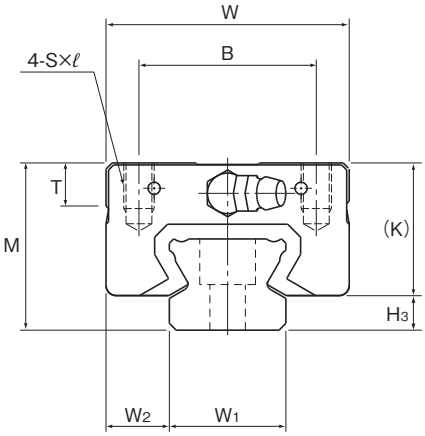

Model No.	Outer dimensions			LM block dimensions												
	Height M	Width W	Length L	B	C	S×ℓ	L_1	T	K	N	E	f_0	e_0	D_0	Grease nipple	H_3
SSR 15XW SSR 15XWM	24	34	56.9	26	26	M4×7	39.9	6.5	19.5	4.5	5.5	2.7	4.5	3	PB1021B	4.5
SSR 20XW SSR 20XWM	28	42	66.5	32	32	M5×8	46.6	8.2	22	5.5	12	2.9	5.2	3	B-M6F	6
SSR 25XW SSR 25XWM	33	48	83	35	35	M6×9	59.8	8.4	26.2	6	12	3.3	6.8	3	B-M6F	6.8
SSR 30XW SSR 30XWM	42	60	97	40	40	M8×12	70.7	11.3	32.5	8	12	4.5	7.6	4	B-M6F	9.5
SSR 35XW	48	70	110.9	50	50	M8×12	80.5	13	36.5	8.5	12	4.7	8.8	4	B-M6F	11.5

Note) Symbol M indicates that stainless steel is used in the LM block, LM rail and balls. Those models marked with this symbol are therefore highly resistant to corrosion and environment.

Model number coding

SSR25X W 2 QZ UU C1 M +1200L Y P T M -Ⅱ

- SSR25X: Model number
- W: Type of LM block
- 2: No. of LM blocks used on the same rail
- QZ: With QZ lubricator
- UU: Contamination protection accessory symbol (*1)
- C1: Radial clearance symbol (*2) Normal (No symbol) Light preload (C1)
- M: Stainless steel LM block
- +1200L: LM rail length (in mm)
- Y: Applied to only 15 and 25
- P: Accuracy symbol (*3) Normal grade (No Symbol) High accuracy grade (H)/Precision grade (P) Super precision grade (SP)/Ultra precision grade (UP)
- T: Symbol for LM rail jointed use
- M: Stainless steel LM rail
- -Ⅱ: Symbol for No. of rails used on the same plane (*4)

(*1) See contamination protection accessory on A1-494. (*2) See A1-70. (*3) See A1-76. (*4) See A1-13.

Note) This model number indicates that a single-rail unit constitutes one set. (i.e., required number of sets when 2 rails are used in parallel is 2 at a minimum.) Those models equipped with QZ Lubricator cannot have a grease nipple. When desiring a grease nipple for a model attached with QZ, contact THK.

Download data by searching for the corresponding model number on the Technical Support site. https://tech.thk.com

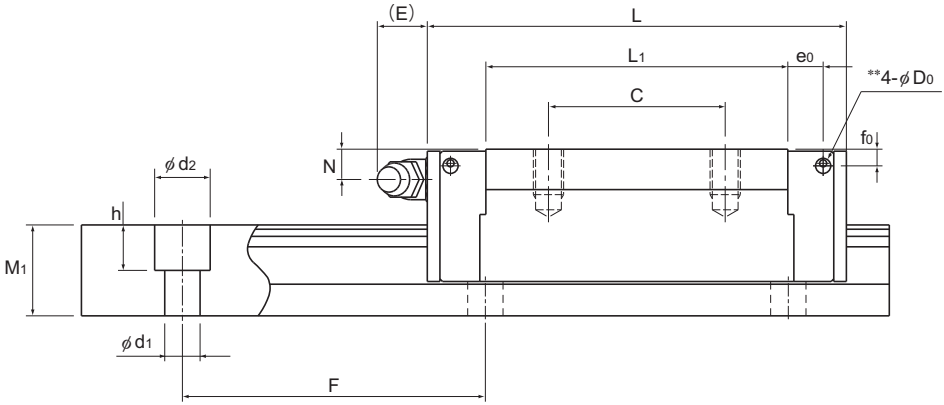

Unit: mm

	LM rail dimensions						Basic load rating		Static permissible moment kN-m*					Mass	
	Width		Height	Pitch		Length*	C	C_0	M_A		M_B		M_C	LM block	LM rail
	W_1 ±0.05	W_2	M_1	F	$d_1 \times d_2 \times h$	Max	kN	kN	1 block	Double blocks	1 block	Double blocks	1 block	kg	kg/m
	15	9.5	12.5	60	4.5×7.5×5.3	3000 (1240)	14.7	16.5	0.0792	0.44	0.0486	0.274	0.0962	0.15	1.2
	20	11	15.5	60	6×9.5×8.5	3000 (1480)	19.6	23.4	0.138	0.723	0.0847	0.448	0.18	0.25	2.1
	23	12.5	18	60	7×11×9	3000 (2020)	31.5	36.4	0.258	1.42	0.158	0.884	0.33	0.4	2.7
	28	16	23	80	7×11×9	3000 (2520)	46.5	52.7	0.446	2.4	0.274	1.49	0.571	0.8	4.3
	34	18	27.5	80	9×14×12	3000	64.6	71.6	0.711	3.72	0.437	2.31	0.936	1.1	6.4

Note1) Pilot holes for side nipples** are not drilled through in order to prevent foreign material from entering the product. THK will mount grease nipples per your request. Therefore, do not use the side nipple pilot holes** for purposes other than mounting a grease nipple.
The maximum length under "Length*" indicates the standard maximum length of an LM rail. (See A1-114.)
Static permissible moment*: 1 block: static permissible moment value with 1 LM block
Double blocks: static permissible moment value with 2 blocks closely contacting with each other

Note2) For models SSR15 and 25, two types of rails with different mounting hole dimensions are offered (see Table1). When, replacing this model with model SR, pay attention to the mounting hole dimension of the LM rail. Contact THK for details.

Table1 The dimension of the rail mounting hole

Model No.	Standard rail	Semi-Standard rail
SSR 15	For M4 (Symbol Y)	For M3 (No symbol)
SSR 25	For M6 (Symbol Y)	For M5 (No symbol)

Options⇒A1-457

Models SSR-XV and SSR-XVM

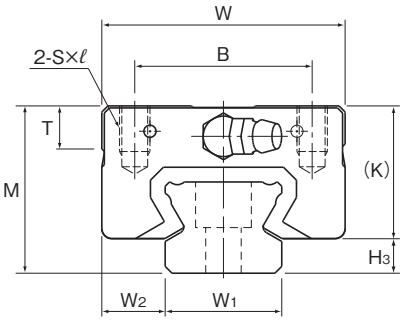

Model No.	Outer dimensions			LM block dimensions											
	Height M	Width W	Length L	B	S×ℓ	L_1	T	K	N	E	f_0	e_0	D_0	Grease nipple	H_3
SSR 15XV SSR 15XVM	24	34	40.3	26	M4×7	23.3	6.5	19.5	4.5	5.5	2.7	4.5	3	PB1021B	4.5
SSR 20XV SSR 20XVM	28	42	47.7	32	M5×8	27.8	8.2	22	5.5	12	2.9	5.2	3	B-M6F	6
SSR 25XV SSR 25XVM	33	48	60	35	M6×9	36.8	8.4	26.2	6	12	3.3	6.8	3	B-M6F	6.8

Note) Symbol M indicates that stainless steel is used in the LM block, LM rail and balls. Those models marked with this symbol are therefore highly resistant to corrosion and environment.

Model number coding

SSR25X V 2 QZ UU C1 M +1200L Y P T M -Ⅲ

- SSR25X: Model number
- V: Type of LM block
- 2: No. of LM blocks used on the same rail
- QZ: With QZ lubricator
- UU: Contamination protection accessory symbol (*1)
- C1: Radial clearance symbol (*2) Normal (No symbol) Light preload (C1)
- M: Stainless steel LM block
- +1200L: LM rail length (in mm)
- Y: Applied to only 15 and 25
- P: Accuracy symbol (*3) Normal grade (No Symbol) High accuracy grade (H)/Precision grade (P) Super precision grade (SP)/Ultra precision grade (UP)
- T: Symbol for LM rail jointed use
- M: Stainless steel LM rail
- -Ⅲ: Symbol for No. of rails used on the same plane (*4)

(*1) See contamination protection accessory on A1-494. (*2) See A1-70. (*3) See A1-76. (*4) See A1-13.

Note) This model number indicates that a single-rail unit constitutes one set. (i.e., required number of sets when 3 rails are used in parallel is 3 at a minimum.)
Those models equipped with QZ Lubricator cannot have a grease nipple. When desiring a grease nipple for a model attached with QZ, contact THK.

Download data by searching for the corresponding model number on the Technical Support site. https://tech.thk.com

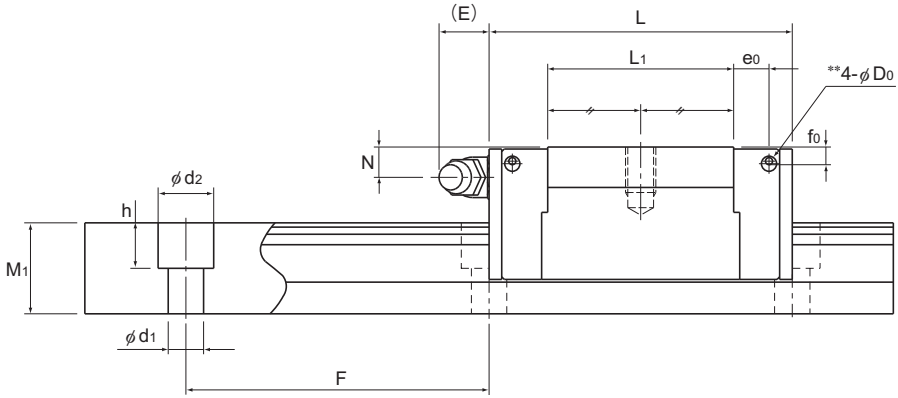

Unit: mm

	LM rail dimensions						Basic load rating		Static permissible moment kN-m*					Mass	
	Width		Height	Pitch		Length*	C	C_0	M_A		M_B		M_C	LM block	LM rail
	W_1 ±0.05	W_2	M_1	F	$d_1 \times d_2 \times h$	Max	kN	kN	1 block	Double blocks	1 block	Double blocks	1 block	kg	kg/m
	15	9.5	12.5	60	4.5×7.5×5.3	3000 (1240)	9.1	9.7	0.0303	0.192	0.0189	0.122	0.0562	0.08	1.2
	20	11	15.5	60	6×9.5×8.5	3000 (1480)	13.4	14.4	0.0523	0.336	0.0326	0.213	0.111	0.14	2.1
	23	12.5	18	60	7×11×9	3000 (2020)	21.7	22.5	0.104	0.661	0.0652	0.419	0.204	0.23	2.7

Note1) Pilot holes for side nipples** are not drilled through in order to prevent foreign material from entering the product. THK will mount grease nipples per your request. Therefore, do not use the side nipple pilot holes** for purposes other than mounting a grease nipple.
The maximum length under "Length*" indicates the standard maximum length of an LM rail. (See A1-114.)
Static permissible moment*: 1 block: static permissible moment value with 1 LM block
Double blocks: static permissible moment value with 2 blocks closely contacting with each other

Note2) For models SSR15 and 25, two types of rails with different mounting hole dimensions are offered (see Table1). When, replacing this model with model SR, pay attention to the mounting hole dimension of the LM rail. Contact THK for details.

Table1 The dimension of the rail mounting hole

Model No.	Standard rail	Semi-Standard rail
SSR 15	For M4 (Symbol Y)	For M3 (No symbol)
SSR 25	For M6 (Symbol Y)	For M5 (No symbol)

Options⇒A1-457

Model SSR-XTB

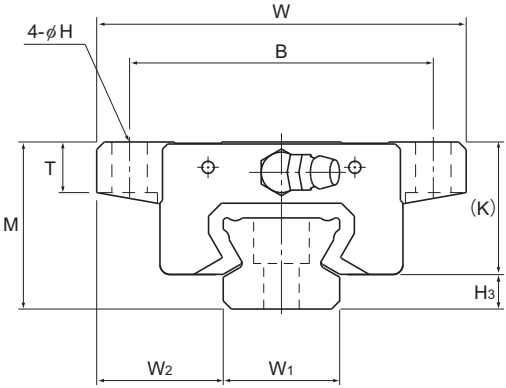

Model No.	Outer dimensions			LM block dimensions												
	Height M	Width W	Length L	B	C	H	L_1	T	K	N	E	f_0	e_0	D_0	Grease nipple	H_3
SSR 15XTB	24	52	56.9	41	26	4.5	39.9	7	19.5	4.5	5.5	2.7	4.5	3	PB1021B	4.5
SSR 20XTB	28	59	66.5	49	32	5.5	46.6	9	22	5.5	12	2.9	5.2	3	B-M6F	6
SSR 25XTB	33	73	83	60	35	7	59.8	10	26.2	6	12	3.3	6.8	3	B-M6F	6.8

Model number coding

SSR15X TB 2 QZ UU C1 +820L Y P T -Ⅱ

- SSR15X: Model number
- TB: Type of LM block
- 2: No. of LM blocks used on the same rail
- QZ: With QZ lubricator
- UU: Contamination protection accessory symbol (*1)
- C1: Radial clearance symbol (*2)
  - Normal (No symbol)
  - Light preload (C1)
  - Medium preload (C0)
- +820L: LM rail length (in mm)
- Y: Applied to only 15 and 25 sizes
- P: Accuracy symbol (*3)
  - Normal grade (No Symbol)
  - High accuracy grade (H)
  - Precision grade (P)
  - Super precision grade (SP)
  - Ultra precision grade (UP)
- T: Symbol for LM rail jointed use
- -Ⅱ: Symbol for No. of rails used on the same plane (*4)

(*1) See contamination protection accessory on A1-494. (*2) See A1-70. (*3) See A1-76. (*4) See A1-13.

Note) This model number indicates that a single-rail unit constitutes one set. (i.e., required number of sets when 2 rails are used in parallel is 2 at a minimum.)
Those models equipped with QZ Lubricator cannot have a grease nipple. When desiring a grease nipple for a model attached with QZ, contact THK.

Download data by searching for the corresponding model number on the Technical Support site. https://tech.thk.com

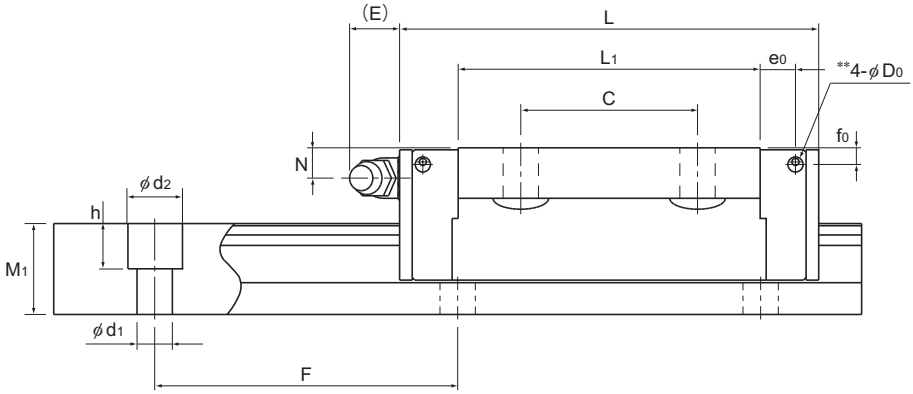

Unit: mm

	LM rail dimensions						Basic load rating		Static permissible moment kN-m*					Mass	
	Width		Height	Pitch		Length*	C	C_0	M_A		M_B		M_C	LM block	LM rail
	W_1 ±0.05	W_2	M_1	F	$d_1 \times d_2 \times h$	Max	kN	kN	1 block	Double blocks	1 block	Double blocks	1 block	kg	kg/m
	15	18.5	12.5	60	4.5×7.5×5.3	3000 (1240)	14.7	16.5	0.0792	0.44	0.0486	0.274	0.0962	0.19	1.2
	20	19.5	15.5	60	6×9.5×8.5	3000 (1480)	19.6	23.4	0.138	0.723	0.0847	0.448	0.18	0.31	2.1
	23	25	18	60	7×11×9	3000 (2020)	31.5	36.4	0.258	1.42	0.158	0.884	0.33	0.53	2.7

Note1) Pilot holes for side nipples** are not drilled through in order to prevent foreign material from entering the product. THK will mount grease nipples per your request. Therefore, do not use the side nipple pilot holes** for purposes other than mounting a grease nipple.
The maximum length under "Length*" indicates the standard maximum length of an LM rail. (See A1-114.)
Static permissible moment*: 1 block: static permissible moment value with 1 LM block
Double blocks: static permissible moment value with 2 blocks closely contacting with each other

Note2) For models SSR15 and 25, two types of rails with different mounting hole dimensions are offered (see Table1). When, replacing this model with model SR, pay attention to the mounting hole dimension of the LM rail. Contact THK for details.

Table1 The dimension of the rail mounting hole

Model No.	Standard rail	Semi-Standard rail
SSR 15	For M4 (Symbol Y)	For M3 (No symbol)
SSR 25	For M6 (Symbol Y)	For M5 (No symbol)

Options⇒A1-457

Standard Length and Maximum Length of the LM Rail

Table1 shows the standard lengths and the maximum lengths of model SSR variations. If the maximum length of the desired LM rail exceeds them, jointed rails will be used. Contact THK for details. For the G dimension when a special length is required, we recommend selecting the corresponding G value from the table. The longer the G dimension is, the less stable the G area may become after installation, thus causing an adverse impact to accuracy.

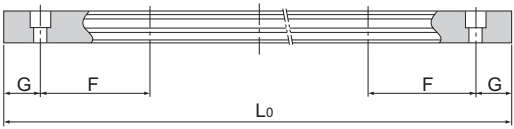

Table1 Standard Length and Maximum Length of the LM Rail

Unit: mm

Model No.	SSR 15X	SSR 20X	SSR 25X	SSR 30X	SSR 35X
LM rail standard length (L_0)	160 220 280 340 400 460 520 580 640 700 760 820 940 1000 1060 1120 1180 1240 1300 1360 1420 1480 1540	220 280 340 400 460 520 580 640 700 760 820 940 1000 1060 1120 1180 1240 1300 1360 1420 1480 1540 1600 1660 1720 1780 1840 1900 1960 2020 2080 2140	220 280 340 400 460 520 580 640 700 760 820 940 1000 1060 1120 1240 1300 1360 1420 1480 1540 1600 1660 1720 1780 1840 1900 1960 2020 2080 2140 2200 2260 2320 2380 2440	280 360 440 520 600 680 760 840 920 1000 1080 1160 1240 1320 1400 1480 1640 1720 1800 1880 1960 2040 2120 2200 2280 2360 2440 2520 2600 2680 2760 2840 2920	280 360 440 520 600 680 760 840 920 1000 1080 1160 1240 1320 1400 1480 1640 1720 1800 1880 1960 2040 2120 2200 2280 2360 2440 2520 2600 2680 2760 2840 2920
Standard pitch F	60	60	60	80	80
G	20	20	20	20	20
Max length	3000 (1240)	3000 (1480)	3000 (2020)	3000 (2520)	3000

Note1) The maximum length varies with accuracy grades. Contact THK for details.
Note2) If jointed rails are not allowed and a greater length than the maximum values above is required, contact THK.
Note3) The figures in the parentheses indicate the maximum lengths of stainless steel made models.

Tapped-hole LM Rail Type of Model SSR

SSR model rails also include a type where the LM rail is tapped from the bottom. This type is useful when mounting from the bottom of the base and when increased contamination protection is desired.

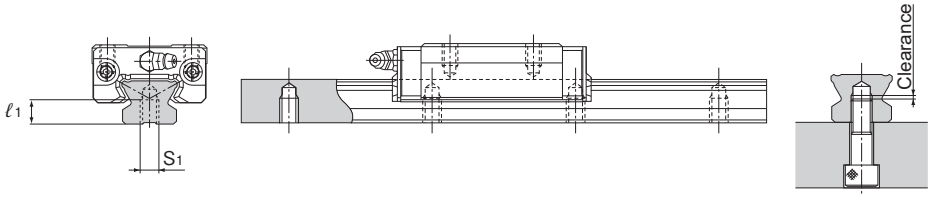

(1) A tapped-hole LM rail type is available only for high accuracy or lower grades.
(2) Determine the bolt length so that a clearance of 2 to 5 mm is secured between the bolt end and the bottom of the tap (effective tap depth). (See figure above.)
(3) For standard pitches of the taps, see Table1 on A1-114.

Table2 Dimensions of the LM Rail Tap Unit: mm

Model No.	S_1	Effective tap depth ℓ_1
SSR 15X	M5	7
SSR 20X	M6	9
SSR 25X	M6	10
SSR 30X	M8	14
SSR 35X	M8	16

Model number coding

SSR20X W2UU +1200LH K

Symbol for tapped-hole LM rail t

SVR/SVS

Caged Ball LM Guide Ultra-heavy Load Type for Machine Tools Model SVR/SVS

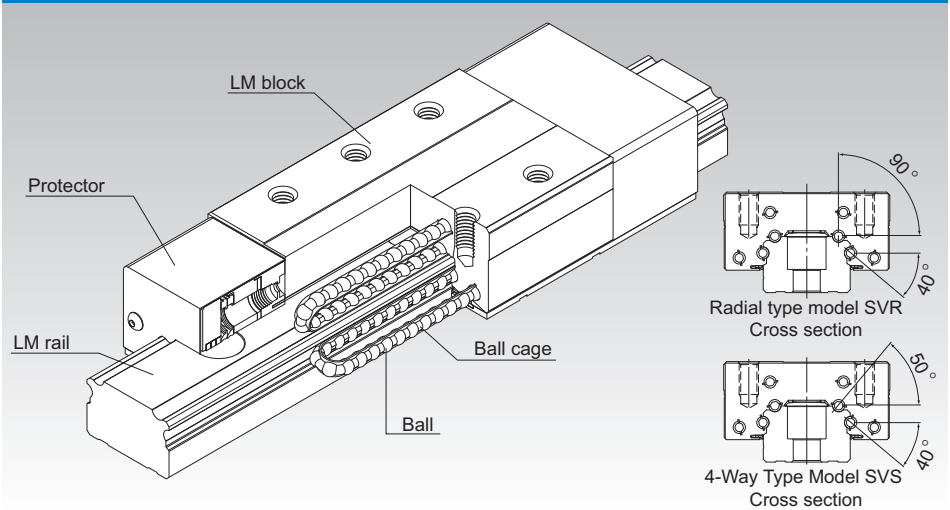

*For the Ball Cage, see A1-88.

Point of Selection A1-10

Point of Design A1-434

Options A1-457

Model No. A1-522

Precautions on Use A1-528

Accessories for Lubrication A24-1

Mounting Procedure and Maintenance B1-89

Equivalent moment factor A1-43

Rated Loads in All Directions A1-58

Equivalent factor in each direction A1-60

Radial Clearance A1-70

Accuracy Standards A1-76

Shoulder Height of the Mounting Base and the Corner Radius A1-444

Permissible Error of the Mounting Surface A1-450

Dimensions of Each Model with an Option Attached A1-470

Structure and Features

Models SVR/SVS have especially high rigidity and load carrying capacity among the Caged Ball LM Guide series. In addition, these models maintain the LM Guide performance and achieve high reliability through the strengthening of the dust proof performance with a broad range of options that take into account the service environments of machine tools, etc.

*Since models SVR/SVS have very high rigidity, their structures are easily affected by the misalignment of the mounting surface and the installation error. If affected by these factors, their service life may be shortened or their motion may be disrupted. When considering using these models, contact THK.

[Super Heavy Load, Increased Damping]

The raceway of models SVR/SVS adopts a circular-arc deep groove with a curvature approximate to the ball diameter. Since the ball contact area increases as the applied load increases, a large load carrying capacity is achieved and damping is also improved.

[Increased Dust-proof Performance]

The foreign material removal function is improved with a newly developed protector to strengthen the dust-proof performance. In addition, use of a side scraper reduces the entrance of foreign material into the LM block, thus maintaining the LM Guide performance for a long period even in adverse environments.

[High Rigidity]

Models SVR/SVS achieve the highest rigidity among the Caged Ball LM Guide series.
Both the radial type SVR and the 4-way equal load type SVS are available for the same size. Depending on the intended use, you can select either type.

[Wide Array of Options]

Various options are available, including end seal, inner seal, side seal, Laminated Contact Scraper LaCS, protector, side scraper and Cap GC, to respond to diversified service environments.

[Models SVR/SVS Contamination Protection Performance Evaluation]

Models SVR/SVS maintain their performance under severe conditions with fine particles or liquid contamination.

Test conditions

Item		Description
Tested model		SVS45LR1TTHHYYC1+2880LP×2set
Maximum speed		200m/min
Stroke		2500mm
Grease used		THK AFB-LF Grease
Environmental conditions	Foreign material	Type: Metal powder (Atomized Powder) (particle diameter: 125 μm or less)
		Amount: 0.4 g/20 min
	Coolant	Water-soluble coolant
		Amount: 0.2 cc/10 s

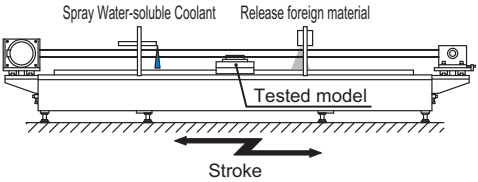

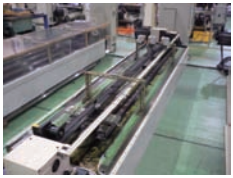

Test equipment

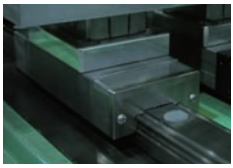

Tested model

Models SVR/SVS with option (TTHHYY option)

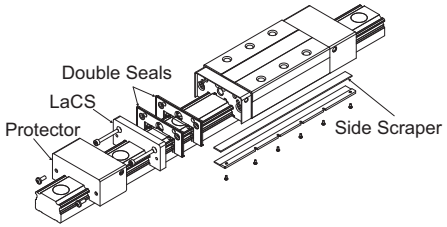

TTHHYY Option:

- Double Seals
- Laminated Contact Scraper LaCS
- Protector
- Side Scraper

Test Result

After traveling 3000 km

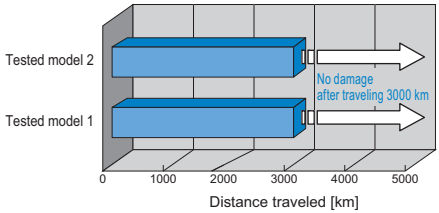

Models SVR/SVS maintain their performance even after traveling 3000 km under severe conditions with exposure to coolant and contamination.

Types and Features

Models SVR-R/SVS-R

Specification Table⇒A1-122/A1-124

With this type, the LM block has a smaller width (W) and tapped holes.
Used in places where the space for table width is limited.

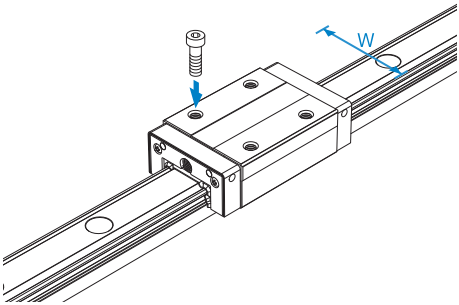

Models SVR-LR/SVS-LR

Specification Table⇒A1-122/A1-124

The LM block has the same cross-sectional shape as models SVR/SVS-R, but has a longer overall LM block length (L) and a greater rated load.

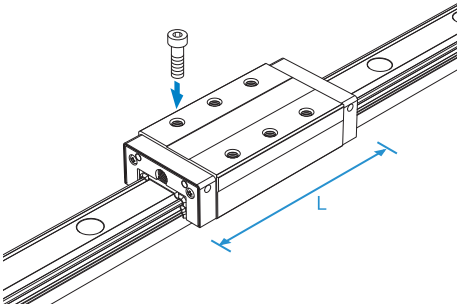

Models SVR-C/SVS-C

Specification Table⇒A1-126/A1-128

The flange of the LM block has tapped holes. Can be mounted from the top or the bottom.
Can also be used in places where the table cannot have through holes for mounting bolts.

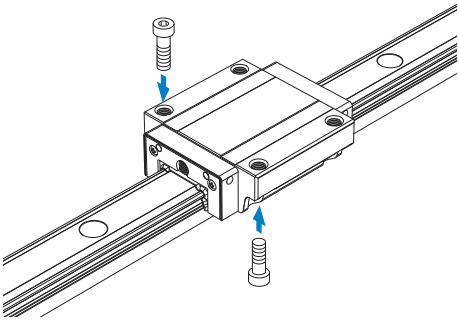

Models SVR-LC/SVS-LC

Specification Table⇒A1-126/A1-128

The LM block has the same cross-sectional shape as models SVR/SVS-C, but has a longer overall LM block length (L) and a greater rated load.

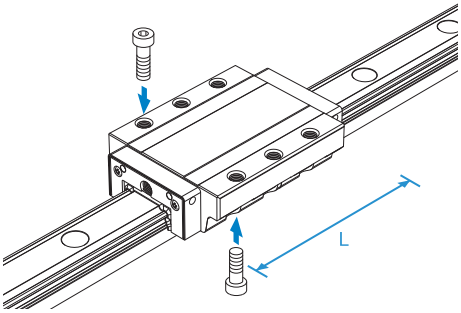

Models SVR-RH/SVS-RH

Specification Table⇒A1-130

The dimensions are almost the same as that of LM Guide models SHS and HSR, and the LM block has tapped holes.

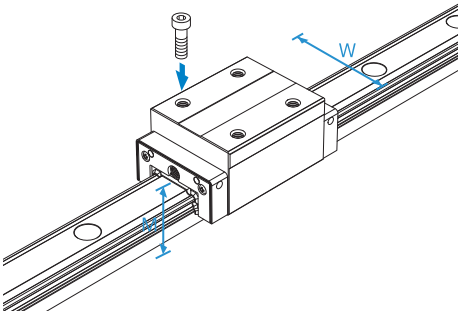

Models SVR-LRH/SVS-LRH

Specification Table⇒A1-130

The LM block has the same cross-sectional shape as models SVR/SVS-RH, but has a longer overall LM block length (L) and a greater rated load.

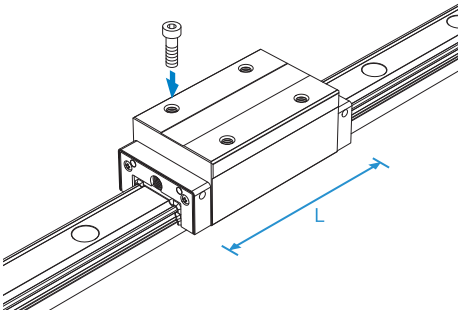

Models SVR-CH/SVS-CH

Specification Table⇒A1-132

The dimensions are similar to that of LM Guide models SHS and HSR, and the flange of the LM block has tapped holes.

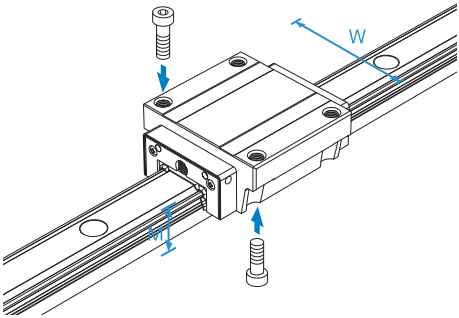

Models SVR-LCH/SVS-LCH

Specification Table⇒A1-132

The LM block has the same cross-sectional shape as models SVR/SVS-CH, but has a longer overall LM block length (L) and a greater rated load.

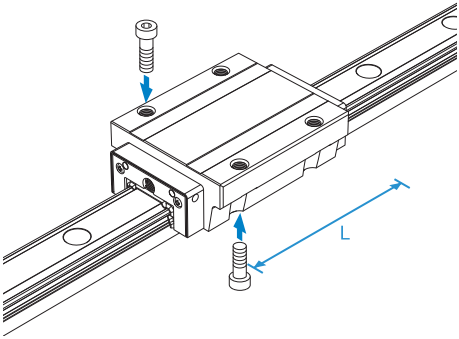

Models SVR-R and SVR-LR

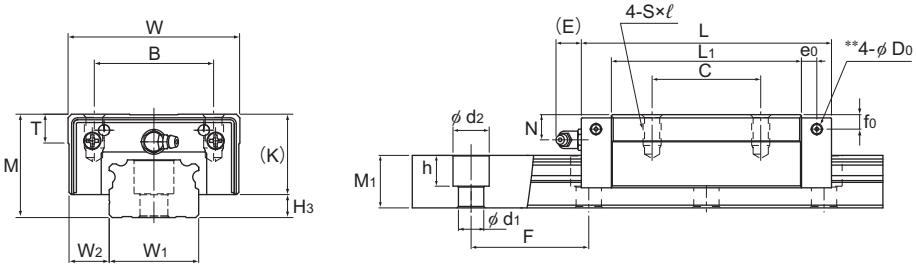

SVR-R

Model No.	Outer dimensions			LM block dimensions													
	Height M	Width W	Length L	B	C	S×ℓ	L_1	T	K	N	f_0	E	e_0	D_0	Grease nipple	H_3
SVR 25R SVR 25LR	31	50	82.8 102	32	35 50	M6×8	61.4 80.6	9.7	25.5	7.8	5.1	12	4.5	3.9	B-M6F	5.5
SVR 30R SVR 30LR	38	60	98 120.5	40	40 60	M8×10	72.1 94.6	9.7	31	10.3	7	12	6.5	3.9	B-M6F	7
SVR 35R SVR 35LR	44	70	109.5 135	50	50 72	M8×12	79 104.5	11.7	35	12.1	8	12	6	5.2	B-M6F	9
SVR 45R SVR 45LR	52	86	138.2 171	60	60 80	M10×17	105 137.8	14.7	40.4	13.9	8	16	8.5	5.2	B-PT1/8	11.6
SVR 55R SVR 55LR	63	100	163.3 200.5	65	75 95	M12×18	123.6 160.8	17.7	49	16.6	10	16	10	5.2	B-PT1/8	14
SVR 65R SVR 65LR	75	126	186 246	76	70 110	M16×20	143.6 203.6	21.6	60	19	15	16	8.7	8.2	B-PT1/8	15

Model number coding

SVR45 LR 2 QZ TTHH C0 +1200L P T -Ⅱ

- SVR45: Model No.
- LR: Type of LM block
- 2: No. of LM blocks used on the same rail
- QZ: With QZ Lubricator
- TTHH: Contamination protection accessory symbol (*1)
- C0: Radial clearance symbol (*2)
  - Normal (No symbol)
  - Light preload (C1)
  - Medium preload (C0)
- +1200L: LM rail length (in mm)
- P: Accuracy symbol (*3)
  - Normal grade (No Symbol)/High accuracy grade (H)
  - Precision grade (P)/Super precision grade (SP)
  - Ultra precision grade (UP)
- T: Symbol for LM rail jointed use
- -Ⅱ: Symbol for No. of rails used on the same plane (*4)

(*1) See contamination protection accessory on A1-494. (*2) See A1-70. (*3) See A1-76. (*4) See A1-13.

Note) This model number indicates that an LM block and an LM rail constitute one set (i.e., the required number of sets when 2 rails are used in parallel is 2).
Those models equipped with QZ Lubricator cannot have a grease nipple. When desiring a grease nipple for a model attached with QZ, contact THK.

Download data by searching for the corresponding model number on the Technical Support site. https://tech.thk.com

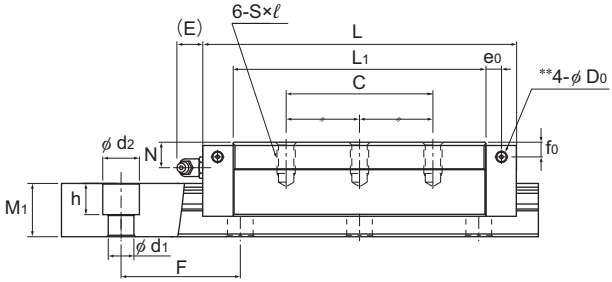

SVR-LR

Unit: mm

	LM rail dimensions						Basic load rating		Static permissible moment kN-m*					Mass	
	Width		Height	Pitch		Length	C	C_0	M_A		M_B		M_C	LM block	LM rail
	W_1 0 -0.05	W_2	M_1	F	$d_1 \times d_2 \times h$	Max*	kN	kN	1 block	Double blocks	1 block	Double blocks	1 block	kg	kg/m
	25	12.5	17	40	6×9.5×8.5	3000	48.2 57	68.1 86.3	0.602 0.944	3.02 4.67	0.365 0.57	1.83 2.81	0.71 0.9	0.4 0.5	2.9
	28	16	21	80	7×11×9	3000	67.9 84	91.6 124	0.907 1.64	4.85 7.92	0.552 0.991	2.94 4.76	1.08 1.47	0.7 0.9	4.2
	34	18	24.5	80	9×14×12	3000	89.6 112	116 160	1.26 2.35	6.91 11.5	0.769 1.42	4.2 6.91	1.64 2.26	1 1.3	6.0
	45	20.5	29	105	14×20×17	3090	138 161	186 233	2.76 4.52	13.7 22.1	1.67 2.74	8.3 13.4	3.5 4.6	1.8 2.3	9.5
	53	23.5	36.5	120	16×23×20	3060	177 214	235 309	3.99 6.8	20.6 32.7	2.42 4.1	12.4 19.7	5.07 6.67	3.3 4.3	14
	63	31.5	43	150	18×26×22	3000	271 339	352 484	7.26 13.5	34.9 62.6	4.4 8.14	21.1 37.6	9 12.4	6.0 8.5	19.6

Note) Pilot holes for side nipples** are not drilled through in order to prevent foreign material from entering the product.
THK will mount grease nipples per your request. Therefore, do not use the side nipple pilot holes** for purposes other than mounting a grease nipple.
In case of oil lubrication, be sure to let THK know the mounting orientation and the exact position in each LM block where the piping joint should be attached.
For the mounting orientation and the lubrication, see A**1-12** and A**24-2**, respectively.
The maximum length under "Length*" indicates the standard maximum length of an LM rail. (See A**1-134** .)
Static permissible moment*: 1 block: static permissible moment value with 1 LM block
Double blocks: static permissible moment value with 2 blocks closely contacting with each other

Options⇒A1-457

Models SVS-R and SVS-LR

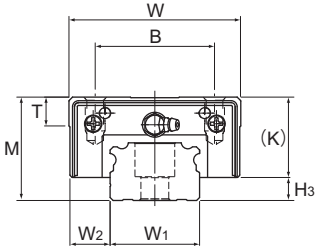

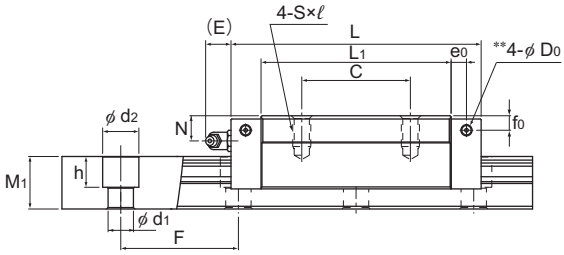

SVS-R

Model No.	Outer dimensions			LM block dimensions													
	Height	Width	Length													Grease nipple	
	M	W	L	B	C	S×ℓ	L_1	T	K	N	f_0	E	e_0	D_0			H_3
SVS 25R SVS 25LR	31	50	82.8 102	32	35 50	M6×8	61.4 80.6	9.7	25.5	7.8	5.1	12	4.5	3.9		B-M6F	5.5
SVS 30R SVS 30LR	38	60	98 120.5	40	40 60	M8×10	72.1 94.6	9.7	31	10.3	7	12	6.5	3.9		B-M6F	7
SVS 35R SVS 35LR	44	70	109.5 135	50	50 72	M8×12	79 104.5	11.7	35	12.1	8	12	6	5.2		B-M6F	9
SVS 45R SVS 45LR	52	86	138.2 171	60	60 80	M10×17	105 137.8	14.7	40.4	13.9	8	16	8.5	5.2		B-PT1/8	11.6
SVS 55R SVS 55LR	63	100	163.3 200.5	65	75 95	M12×18	123.6 160.8	17.7	49	16.6	10	16	10	5.2		B-PT1/8	14
SVS 65R SVS 65LR	75	126	186 246	76	70 110	M16×20	143.6 203.6	21.6	60	19	15	16	8.7	8.2		B-PT1/8	15

Model number coding

SVS45 LR 2 QZ TTHH C0 +1200L P T -Ⅱ

- SVS45: Model No.
- LR: Type of LM block
- 2: No. of LM blocks used on the same rail
- QZ: With QZ Lubricator
- TTHH: Contamination protection accessory symbol (*1)
- C0: Radial clearance symbol (*2) — Normal (No symbol), Light preload (C1), Medium preload (C0)
- +1200L: LM rail length (in mm)
- P: Accuracy symbol (*3) — Normal grade (No Symbol)/High accuracy grade (H), Precision grade (P)/Super precision grade (SP), Ultra precision grade (UP)
- T: Symbol for LM rail jointed use
- -Ⅱ: Symbol for No. of rails used on the same plane (*4)

(*1) See contamination protection accessory on A1-494. (*2) See A1-70. (*3) See A1-76. (*4) See A1-13.

Note) This model number indicates that an LM block and an LM rail constitute one set (i.e., the required number of sets when 2 rails are used in parallel is 2).
Those models equipped with QZ Lubricator cannot have a grease nipple. When desiring a grease nipple for a model attached with QZ, contact THK.

Download data by searching for the corresponding model number on the Technical Support site. https://tech.thk.com

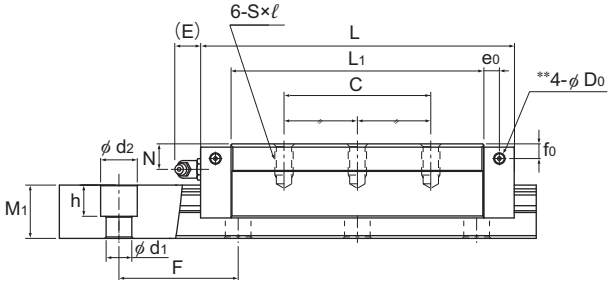

SVS-LR

Unit: mm

	LM rail dimensions						Basic load rating		Static permissible moment kN-m*					Mass	
	Width		Height	Pitch		Length	C	C_0	M_A		M_B		M_C	LM block	LM rail
	W_1 0 -0.05	W_2	M_1	F	$d_1 \times d_2 \times h$	Max*	kN	kN	1 block	Double blocks	1 block	Double blocks	1 block	kg	kg/m
	25	12.5	17	40	6×9.5×8.5	3000	37 43.7	52.2 66.1	0.479 0.75	2.41 3.71	0.443 0.693	2.23 3.43	0.525 0.665	0.4 0.5	2.9
	28	16	21	80	7×11×9	3000	52 64.4	70.1 95.2	0.722 1.31	3.86 6.3	0.667 1.21	3.58 5.83	0.798 1.08	0.7 0.9	4.2
	34	18	24.5	80	9×14×12	3000	68.6 86.1	88.6 123	1 1.88	5.49 9.15	0.927 1.73	5.09 8.46	1.2 1.67	1 1.3	6.0
	45	20.5	29	105	14×20×17	3090	105 123	142 178	2.19 3.58	10.9 17.5	2.02 3.31	10.1 16.2	2.6 3.44	1.8 2.3	9.5
	53	23.5	36.5	120	16×23×20	3060	136 164	180 237	3.17 5.4	16.4 26	2.93 4.99	15.1 24	3.76 4.96	3.3 4.3	14
	63	31.5	43	150	18×26×22	3000	208 260	269 370	5.76 10.7	27.7 49.6	5.33 9.88	25.6 45.8	6.66 9.16	6.0 8.5	19.6

Note) Pilot holes for side nipples** are not drilled through in order to prevent foreign material from entering the product.
THK will mount grease nipples per your request. Therefore, do not use the side nipple pilot holes** for purposes other than mounting a grease nipple.
In case of oil lubrication, be sure to let THK know the mounting orientation and the exact position in each LM block where the piping joint should be attached.
For the mounting orientation and the lubrication, see A1-12 and A24-2, respectively.
The maximum length under "Length*" indicates the standard maximum length of an LM rail. (See A1-134 .)
Static permissible moment*: 1 block: static permissible moment value with 1 LM block
Double blocks: static permissible moment value with 2 blocks closely contacting with each other

Options⇒A1-457

Models SVR-C and SVR-LC

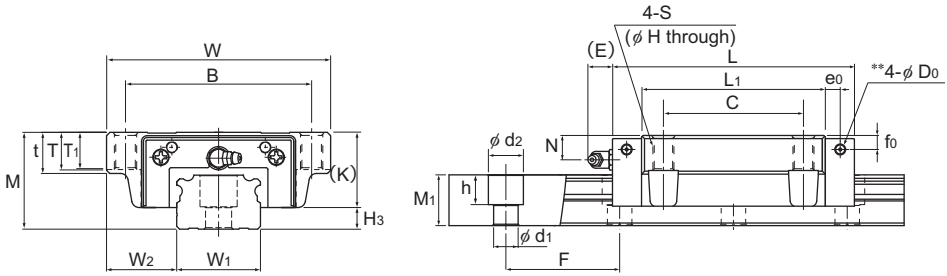

SVR-C

Model No.	Outer dimensions			LM block dimensions															
	Height M	Width W	Length L	B	C	S	H	L_1	t	T	T_1	K	N	f_0	E	e_0	D_0	Grease nipple	H_3
SVR 25C SVR 25LC	31	72	82.8 102	59	45	M8	6.8	61.4 80.6	16	14.8	12	25.5	7.8	5.1	12	4.5	3.9	B-M6F	5.5
SVR 30C SVR 30LC	38	90	98 120.5	72	52	M10	8.5	72.1 94.6	18.1	16.9	14	31	10.3	7	12	6.5	3.9	B-M6F	7
SVR 35C SVR 35LC	44	100	109.5 135	82	62	M10	8.5	79 104.5	20.1	18.9	16	35	12.1	8	12	6	5.2	B-M6F	9
SVR 45C SVR 45LC	52	120	138.2 171	100	80	M12	10.5	105 137.8	22.1	20.6	20	40.4	13.9	8	16	8.5	5.2	B-PT1/8	11.6
SVR 55C SVR 55LC	63	140	163.3 200.5	116	95	M14	12.5	123.6 160.8	24	22.5	22	49	16.6	10	16	10	5.2	B-PT1/8	14
SVR 65C SVR 65LC	75	170	186 246	142	110	M16	14.5	143.6 203.6	28	26	25	60	19	15	16	8.7	8.2	B-PT1/8	15

Model number coding

SVR45 LC 2 QZ TTHH C0 +1200L P T -Ⅱ

- SVR45: Model No.
- LC: Type of LM block
- 2: No. of LM blocks used on the same rail
- QZ: With QZ Lubricator
- TTHH: Contamination protection accessory symbol (*1)
- C0: Radial clearance symbol (*2) — Normal (No symbol), Light preload (C1), Medium preload (C0)
- +1200L: LM rail length (in mm)
- P: Accuracy symbol (*3) — Normal grade (No Symbol)/High accuracy grade (H), Precision grade (P)/Super precision grade (SP), Ultra precision grade (UP)
- T: Symbol for LM rail jointed use
- -Ⅱ: Symbol for No. of rails used on the same plane (*4)

(*1) See contamination protection accessory on A1-494. (*2) See A1-70. (*3) See A1-76. (*4) See A1-13.

Note) This model number indicates that an LM block and an LM rail constitute one set (i.e., the required number of sets when 2 rails are used in parallel is 2).
Those models equipped with QZ Lubricator cannot have a grease nipple. When desiring a grease nipple for a model attached with QZ, contact THK.

Download data by searching for the corresponding model number on the Technical Support site. https://tech.thk.com

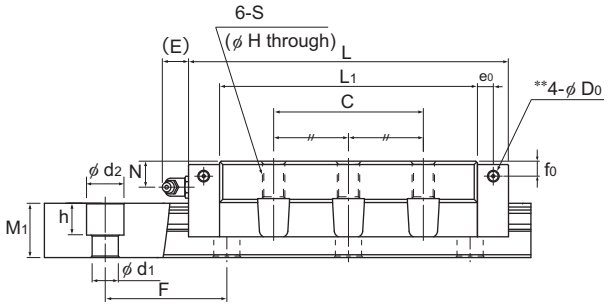

SVR-LC

Unit: mm

	LM rail dimensions						Basic load rating		Static permissible moment kN-m*					Mass	
	Width		Height	Pitch		Length	C	C_0	M_A		M_B		M_C	LM block	LM rail
	W_1 0 -0.05	W_2	M_1	F	$d_1 \times d_2 \times h$	Max*	kN	kN	1 block	Double blocks	1 block	Double blocks	1 block	kg	kg/m
	25	23.5	17	40	6×9.5×8.5	3000	48.2 57	68.1 86.3	0.602 0.944	3.02 4.67	0.365 0.57	1.83 2.81	0.71 0.9	0.6 0.8	2.9
	28	31	21	80	7×11×9	3000	67.9 84	91.6 124	0.907 1.64	4.85 7.92	0.552 0.991	2.94 4.76	1.08 1.47	1.1 1.5	4.2
	34	33	24.5	80	9×14×12	3000	89.6 112	116 160	1.26 2.35	6.91 11.5	0.769 1.42	4.2 6.91	1.64 2.26	1.6 2	6.0
	45	37.5	29	105	14×20×17	3090	138 161	186 233	2.76 4.52	13.7 22.1	1.67 2.74	8.3 13.4	3.5 4.6	2.7 3.6	9.5
	53	43.5	36.5	120	16×23×20	3060	177 214	235 309	3.99 6.8	20.6 32.7	2.42 4.1	12.4 19.7	5.07 6.67	4.5 5.9	14
	63	53.5	43	150	18×26×22	3000	271 339	352 484	7.26 13.5	34.9 62.6	4.4 8.14	21.1 37.6	9 12.4	7.8 11.0	19.6

Note) Pilot holes for side nipples** are not drilled through in order to prevent foreign material from entering the product.
THK will mount grease nipples per your request. Therefore, do not use the side nipple pilot holes** for purposes other than mounting a grease nipple.
In case of oil lubrication, be sure to let THK know the mounting orientation and the exact position in each LM block where the piping joint should be attached.
For the mounting orientation and the lubrication, see A1-12 and A24-2, respectively.
The maximum length under "Length*" indicates the standard maximum length of an LM rail. (See A1-134 .)
Static permissible moment*: 1 block: static permissible moment value with 1 LM block
Double blocks: static permissible moment value with 2 blocks closely contacting with each other

Options⇒A1-457

Models SVS-C and SVS-LC

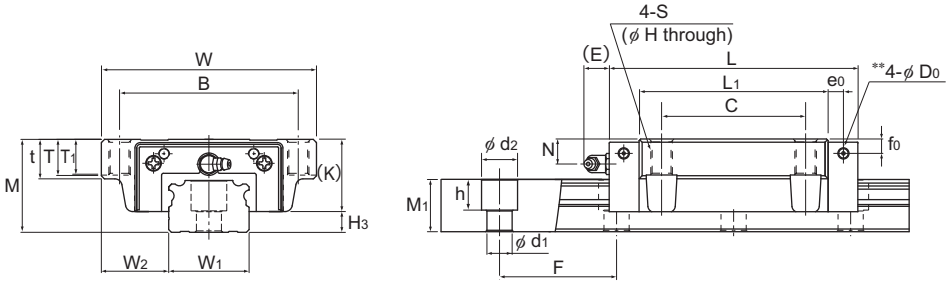

SVS-C

Model No.	Outer dimensions			LM block dimensions															
	Height M	Width W	Length L	B	C	S	H	L_1	t	T	T_1	K	N	f_0	E	e_0	D_0	Grease nipple	H_3
SVS 25C SVS 25LC	31	72	82.8 102	59	45	M8	6.8	61.4 80.6	16	14.8	12	25.5	7.8	5.1	12	4.5	3.9	B-M6F	5.5
SVS 30C SVS 30LC	38	90	98 120.5	72	52	M10	8.5	72.1 94.6	18.1	16.9	14	31	10.3	7	12	6.5	3.9	B-M6F	7
SVS 35C SVS 35LC	44	100	109.5 135	82	62	M10	8.5	79 104.5	20.1	18.9	16	35	12.1	8	12	6	5.2	B-M6F	9
SVS 45C SVS 45LC	52	120	138.2 171	100	80	M12	10.5	105 137.8	22.1	20.6	20	40.4	13.9	8	16	8.5	5.2	B-PT1/8	11.6
SVS 55C SVS 55LC	63	140	163.3 200.5	116	95	M14	12.5	123.6 160.8	24	22.5	22	49	16.6	10	16	10	5.2	B-PT1/8	14
SVS 65C SVS 65LC	75	170	186 246	142	110	M16	14.5	143.6 203.6	28	26	25	60	19	15	16	8.7	8.2	B-PT1/8	15

Model number coding

SVS45 LC 2 QZ TTHH C0 +1200L P T -Ⅱ

- SVS45: Model No.
- LC: Type of LM block
- 2: No. of LM blocks used on the same rail
- QZ: With QZ Lubricator
- TTHH: Contamination protection accessory symbol (*1)
- C0: Radial clearance symbol (*2) — Normal (No symbol), Light preload (C1), Medium preload (C0)
- +1200L: LM rail length (in mm)
- P: Accuracy symbol (*3) — Normal grade (No Symbol)/High accuracy grade (H), Precision grade (P)/Super precision grade (SP), Ultra precision grade (UP)
- T: Symbol for LM rail jointed use
- -Ⅱ: Symbol for No. of rails used on the same plane (*4)

(*1) See contamination protection accessory on A1-494. (*2) See A1-70. (*3) See A1-76. (*4) See A1-13.

Note) This model number indicates that an LM block and an LM rail constitute one set (i.e., the required number of sets when 2 rails are used in parallel is 2).
Those models equipped with QZ Lubricator cannot have a grease nipple. When desiring a grease nipple for a model attached with QZ, contact THK.

Download data by searching for the corresponding model number on the Technical Support site. https://tech.thk.com

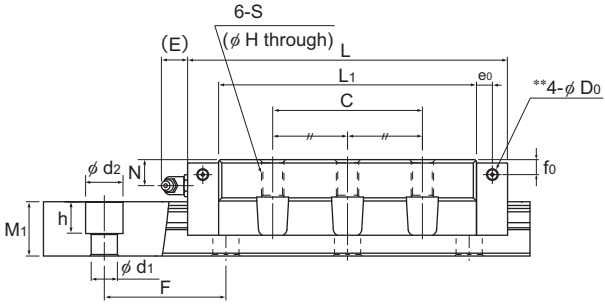

SVS-LC

Unit: mm

	LM rail dimensions						Basic load rating		Static permissible moment kN-m*					Mass	
	Width		Height	Pitch		Length	C	C_0	M_A		M_B		M_C	LM block	LM rail
	W_1 0 -0.05	W_2	M_1	F	$d_1 \times d_2 \times h$	Max*	kN	kN	1 block	Double blocks	1 block	Double blocks	1 block	kg	kg/m
	25	23.5	17	40	6×9.5×8.5	3000	37 43.7	52.2 66.1	0.479 0.75	2.41 3.71	0.443 0.693	2.23 3.43	0.525 0.665	0.6 0.8	2.9
	28	31	21	80	7×11×9	3000	52 64.4	70.1 95.2	0.722 1.31	3.86 6.3	0.667 1.21	3.58 5.83	0.798 1.08	1.1 1.5	4.2
	34	33	24.5	80	9×14×12	3000	68.6 86.1	88.6 123	1 1.88	5.49 9.15	0.927 1.73	5.09 8.46	1.2 1.67	1.6 2	6.0
	45	37.5	29	105	14×20×17	3090	105 123	142 178	2.19 3.58	10.9 17.5	2.02 3.31	10.1 16.2	2.6 3.44	2.7 3.6	9.5
	53	43.5	36.5	120	16×23×20	3060	136 164	180 237	3.17 5.4	16.4 26	2.93 4.99	15.1 24	3.76 4.96	4.5 5.9	14
	63	53.5	43	150	18×26×22	3000	208 260	269 370	5.76 10.7	27.7 49.6	5.33 9.88	25.6 45.8	6.66 9.16	7.8 11.0	19.6

Note) Pilot holes for side nipples** are not drilled through in order to prevent foreign material from entering the product.
THK will mount grease nipples per your request. Therefore, do not use the side nipple pilot holes** for purposes other than mounting a grease nipple.
In case of oil lubrication, be sure to let THK know the mounting orientation and the exact position in each LM block where the piping joint should be attached.
For the mounting orientation and the lubrication, see A1-12 and A24-2, respectively.
The maximum length under "Length*" indicates the standard maximum length of an LM rail. (See A1-134 .)
Static permissible moment*: 1 block: static permissible moment value with 1 LM block
Double blocks: static permissible moment value with 2 blocks closely contacting with each other

Options⇒A1-457

Models SVR-RH, SVR-LRH, SVS-RH and SVS-LRH

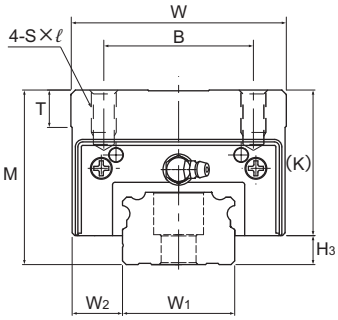

Model No.	Outer dimensions			LM block dimensions													
	Height M	Width W	Length L	B	C	S×ℓ	L_1	T	K	N	f_0	E	e_0	D_0	Grease nipple	H_3
SVR 35RH SVS 35RH	55	70	109.5	50	50	M8×12	79	11.7	46	23.1	19	12	6	5.2	B-M6F	9
SVR 35LRH SVS 35LRH	55	70	135	50	72	M8×12	104.5	11.7	46	23.1	19	12	6	5.2	B-M6F	9
SVR 45RH SVS 45RH	70	86	138.2	60	60	M10×17	105	14.7	58.4	31.9	26	16	8.5	5.2	B-PT1/8	11.6
SVR 45LRH SVS 45LRH	70	86	171	60	80	M10×17	137.8	14.7	58.4	31.9	26	16	8.5	5.2	B-PT1/8	11.6
SVR 55RH SVS 55RH	80	100	163.3	75	75	M12×18	123.6	17.7	66	33.6	27	16	10	5.2	B-PT1/8	14
SVR 55LRH SVS 55LRH	80	100	200.5	75	95	M12×18	160.8	17.7	66	33.6	27	16	10	5.2	B-PT1/8	14

Model number coding

SVR35 RH 2 QZ TTHH C0 +920L H T -Ⅱ

- SVR35: Model No.
- RH: Type of LM block
- 2: No. of LM blocks used on the same rail
- QZ: With QZ Lubricator
- TTHH: Contamination protection accessory symbol (*1)
- C0: Radial clearance symbol (*2) — Normal (No symbol), Light preload (C1), Medium preload (C0)
- +920L: LM rail length (in mm)
- H: Accuracy symbol (*3) — Normal grade (No Symbol)/High accuracy grade (H), Precision grade (P)/Super precision grade (SP), Ultra precision grade (UP)
- T: Symbol for LM rail jointed use
- -Ⅱ: Symbol for No. of rails used on the same plane (*4)

(*1) See contamination protection accessory on A1-494. (*2) See A1-70. (*3) See A1-76. (*4) See A1-13.

Note) This model number indicates that an LM block and an LM rail constitute one set (i.e., the required number of sets when 2 rails are used in parallel is 2).
Those models equipped with QZ Lubricator cannot have a grease nipple. When desiring a grease nipple for a model attached with QZ, contact THK.

Download data by searching for the corresponding model number on the Technical Support site. https://tech.thk.com

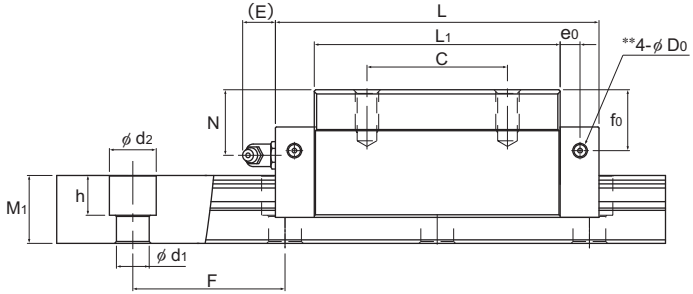

Unit: mm

	LM rail dimensions						Basic load rating		Static permissible moment kN-m*					Mass	
	Width		Height	Pitch		Length	C	C_0	M_A		M_B		M_C	LM block	LM rail
	W_1 0 -0.05	W_2	M_1	F	$d_1 \times d_2 \times h$	Max*	kN	kN	1 block	Double blocks	1 block	Double blocks	1 block	kg	kg/m
	34	18	24.5	80	9×14×12	3000	89.6 68.6	116 88.6	1.26 1	6.91 5.49	0.769 0.927	4.2 5.09	1.64 1.2	1.5	6.0
	34	18	24.5	80	9×14×12	3000	112 86.1	160 123	2.35 1.88	11.5 9.15	1.42 1.73	6.91 8.46	2.26 1.67	2	6.0
	45	20.5	29	105	14×20×17	3090	138 105	186 142	2.76 2.19	13.7 10.9	1.67 2.02	8.3 10.1	3.5 2.6	3.1	9.5
	45	20.5	29	105	14×20×17	3090	161 123	233 178	4.52 3.58	22.1 17.5	2.74 3.31	13.4 16.2	4.6 3.44	4.1	9.5
	53	23.5	36.5	120	16×23×20	3060	177 136	235 180	3.99 3.17	20.6 16.4	2.42 2.93	12.4 15.1	5.07 3.76	4.7	14
	53	23.5	36.5	120	16×23×20	3060	214 164	309 237	6.8 5.4	32.7 26	4.1 4.99	19.7 24	6.67 4.96	6.2	14

Note) Pilot holes for side nipples** are not drilled through in order to prevent foreign material from entering the product.
THK will mount grease nipples per your request. Therefore, do not use the side nipple pilot holes** for purposes other than mounting a grease nipple.
In case of oil lubrication, be sure to let THK know the mounting orientation and the exact position in each LM block where the piping joint should be attached.
For the mounting orientation and the lubrication, see A1-12 and A24-2, respectively.
The maximum length under "Length*" indicates the standard maximum length of an LM rail. (See A1-134 .)
Static permissible moment*: 1 block: static permissible moment value with 1 LM block
Double blocks: static permissible moment value with 2 blocks closely contacting with each other

Options⇒A1-457

Models SVR-CH, SVR-LCH, SVS-CH and SVS-LCH

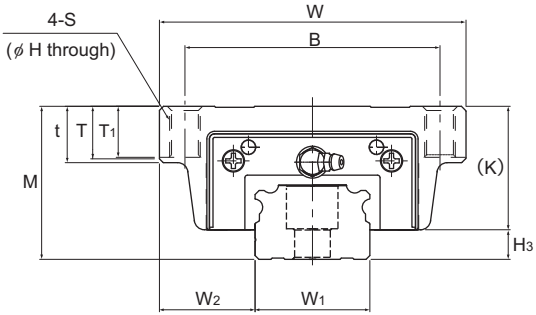

Model No.	Outer dimensions			LM block dimensions															
	Height M	Width W	Length L	B	C	S	H	L_1	t	T	T_1	K	N	f_0	E	e_0	D_0	Grease nipple	H_3
SVR 35CH SVS 35CH	48	100	109.5	82	62	M10	8.5	79	20	19	16	39	16.1	12	12	6	5.2	B-M6F	9
SVR 35LCH SVS 35LCH	48	100	135	82	62	M10	8.5	104.5	20	19	16	39	16.1	12	12	6	5.2	B-M6F	9
SVR 45CH SVS 45CH	60	120	138.2	100	80	M12	10.5	105	22	20.5	20	48.4	21.9	16	16	8.5	5.2	B-PT1/8	11.6
SVR 45LCH SVS 45LCH	60	120	171	100	80	M12	10.5	137.8	22	20.5	20	48.4	21.9	16	16	8.5	5.2	B-PT1/8	11.6
SVR 55CH SVS 55CH	70	140	163.3	116	95	M14	12.5	123.6	24	22.5	22	56	23.6	17	16	10	5.2	B-PT1/8	14
SVR 55LCH SVS 55LCH	70	140	200.5	116	95	M14	12.5	160.8	24	22.5	22	56	23.6	17	16	10	5.2	B-PT1/8	14

Model number coding

SVR45 LCH 2 QZ TTHH C0 +1200L P T -Ⅱ

- SVR45: Model No.
- LCH: Type of LM block
- 2: No. of LM blocks used on the same rail
- QZ: With QZ Lubricator
- TTHH: Contamination protection accessory symbol (*1)
- C0: Radial clearance symbol (*2) — Normal (No symbol), Light preload (C1), Medium preload (C0)
- +1200L: LM rail length (in mm)
- P: Accuracy symbol (*3) — Normal grade (No Symbol)/High accuracy grade (H), Precision grade (P)/Super precision grade (SP), Ultra precision grade (UP)
- T: Symbol for LM rail jointed use
- -Ⅱ: Symbol for No. of rails used on the same plane (*4)

(*1) See contamination protection accessory on A1-494. (*2) See A1-70. (*3) See A1-76. (*4) See A1-13.

Note) This model number indicates that an LM block and an LM rail constitute one set (i.e., the required number of sets when 2 rails are used in parallel is 2).
Those models equipped with QZ Lubricator cannot have a grease nipple. When desiring a grease nipple for a model attached with QZ, contact THK.

Download data by searching for the corresponding model number on the Technical Support site. https://tech.thk.com

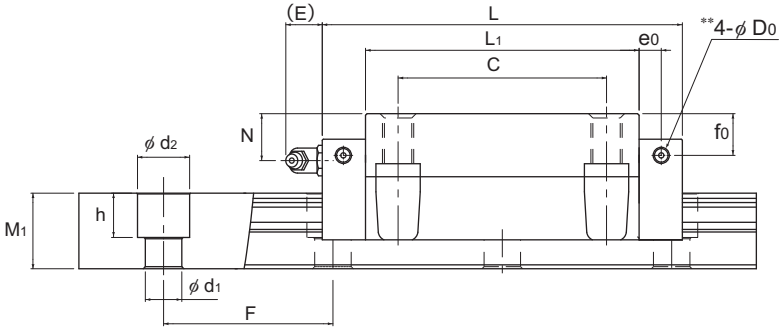

Unit: mm

LM rail dimensions						Basic load rating		Static permissible moment kN-m*					Mass	
Width		Height	Pitch		Length	C	C_0	M_A		M_B		M_C	LM block	LM rail
W_1 0 -0.05	W_2	M_1	F	$d_1 \times d_2 \times h$	Max*	kN	kN	1 block	Double blocks	1 block	Double blocks	1 block	kg	kg/m
34	33	24.5	80	9×14×12	3000	89.6 68.6	116 88.6	1.26 1	6.91 5.49	0.769 0.927	4.2 5.09	1.64 1.2	1.7	6.0
34	33	24.5	80	9×14×12	3000	112 86.1	160 123	2.35 1.88	11.5 9.15	1.42 1.73	6.91 8.46	2.26 1.67	2.2	6.0
45	37.5	29	105	14×20×17	3090	138 105	186 142	2.76 2.19	13.7 10.9	1.67 2.02	8.3 10.1	3.5 2.6	3.3	9.5
45	37.5	29	105	14×20×17	3090	161 123	233 178	4.52 3.58	22.1 17.5	2.74 3.31	13.4 16.2	4.6 3.44	4.3	9.5
53	43.5	36.5	120	16×23×20	3060	177 136	235 180	3.99 3.17	20.6 16.4	2.42 2.93	12.4 15.1	5.07 3.76	5.1	14
53	43.5	36.5	120	16×23×20	3060	214 164	309 237	6.8 5.4	32.7 26	4.1 4.99	19.7 24	6.67 4.96	6.6	14

Note) Pilot holes for side nipples** are not drilled through in order to prevent foreign material from entering the product.
THK will mount grease nipples per your request. Therefore, do not use the side nipple pilot holes** for purposes other than mounting a grease nipple.
In case of oil lubrication, be sure to let THK know the mounting orientation and the exact position in each LM block where the piping joint should be attached.
For the mounting orientation and the lubrication, see A1-12 and A24-2, respectively.
The maximum length under "Length*" indicates the standard maximum length of an LM rail. (See A1-134 .)
Static permissible moment*: 1 block: static permissible moment value with 1 LM block
Double blocks: static permissible moment value with 2 blocks closely contacting with each other

Options⇒A1-457

Standard Length and Maximum Length of the LM Rail

Table1 shows the standard lengths and the maximum lengths of model SVR/SVS variations. If the maximum length of the desired LM rail exceeds them, jointed rails will be used. Contact THK for details.
For the G dimension when a special length is required, we recommend selecting the corresponding G value from the table. The longer the G dimension is, the less stable the G area may become after installation, thus causing an adverse impact to accuracy.

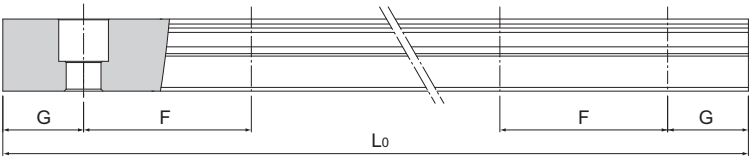

Table1 Standard Length and Maximum Length of the LM Rail for Models SVR/SVS

Unit: mm

Model No.	SVR/SVS 25	SVR/SVS 30	SVR/SVS 35	SVR/SVS 45	SVR/SVS 55	SVR/SVS 65
LM rail standard length (L_o)	230 270 350 390 470 510 590 630 710 750 830 950 990 1070 1110 1190 1230 1310 1350 1430 1470 1550 1590 1710 1830 1950 2070 2190 2310 2430 2470	280 360 440 520 600 680 760 840 920 1000 1080 1160 1240 1320 1400 1480 1560 1640 1720 1800 1880 1960 2040 2200 2360 2520 2680 2840 3000	280 360 440 520 600 680 760 840 920 1000 1080 1160 1240 1320 1400 1480 1560 1640 1720 1800 1880 1960 2040 2200 2360 2520 2680 2840 3000	570 675 780 885 990 1095 1200 1305 1410 1515 1620 1725 1830 1935 2040 2145 2250 2355 2460 2565 2670 2775 2880 2985 3090	780 900 1020 1140 1260 1380 1500 1620 1740 1860 1980 2100 2220 2340 2460 2580 2700 2820 2940 3060	1270 1570 2020 2620
Standard pitch F	40	80	80	105	120	150
G	15	20	20	22.5	30	35
Max length	3000	3000	3000	3090	3060	3000

Note1) The maximum length varies with accuracy grades. Contact THK for details.
Note2) If jointed rails are not allowed and a greater length than the maximum values above is required, contact THK.

SHW

Caged Ball LM Guide Wide Rail Model SHW

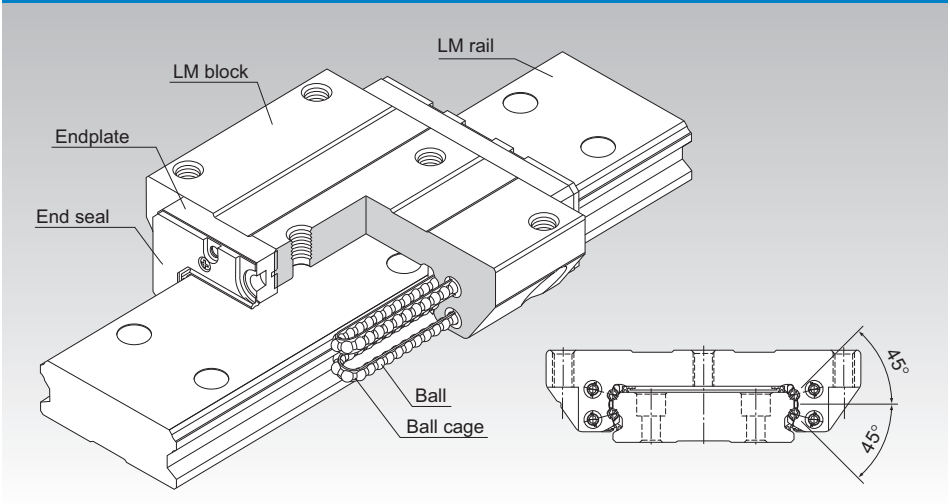

*For the ball cage, see A1-88.

Point of Selection A1-10

Point of Design A1-434

Options A1-457

Model No. A1-522

Precautions on Use A1-528

Accessories for Lubrication A24-1

Mounting Procedure and Maintenance B1-89

Equivalent moment factor A1-43

Rated Loads in All Directions A1-58

Equivalent factor in each direction A1-60

Radial Clearance A1-70

Accuracy Standards A1-76

Shoulder Height of the Mounting Base and the Corner Radius A1-447

Permissible Error of the Mounting Surface A1-451

Dimensions of Each Model with an Option Attached A1-470

Structure and Features

A wide and highly rigid LM Guide that uses ball cages to achieve low noise, long-term maintenance-free operation and high speed.

[Wide, Low Center of Gravity]
Model SHW, which has a wide LM rail and a low center of gravity, is optimal for locations requiring space saving and large M_C moment rigidity.

[4-way Equal Load]
Each row of balls is placed at a contact angle of 45° so that the rated loads applied to the LM block are uniform in the four directions (radial, reverse radial and lateral directions), enabling the LM Guide to be used in all orientations and in extensive applications.

[Self-adjustment Capability]
The self-adjustment capability through front-to-front configuration of THK's unique circular-arc grooves (DF set) enables a mounting error to be absorbed even under a preload, thus to achieve highly accurate, smooth straight motion.

[Low Dust Generation]
Use of ball cages eliminates friction between balls and retains lubricant, thus achieving low dust generation.

Types and Features

Model SHW-CA

Specification Table⇒A1-140

The flange of the LM block has tapped holes.
Can be mounted from the top or the bottom.

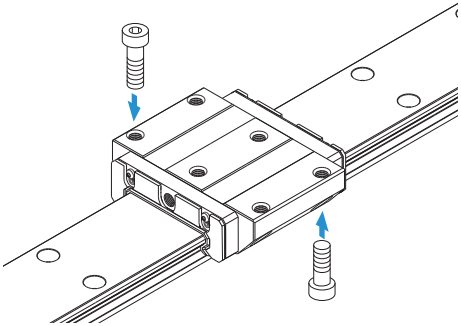

Model SHW-CR

Specification Table⇒A1-142

The LM block has tapped holes.

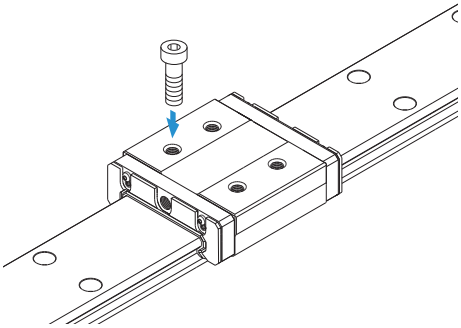

Model SHW-CA

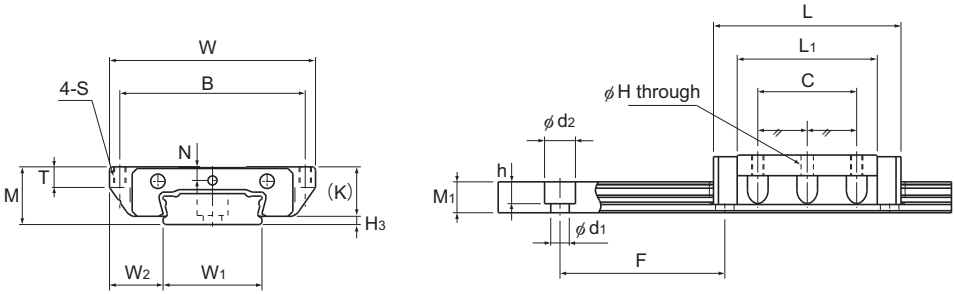

Models SHW12CAM and SHW14CAM

Model No.	Outer dimensions			LM block dimensions								
	Height M	Width W	Length L	B	C	S	H	L_1	T	K	N	H_3
SHW 12CAM	12	40	37	35	18	M3	2.5	27	4	10	2.8	2
SHW 14CAM	14	50	45.5	45	24	M3	2.5	34	5	12	3.3	2
SHW 17CAM	17	60	51	53	26	M4	3.3	38	6	14.5	4	2.5
SHW 21CA	21	68	59	60	29	M5	4.4	43.6	8	17.7	5	3.3
SHW 27CA	27	80	72.8	70	40	M6	5.3	56.6	10	23.5	6	3.5
SHW 35CA	35	120	107	107	60	M8	6.8	83	14	31	7.6	4
SHW 50CA	50	162	141	144	80	M10	8.6	107	18	46	14	4

Note) Symbol M indicates that stainless steel is used in the LM block, LM rail and balls. Those models marked with this symbol are therefore highly resistant to corrosion and environment.

Model number coding

SHW17 CA 2 QZ UU C1 M +580L P M -Ⅱ

- SHW17: Model number
- CA: Type of LM block
- 2: No. of LM blocks used on the same rail
- QZ: With QZ Lubricator
- UU: Contamination protection accessory symbol (*1)
- C1: Radial clearance symbol (*2)
  - Normal (No symbol)
  - Light preload (C1)
  - Medium preload (C0)
- M: Stainless steel LM block
- +580L: LM rail length (in mm)
- P: Accuracy symbol (*3)
  - Normal grade (No Symbol)/High accuracy grade (H)
  - Precision grade (P)/Super precision grade (SP)
  - Ultra precision grade (UP)
- M: Stainless steel LM rail
- -Ⅱ: Symbol for No. of rails used on the same plane (*4)

(*1) See contamination protection accessory on A1-494. (*2) See A1-70. (*3) See A1-76. (*4) See A1-13.

Note) This model number indicates that a single-rail unit constitutes one set. (i.e., required number of sets when 2 rails are used in parallel is 2 at a minimum.)
Those models equipped with QZ Lubricator cannot have a grease nipple. When desiring a grease nipple for a model attached with QZ, contact THK.

Download data by searching for the corresponding model number on the Technical Support site. https://tech.thk.com

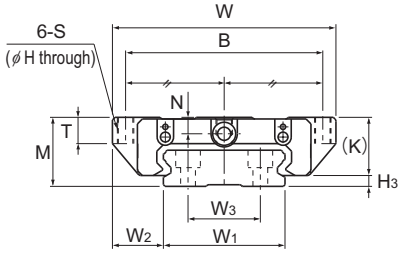

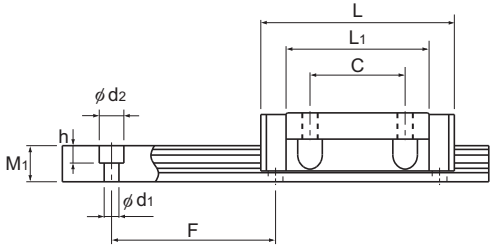

Models SHW17CAM and SHW21 to 50CA

Unit: mm

	LM rail dimensions							Basic load rating		Static permissible moment kN-m*					Mass	
	Width			Height	Pitch		Length*	C	C_0	M_A		M_B		M_C	LM block	LM rail
	W_1 0 -0.05	W_2	W_3	M_1	F	$d_1 \times d_2 \times h$	Max	kN	kN	1 block	Double blocks	1 block	Double blocks	1 block	kg	kg/m
	18	11	—	6.6	40	4.5×7.5×5.3	1230	4.31	5.66	0.0228	0.12	0.0228	0.12	0.0405	0.05	0.8
	24	13	—	7.5	40	4.5×7.5×5.3	1430	7.05	8.98	0.0466	0.236	0.0466	0.236	0.0904	0.1	1.23
	33	13.5	18	8.6	40	4.5×7.5×5.3	1800	7.65	10.18	0.0591	0.298	0.0591	0.298	0.164	0.15	1.9
	37	15.5	22	11	50	4.5×7.5×5.3	3000	8.24	12.8	0.0806	0.434	0.0806	0.434	0.229	0.24	2.9
	42	19	24	15	60	4.5×7.5×5.3	3000	16	22.7	0.187	0.949	0.187	0.949	0.455	0.47	4.5
	69	25.5	40	19	80	7×11×9	3000	35.5	49.2	0.603	3	0.603	3	1.63	1.4	9.6
	90	36	60	24	80	9×14×12	3000	70.2	91.4	1.46	7.37	1.46	7.37	3.97	3.7	15

Note) If a grease nipple is required, indicate “with grease nipple;” if a greasing hole is required, indicate “with a tapped hole for greasing.”
The maximum length under “Length*” indicates the standard maximum length of an LM rail. (See A1-144.)
Static permissible moment*: 1 block: static permissible moment value with 1 LM block
Double blocks: static permissible moment value with 2 blocks closely contacting with each other

Options⇒A1-457

Models SHW-CR and SHW-HR

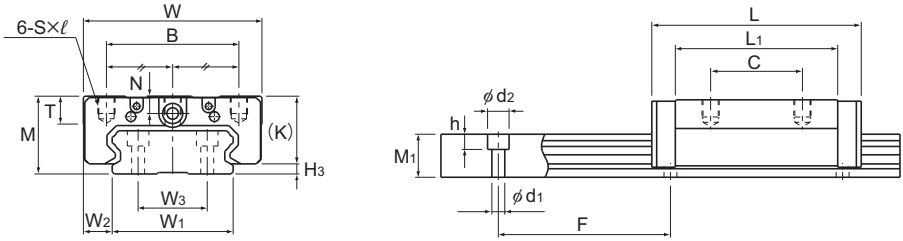

Models SHW27 to 50CR

Model No.	Outer dimensions			LM block dimensions							
	Height M	Width W	Length L	B	C	S×ℓ	L_1	T	K	N	H_3
SHW 12CRM	12	30	37	21	12	M3×3.5	27	4	10	2.8	2
SHW 12HRM	12	30	50.4	21	24	M3×3.5	40.4	4	10	2.8	2
SHW 14CRM	14	40	45.5	28	15	M3×4	34	5	12	3.3	2
SHW 17CRM	17	50	51	29	15	M4×5	38	6	14.5	4	2.5
SHW 21CR	21	54	59	31	19	M5×6	43.6	8	17.7	5	3.3
SHW 27CR	27	62	72.8	46	32	M6×6	56.6	10	23.5	6	3.5
SHW 35CR	35	100	107	76	50	M8×8	83	14	31	7.6	4
SHW 50CR	50	130	141	100	65	M10×15	107	18	46	14	4

Note) Symbol M indicates that stainless steel is used in the LM block, LM rail and balls. Those models marked with this symbol are therefore highly corrosion resistance and environment.

Model number coding

SHW17 CR 2 QZ KKHH C1 M +820L P M -Ⅱ

- SHW17: Model number
- CR: Type of LM block
- 2: No. of LM blocks used on the same rail
- QZ: With QZ Lubricator
- KKHH: Contamination protection accessory symbol (*1)
- C1: Radial clearance symbol (*2)
  - Normal (No symbol)
  - Light preload (C1)
  - Medium preload (C0)
- M: Stainless steel LM block
- +820L: LM rail length (in mm)
- P: Accuracy symbol (*3)
  - Normal grade (No Symbol)
  - High accuracy grade (H)/Precision grade (P)
  - Super precision grade (SP)/Ultra precision grade (UP)
- M: LM rail is made of stainless steel
- -Ⅱ: Symbol for No. of rails used on the same plane (* 4)

(*1) See contamination protection accessory on A1-494. (*2) See A1-70. (*3) See A1-76. (*4) See A1-13.

Note) Those models equipped with QZ Lubricator cannot have a grease nipple. When desiring a grease nipple for a model attached with QZ, contact THK.

Download data by searching for the corresponding model number on the Technical Support site. https://tech.thk.com

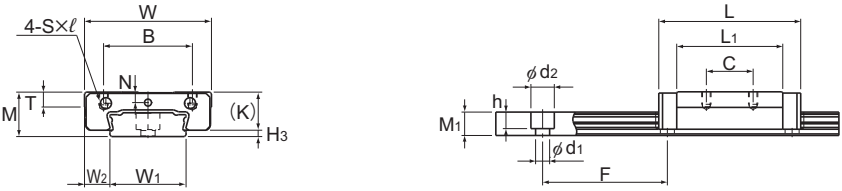

Models SHW12CRM, SHW12HRM and SHW14CRM

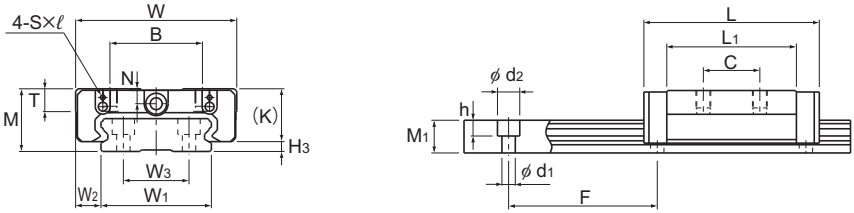

Models SHW17CRM and SHW21CR

Unit: mm

	LM rail dimensions							Basic load rating		Static permissible moment kN-m*					Mass	
	Width			Height	Pitch		Length*	C	C_0	M_A		M_B		M_C	LM block	LM rail
	W_1 0 -0.05	W_2	W_3	M_1	F	$d_1 \times d_2 \times h$	Max	kN	kN	1 block	Double blocks	1 block	Double blocks	1 block	kg	kg/m
	18	6	—	6.6	40	4.5×7.5×5.3	1230	4.31	5.66	0.0228	0.12	0.0228	0.12	0.0405	0.04	0.8
	18	6	—	6.6	40	4.5×7.5×5.3	1000	5.56	8.68	0.0511	0.246	0.0511	0.246	0.0621	0.06	0.8
	24	8	—	7.5	40	4.5×7.5×5.3	1430	7.05	8.98	0.0466	0.236	0.0466	0.236	0.0904	0.08	1.23
	33	8.5	18	8.6	40	4.5×7.5×5.3	1800	7.65	10.18	0.0591	0.298	0.0591	0.298	0.164	0.13	1.9
	37	8.5	22	11	50	4.5×7.5×5.3	3000	8.24	12.8	0.0806	0.434	0.0806	0.434	0.229	0.19	2.9
	42	10	24	15	60	4.5×7.5×5.3	3000	16	22.7	0.187	0.949	0.187	0.949	0.455	0.36	4.5
	69	15.5	40	19	80	7×11×9	3000	35.5	49.2	0.603	3	0.603	3	1.63	1.2	9.6
	90	20	60	24	80	9×14×12	3000	70.2	91.4	1.46	7.37	1.46	7.37	3.97	3	15

Note) If a grease nipple is required, indicate “with grease nipple;” if a greasing hole is required, indicate “with a tapped hole for greasing.”
The maximum length under “Length*” indicates the standard maximum length of an LM rail. (See A**1-144**.)
Static permissible moment*: 1 block: static permissible moment value with 1 LM block
Double blocks: static permissible moment value with 2 blocks closely contacting with each other

Options⇒A1-457

Standard Length and Maximum Length of the LM Rail

Table1 shows the standard lengths and the maximum lengths of model SHW variations. If the maximum length of the desired LM rail exceeds them, jointed rails will be used. Contact THK for details. For the G dimension when a special length is required, we recommend selecting the corresponding G value from the table. The longer the G dimension is, the less stable the G area may become after installation, thus causing an adverse impact to accuracy.

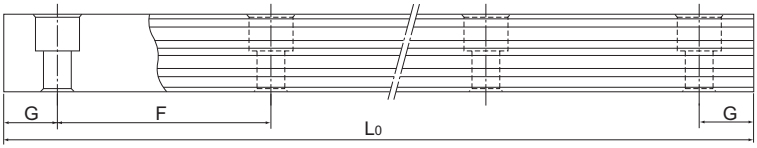

Table1 Standard Length and Maximum Length of the LM Rail for Model SHW

Unit: mm

Model No.	SHW 12	SHW 14	SHW 17	SHW 21	SHW 27	SHW 35	SHW 50
LM rail standard length (L_o)	70 110 150 190 230 270 310 390 470	70 110 150 190 230 270 310 390 470 550 670	110 190 310 470 550	130 230 380 480 580 780	160 280 340 460 640 820	280 440 760 1000 1240 1560	280 440 760 1000 1240 1640 2040
Standard pitch F	40	40	40	50	60	80	80
G	15	15	15	15	20	20	20
Max length	1230	1430	1800	3000	3000	3000	3000

Note1) The maximum length varies with accuracy grades. Contact THK for details.
Note2) If jointed rails are not allowed and a greater length than the maximum values above is required, contact THK.
Note3) Models SHW12, 14 and 17 are made of stainless steel.

Greasing Hole

[Grease Nipple and Greasing Hole for Model SHW]

Model SHW does not have a grease nipple as standard. Installation of a grease nipple and the drilling of a greasing hole is performed at THK. When ordering SHW, indicate that the desired model requires a grease nipple or greasing hole. (For greasing hole dimensions and supported grease nipple types and dimensions, see Table2).

When using SHW under harsh conditions, use QZ Lubricator* (optional) or Laminated Contact Scraper LaCS* (optional).

Note1) Grease nipple is not available for models SHW12 and SHW14. They can have a greasing hole.
Note2) Using a greasing hole other than for greasing may cause damage.
Note3) For QZ Lubricator*, see A1-487. For Laminated Contact Scraper LaCS*, see A1-464.
Note4) When desiring a grease nipple for a model attached with QZ Lubricator, contact THK.

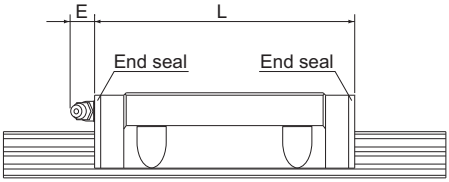

Fig.1 Dimensions of the Grease Nipple for Model SHW

Note) For the L dimension, see the corresponding specification table.

Table2 Table of Grease Nipple and Greasing Hole Dimensions

Unit: mm

Model No.		E	Grease nipple or greasing hole
SHW	12	—	ϕ2.2 drilled hole
	14	—	ϕ2.2 drilled hole
	17	5	PB107
	21	5.5	PB1021B
	27	12	B-M6F
	35	12	B-M6F
	50	16	B-PT1/8

SRS

Caged Ball LM Guide Miniature Type Model SRS

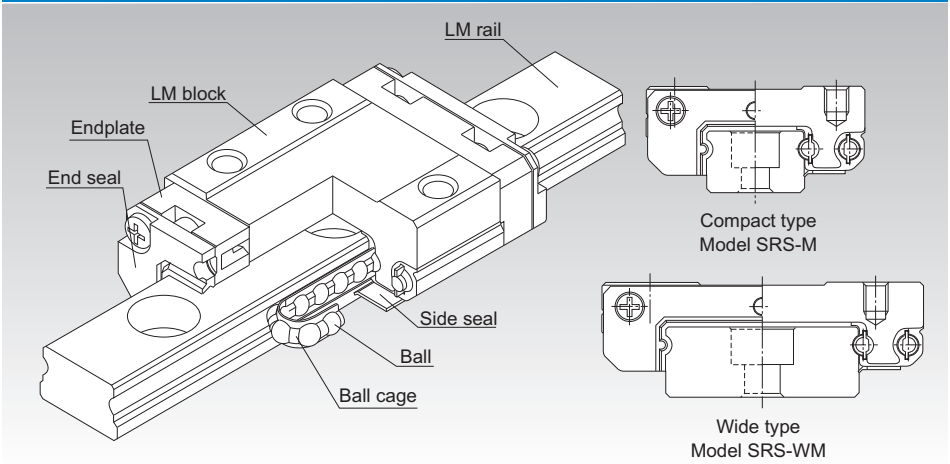

*For the ball cage, see A1-88.

Point of Selection A1-10

Point of Design A1-434

Options A1-457

Model No. A1-522

Precautions on Use A1-528

Accessories for Lubrication A24-1

Mounting Procedure and Maintenance B1-89

Equivalent moment factor A1-43

Rated Loads in All Directions A1-58

Equivalent factor in each direction A1-60

Radial Clearance A1-70

Accuracy Standards A1-82

Shoulder Height of the Mounting Base and the Corner Radius A1-449

Permissible Error of the Mounting Surface A1-451

Flatness of the Mounting Surface A1-452

Dimensions of Each Model with an Option Attached A1-470

Structure and Features

Caged Ball LM Guide model SRS has a structure where two raceways are incorporated into the compact body, enabling the model to receive loads in all directions, and to be used in locations where a moment is applied with a single rail. In addition, use of ball cages eliminates friction between balls, thus achieving high speed, low noise, acceptable running sound, long service life, and long-term maintenance-free operation.

[Low Dust Generation]
Use of ball cages eliminates friction between balls and retains lubricant, thus achieving low dust gen-eration. In addition, the LM block and LM rail use stainless steel, which is highly resistant to corrosion.

[Compact]
Since SRS has a compact structure where the rail cross section is designed to be low and that contains only two rows of balls, it can be installed in space-saving locations.

[Lightweight]
Since part of the LM block (e.g., around the ball relief hole) is made of resin and formed through insert molding, SRS is a lightweight, low inertia type of LM Guide.

Types and Features

Model SRS5M

Specification Table⇒A1-152

SRS5 is the smallest caged ball LM guide.

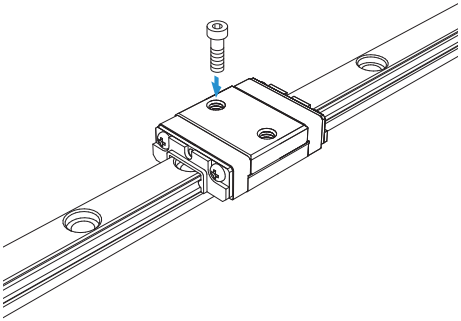

Model SRS-5N

Specification Table⇒A1-152

Overall LM block length (L) is greater than for model SRS5M; load rating and permissible moment are higher as well.

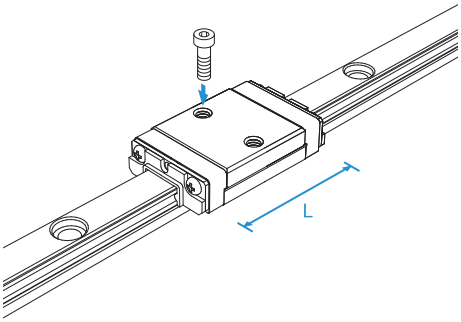

Model SRS5WM

Specification Table⇒A1-156

This model has a larger overall LM block length (L), width (W), rated load and permissible moment than model SRS5M.

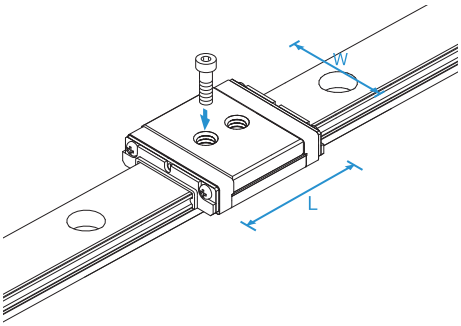

Model SRS-5WN

Specification Table⇒A1-156

Overall LM block length (L) is greater than for model SRS5WM; load rating and permissible moment are higher as well.

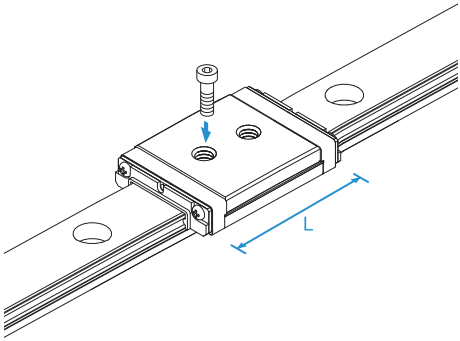

Model SRS-S

Specification Table⇒A1-152

Overall LM block length (L) is less than that of model SRS-M.

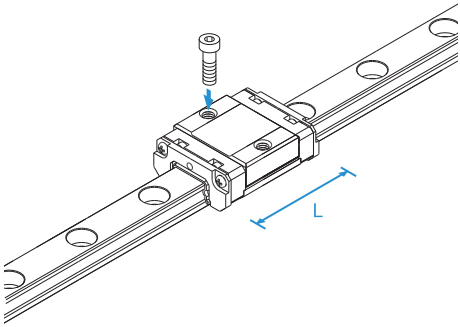

Model SRS-WS

Specification Table⇒A1-156

Has a longer overall LM block length (L), a greater width and a larger rated load and permissible moment than SRS-S.

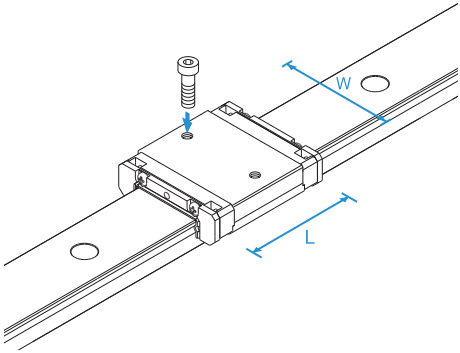

Model SRS-M

Specification Table⇒A1-152

A standard type of SRS.

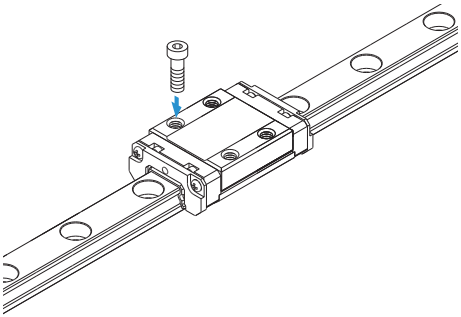

Model SRS-WM

Specification Table⇒A1-156

Has a longer overall LM block length (L), a greater width and a larger rated load and permissible moment than SRS-M.

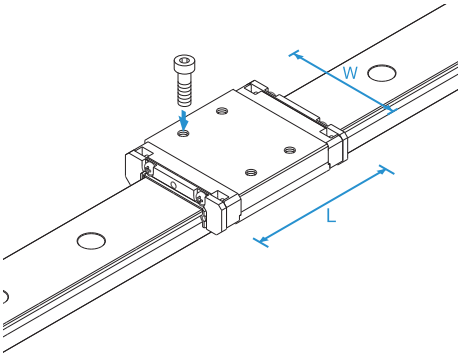

Model SRS-N

Specification Table⇒A1-152

Compared with model SRS-M, it has a longer total LM block length (L) and a higher load rating and permissible moment.

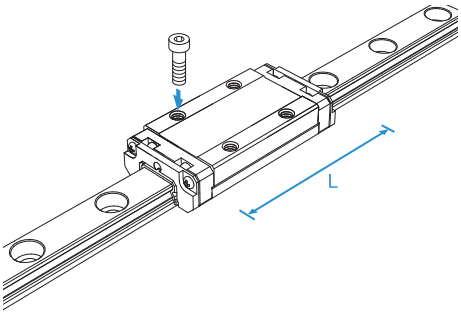

Model SRS-WN

Specification Table⇒A1-156

Compared with Model SRS-WM, it has a longer total LM block length (L) and a higher load rating and permissible moment.

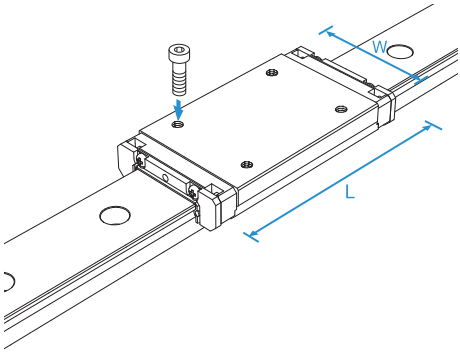

SRS-G

Specification Table⇒A1-152 to A1-158

The SRS-G, a model equipped with uncaged, full-complement bearings, is also available. Due to its cageless design, however, the SRS-G's dynamic load rating is lower than that of standard SRS models. For specific data, please refer to the dimension tables in this catalog.

Flatness of the LM Rail and the LM Block Mounting Surface

Since the Model SRS has Gothic-arch grooves, any precision errors in the mounting surface may negatively affect its operability. Therefore, we recommend using SRS on mounting surfaces made with high precision.

Table1 Flatness of the LM Rail and the LM Block Mounting Surface

Unit: mm

Model No.	Flatness error
SRS 5	0.015/200
SRS 7	0.025/200
SRS 9	0.035/200
SRS 12	0.050/200
SRS 15	0.060/200
SRS 20	0.070/200
SRS 25	0.070/200

Note 1) As many factors can affect the mounting precision, we recommend using values 70% or less than those shown.
Note 2) The above figures apply to normal clearances. When using two or more rails with C1 clearance, we recommend using values 50% or less than those shown.

Models SRS-S, SRS-M and SRS-N

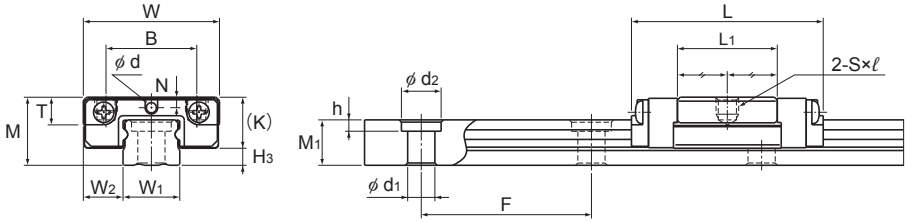

Model SRS5

Model No.	Outer dimensions			LM block dimensions								
	Height	Width	Length								Greasing hole	
	M	W	L	B	C	S×ℓ	L_1	T	K	N	d	H_3
SRS 5M SRS 5GM	6	12	16.9	8	—	M2×1.5	8.8	1.7	4.5	0.93	0.8	1.5
SRS 5N SRS 5GN	6	12	20.1	8	—	M2×1.5	12	1.7	4.5	0.93	0.8	1.5
SRS 7S SRS 7GS	8	17	19	12	—	M2×2.3	9	3.3	6.7	1.6	1.2	1.3
SRS 7M SRS 7GM	8	17	23.4	12	8	M2×2.3	13.4	3.3	6.7	1.6	1.2	1.3
SRS 7N SRS 7GN	8	17	31	12	13	M2×2.3	21	3.3	6.7	1.6	1.2	1.3
SRS 9XS SRS 9XGS	10	20	21.5	15	—	M3×2.8	10.5	4.5	8.5	2.4	1.6	1.5
SRS 9XM SRS 9XGM	10	20	30.8	15	10	M3×2.8	19.8	4.5	8.5	2.4	1.6	1.5
SRS 9XN SRS 9XGN	10	20	40.8	15	16	M3×2.8	29.8	4.5	8.5	2.4	1.6	1.5
SRS 12S SRS 12GS	13	27	25	20	—	M3×3.2	11.2	5.7	11	3	2	2
SRS 12M SRS 12GM	13	27	34.4	20	15	M3×3.2	20.6	5.7	11	3	2	2
SRS 12N SRS 12GN	13	27	47.1	20	20	M3×3.2	33.3	5.7	11	3	2	2

Note) Since stainless steel is used in the LM block, LM rail and balls, these models are highly resistant to corrosion and environment.
The SRS-G is equipped with uncaged, full-complement bearings.
Using a greasing hole other than for greasing may cause damage.

Model number coding

2 SRS12M QZ UU C1 +220L P M -Ⅱ

- 2: No. of LM blocks used on the same rail
- SRS12M: Model No.
- QZ: With QZ Lubricator
- UU: Contamination protection accessory symbol (*1)
- C1: Radial clearance symbol (*2) Normal (No symbol)/Light preload (C1)
- +220L: LM rail length (in mm)
- P: Accuracy symbol (*3) Normal grade (No Symbol)/High accuracy grade (H) Precision grade (P)
- M: Stainless steel LM rail
- -Ⅱ: Symbol for No. of rails used on the same plane (*4)

(*1) See contamination protection accessory on A1-494. (*2) See A1-70. (*3) See A1-82. (*4) See A1-13.

Note) This model number indicates that a single-rail unit constitutes one set. (i.e., required number of sets when 2 rails are used in parallel is 2 at a minimum.)
Those models equipped with QZ Lubricator cannot have a grease nipple. When desiring a grease nipple for a model attached with QZ, contact THK.

Download data by searching for the corresponding model number on the Technical Support site. https://tech.thk.com

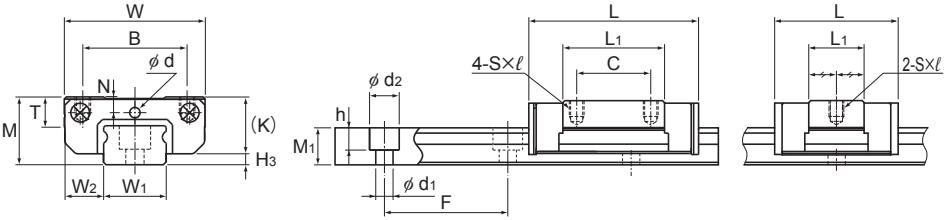

Models SRS7M/N,9XM/XN,12M/N　　Models SRS7S,9XS,12S

Unit: mm

	LM rail dimensions						Basic load rating		Static permissible moment N-m*					Mass	
	Width		Height	Pitch		Length*	C	C_0	M_A		M_B		M_C	LM block	LM rail
	W_1	W_2	M_1	F	$d_1 \times d_2 \times h$	Max	kN	kN	1 block	Double blocks	1 block	Double blocks	1 block	kg	kg/m
	5 $^{0}_{-0.02}$	3.5	4	15	2.4×3.5×1	220	0.439 0.366	0.468 0.527	0.74 0.79	5.11 5.76	0.86 0.94	5.99 6.91	1.21 1.37	0.002	0.13
	5 $^{0}_{-0.02}$	3.5	4	15	2.4×3.5×1	220	0.515 0.448	0.586 0.703	1.12 1.34	7.45 8.82	1.31 1.57	8.73 10.3	1.52 1.83	0.003	0.13
	7 $^{0}_{-0.02}$	5	4.7	15	2.4×4.2×2.3	480	1.09 0.946	0.964 1.16	1.60 1.96	12.6 14.7	1.83 2.25	14.5 16.9	3.73 4.49	0.005	0.25
	7 $^{0}_{-0.02}$	5	4.7	15	2.4×4.2×2.3	480	1.51 1.16	1.29 1.54	3.09 3.61	17.2 25.5	3.69 4.14	17.3 29.4	5.02 6.57	0.009	0.25
	7 $^{0}_{-0.02}$	5	4.7	15	2.4×4.2×2.3	480	2.01 1.63	2.31 2.51	7.77 8.08	43.2 46.9	8.96 9.32	50.0 54.2	8.96 9.72	0.012	0.25
	9 $^{0}_{-0.02}$	5.5	5.5	20	3.5×6×3.3	1240	1.78 1.37	1.53 1.53	3.15 2.85	22.2 22.6	3.61 3.27	25.6 26	7.04 7.04	0.009	0.36
	9 $^{0}_{-0.02}$	5.5	5.5	20	3.5×6×3.3	1240	2.69 2.22	2.75 3.06	9.31 9.87	52.2 57.9	10.7 11.4	60.3 66.9	12.7 14.1	0.016	0.36
	9 $^{0}_{-0.02}$	5.5	5.5	20	3.5×6×3.3	1240	3.48 2.94	3.98 4.59	18.7 21.1	96.5 111	21.6 24.4	112 128	18.3 21.1	0.024	0.36
	12 $^{0}_{-0.02}$	7.5	7.5	25	3.5×6×4.5	2000	2.70 2.07	2.10 2.10	4.62 4.17	37.5 38.1	4.62 4.17	37.5 38.1	13.8 13.8	0.017	0.65
	12 $^{0}_{-0.02}$	7.5	7.5	25	3.5×6×4.5	2000	4.00 3.36	3.53 3.55	12.0 12.1	78.5 79.0	12.0 12.1	78.5 79.0	23.1 23.2	0.027	0.65
	12 $^{0}_{-0.02}$	7.5	7.5	25	3.5×6×4.5	2000	5.82 4.72	5.30 6.83	28.4 34.8	151 195	28.4 34.8	151 195	34.7 44.7	0.049	0.65

Note) The maximum length under "Length * " indicates the standard maximum length of an LM rail. (See A1-160.)
Static Permissible Moment *1 block: Static permissible moment value with 1 LM block
Double blocks: static permissible moment value with 2 blocks closely contacting with each other
For the SRS5M and SRS5N LM guide, the balls will fall out of the block if it is removed from the rail.
To secure the LM rail of model SRS5M, use cross-recessed head screws for precision equipment (No. 0 pan head screw, class 1) M2.

- Reference bolt tightening torque when mounting an LM block for model SRS 5 and 7 are shown in the table below.

Reference tightening torque

Model No.	Model No. of screw	Screw depth (mm)	Reference tightening torque(N-m)*
SRS 5	M2	1.5	0.4
SRS 7	M2	2.3	0.4

*Tightening above the tightening torque affects accuracy.
Be sure to tighten at or below the defi ned tightening torque.

Options⇒A1-457

Models SRS-S, SRS-M and SRS-N

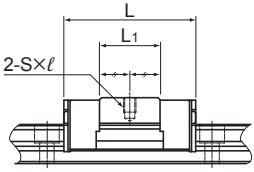

Model SRS15S

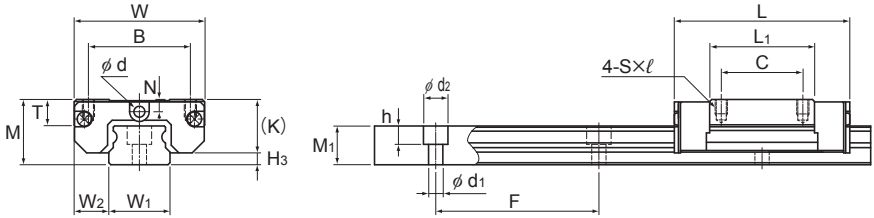

Models SRS15M/N,20M,25M

Model No.	Outer dimensions			LM block dimensions										
	Height M	Width W	Length L	B	C	S×ℓ	L_1	T	K	N	E	Greasing hole d	Grease nipple	H_3
SRS 15S SRS 15GS	16	32	32	25	—	M3×3.5	14.7	6.5	13.3	3	— 4	3 —	— PB107	2.7
SRS 15M SRS 15GM	16	32	43	25	20	M3×3.5	25.7	6.5	13.3	3	— 4	3 —	— PB107	2.7
SRS 15N SRS 15GN	16	32	60.8	25	25	M3×3.5	43.5	6.5	13.3	3	— 4	3 —	— PB107	2.7
SRS 20M SRS 20GM	20	40	50	30	25	M4×6	34	9	16.6	4	— 3.5	3 —	— PB107	3.4
SRS 25M SRS 25GM	25	48	77	35	35	M6×7	56	11	20	5	— 4	4 —	— PB1021B	5

Note) Since stainless steel is used in the LM block, LM rail and balls, these models are highly resistant to corrosion and environment.
The SRS-G is equipped with uncaged, full-complement bearings.
For the SRS15S/M/N, 20M, and 25M, if a grease nipple is required, please specify upon ordering.
Using a greasing hole other than for greasing may cause damage.

Model number coding

2 SRS20M QZ UU C1 +220L P M -Ⅱ

- 2: No. of LM blocks used on the same rail
- SRS20M: Model No.
- QZ: With QZ Lubricator
- UU: Contamination protection accessory symbol (*1)
- C1: Radial clearance symbol (*2) Normal (No symbol)/Light preload (C1)
- +220L: LM rail length (in mm)
- P: Accuracy symbol (*3) Normal grade (No Symbol)/High accuracy grade (H) Precision grade (P)
- M: Stainless steel LM rail
- -Ⅱ: Symbol for No. of rails used on the same plane (*4)

(*1) See contamination protection accessory on A1-494. (*2) See A1-70. (*3) See A1-82. (*4) See A1-13.

Note) This model number indicates that a single-rail unit constitutes one set. (i.e., required number of sets when 2 rails are used in parallel is 2 at a minimum.)
Those models equipped with QZ Lubricator cannot have a grease nipple. When desiring a grease nipple for a model attached with QZ, contact THK.

Download data by searching for the corresponding model number on the Technical Support site. https://tech.thk.com

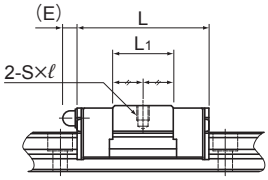

Model SRS15GS

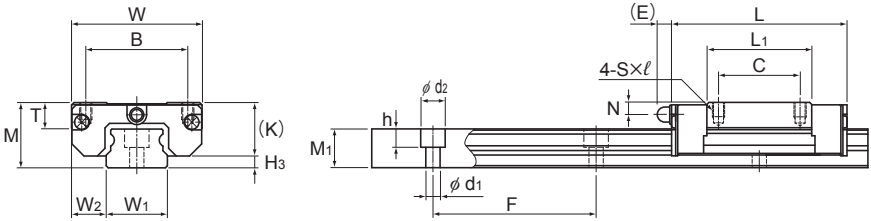

Models SRS15GM/GN,20GM,25GM

Unit: mm

	LM rail dimensions						Basic load rating		Static permissible moment N-m*					Mass	
	Width		Height	Pitch		Length*	C	C_0	M_A		M_B		M_C	LM block	LM rail
	W_1	W_2	M_1	F	$d_1 \times d_2 \times h$	Max	kN	kN	1 block	Double blocks	1 block	Double blocks	1 block	kg	kg/m
	15 $^{0}_{-0.02}$	8.5	9.5	40	3.5×6×4.5	2000	4.50 4.01	3.39 4.24	9.54 12.6	77.5 92.7	9.54 12.6	77.5 92.7	24.1 30.1	0.033	0.96
	15 $^{0}_{-0.02}$	8.5	9.5	40	3.5×6×4.5	2000	6.66 5.59	5.7 5.72	26.2 24.8	154 158	26.2 24.8	154 158	40.4 40.6	0.047	0.96
	15 $^{0}_{-0.02}$	8.5	9.5	40	3.5×6×4.5	2000	9.71 8.27	8.55 11.9	59.7 82.3	312 433	59.7 82.3	312 433	60.7 84.5	0.095	0.96
	20 $^{0}_{-0.03}$	10	11	60	6×9.5×8	1800	7.75 5.95	9.77 9.4	54.3 44.7	296 242	62.4 53.3	341 289	104 91.4	0.11	1.68
	23 $^{0}_{-0.03}$	12.5	15	60	7×11×9	1800	16.5 13.3	20.2 22.3	177 181	932 962	177 181	932 962	248 255	0.24	2.6

Note) The maximum length under "Length * " indicates the standard maximum length of an LM rail. (See A1-160.)
Static Permissible Moment *1 block: static permissible moment value with 1 LMblock
Double blocks: static permissible moment value with 2 blocks closely contacting with each other

Options⇒A1-457

Models SRS-WS, SRS-WM and SRS-WN

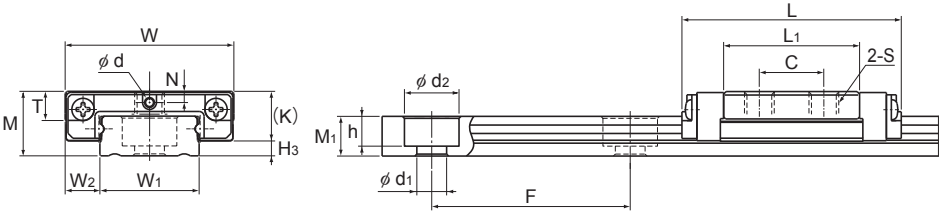

Model SRS5

Model No.	Outer dimensions			LM block dimensions								
	Height M	Width W	Length L	B	C	S×ℓ	L_1	T	K	N	Greasing hole d	H_3
SRS 5WM SRS 5WGM	6.5	17	22.1	—	6.5	M3 through	13.7	2.7	5	1.1	0.8	1.5
SRS 5WN SRS 5WGN	6.5	17	28.1	—	11	M3 through	19.7	2.7	5	1.1	0.8	1.5
SRS 7WS SRS 7WGS	9	25	22.5	19	—	M3×2.8	11.9	3.8	7.2	1.8	1.2	1.8
SRS 7WM SRS 7WGM	9	25	31	19	10	M3×2.8	20.4	3.8	7.2	1.8	1.2	1.8
SRS 7WN SRS 7WGN	9	25	40.9	19	17	M3×2.8	30.3	3.8	7.2	1.8	1.2	1.8
SRS 9WS SRS 9WGS	12	30	26.5	21	—	M3×2.8	14.5	4.9	9.1	2.3	1.6	2.9
SRS 9WM SRS 9WGM	12	30	39	21	12	M3×2.8	27	4.9	9.1	2.3	1.6	2.9
SRS 9WN SRS 9WGN	12	30	50.7	23	24	M3×2.8	38.7	4.9	9.1	2.3	1.6	2.9
SRS 12WS SRS 12WGS	14	40	30.5	28	—	M3×3.5	16.9	5.7	11	3	2	3
SRS 12WM SRS 12WGM	14	40	44.5	28	15	M3×3.5	30.9	5.7	11	3	2	3
SRS 12WN SRS 12WGN	14	40	59.5	28	28	M3×3.5	45.9	5.7	11	3	2	3

Note) Since stainless steel is used in the LM block, LM rail and balls, these models are highly resistant to corrosion and environment.
The SRS-G is equipped with uncaged, full-complement bearings.
Using a greasing hole other than for greasing may cause damage.

Model number coding

2 SRS12WM QZ UU C1 +470L P M -Ⅱ

- 2: No. of LM blocks used on the same rail
- SRS12WM: Model No.
- QZ: With QZ Lubricator
- UU: Contamination protection accessory symbol (*1)
- C1: Radial clearance symbol (*2) Normal (No symbol)/ Light preload (C1)
- +470L: LM rail length (in mm)
- P: Accuracy symbol (*3) Normal grade (No Symbol)/High accuracy grade (H) Precision grade (P)
- M: Stainless steel LM rail
- -Ⅱ: Symbol for No. of rails used on the same plane (*4)

(*1) See contamination protection accessory on A1-494. (*2) See A1-70. (*3) See A1-82. (*4) See A1-13.

Note) This model number indicates that a single-rail unit constitutes one set. (i.e., required number of sets when 2 rails are used in parallel is 2 at a minimum.)
Those models equipped with QZ Lubricator cannot have a grease nipple. When desiring a grease nipple for a model attached with QZ, contact THK.

Download data by searching for the corresponding model number on the Technical Support site. https://tech.thk.com

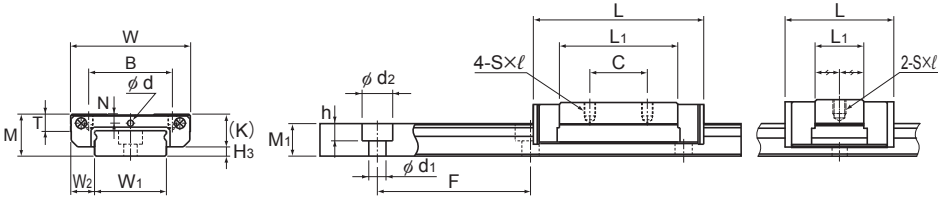

Models SRS7WM/WN,9WM/WN,12WM/WN

Models SRS7 to 12WS

Unit: mm

	LM rail dimensions							Basic load rating		Static permissible moment N-m*					Mass	
	Width			Height	Pitch		Length*	C	C_0	M_A		M_B		M_C	LM block	LM rail
	W_1	W_2	W_3	M_1	F	$d_1 \times d_2 \times h$	Max	kN	kN	1 block	Double blocks	1 block	Double blocks	1 block	kg	kg/m
	10 $^{0}_{-0.02}$	3.5	—	4	20	3×5.5×3	220	0.584 0.498	0.703 0.82	1.57 1.79	9.59 11.1	1.83 2.15	11.24 13.3	3.58 4.18	0.005	0.27
	10 $^{0}_{-0.02}$	3.5	—	4	20	3×5.5×3	220	0.746 0.64	0.996 1.17	3.01 3.54	16.8 19.6	3.53 4.15	19.7 23	5.08 5.97	0.007	0.27
	14 $^{0}_{-0.02}$	5.5	—	5.2	30	3.5×6×3.2	480	1.38 1.06	1.35 1.35	2.89 2.58	19.6 20.0	3.32 2.96	22.7 23.1	9.95 9.95	0.011	0.56
	14 $^{0}_{-0.02}$	5.5	—	5.2	30	3.5×6×3.2	480	2.01 1.63	1.94 2.51	6.47 8.87	36.4 51.5	7.71 10.2	42.3 59.5	14.33 20.3	0.018	0.56
	14 $^{0}_{-0.02}$	5.5	—	5.2	30	3.5×6×3.2	480	2.56 2.12	3.28 3.66	15.0 16.6	78.9 87.7	17.4 19.2	91.2 101	24.2 27	0.026	0.56
	18 $^{0}_{-0.02}$	6	—	7.5	30	3.5×6×4.5	1430	2.03 1.73	1.84 2.14	4.49 5.15	32.1 36.9	5.15 5.92	38.9 42.6	17.4 20.2	0.018	1.01
	18 $^{0}_{-0.02}$	6	—	7.5	30	3.5×6×4.5	1430	3.29 2.67	3.34 3.35	14.0 13.9	78.6 69.7	16.2 16.6	91.0 96.7	31.5 31.7	0.031	1.01
	18 $^{0}_{-0.02}$	6	—	7.5	30	3.5×6×4.5	1430	4.20 3.48	4.37 5.81	25.1 33.2	130 172	29.1 40	151 208	41.3 54.9	0.049	1.01
	24 $^{0}_{-0.02}$	8	—	8.5	40	4.5×8×4.5	2000	3.58 3.05	3.15 3.68	9.77 11.1	63 72.6	9.77 11.1	63 72.6	39.5 46.2	0.034	1.52
	24 $^{0}_{-0.02}$	8	—	8.5	40	4.5×8×4.5	2000	5.48 4.46	5.3 5.32	26.4 25.7	143 146	26.4 25.7	143 146	66.5 66.8	0.055	1.52
	24 $^{0}_{-0.02}$	8	—	8.5	40	4.5×8×4.5	2000	7.13 5.93	7.07 9.46	49.2 64.7	249 332	49.2 64.7	249 332	88.7 119	0.091	1.52

Note) The maximum length under "Length * " indicates the standard maximum length of an LM rail. (See A**1-160**.)
Static Permissible Moment *1 block: static permissible moment value with 1 LMblock
Double blocks: static permissible moment value with 2 blocks closely contacting with each other
For the SRS5WM and SRS5WN, the balls will fall out of the block if it is removed from the rail.

- Reference bolt tightening torque when mounting an LM block for model SRS 5 and 7W are shown in the table below.

Reference tightening torque

Model No.	Model No. of screw	Screw depth (mm)	Reference tightening torque(N-m)*
SRS 5W	M3	2.3	0.4
SRS 7W	M3	2.8	0.4

*Tightening above the tightening torque affects accuracy.
Be sure to tighten at or below the defi ned tightening torque.

Options⇒A1-457

Models SRS-WS, SRS-WM and SRS-WN

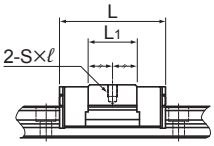

Model SRS15WS

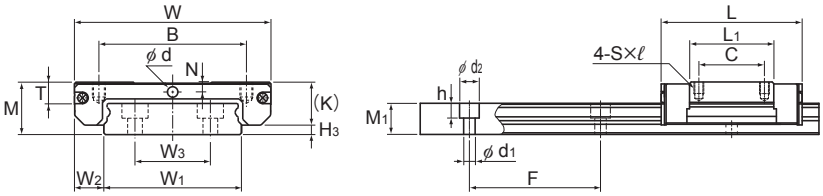

Model SRS15WM/WN

Model No.	Outer dimensions			LM block dimensions										H_3
	Height M	Width W	Length L	B	C	S×ℓ	L_1	T	K	N	E	Greasing hole d	Grease nipple	
SRS 15WS SRS 15WGS	16	60	41.5	45	—	M4×4.5	24.9	6.5	13.3	3	— 4	3 —	— PB107	2.7
SRS 15WM SRS 15WGM	16	60	55.5	45	20	M4×4.5	38.9	6.5	13.3	3	— 4	3 —	— PB107	2.7
SRS 15WN SRS 15WGN	16	60	74.5	45	35	M4×4.5	57.9	6.5	13.3	3	— 4	3 —	— PB107	2.7

Note) Since stainless steel is used in the LM block, LM rail and balls, these models are highly resistant to corrosion and environment.
The SRS-G is equipped with uncaged, full-complement bearings.
For the SRS15WS/WM/WN, if a grease nipple is required, please specify upon ordering.
Using a greasing hole other than for greasing may cause damage.

Model number coding

2 SRS15WM QZ UU C1 +550L P M -Ⅱ

- 2: No. of LM blocks used on the same rail
- SRS15WM: Model No.
- QZ: With QZ Lubricator
- UU: Contamination protection accessory symbol (*1)
- C1: Radial clearance symbol (*2) Normal (No symbol)/ Light preload (C1)
- +550L: LM rail length (in mm)
- P: Accuracy symbol (*3) Normal grade (No Symbol)/High accuracy grade (H) Precision grade (P)
- M: Stainless steel LM rail
- -Ⅱ: Symbol for No. of rails used on the same plane (*4)

(*1) See contamination protection accessory on A1-494. (*2) See A1-70. (*3) See A1-82. (*4) See A1-13.

Note) This model number indicates that a single-rail unit constitutes one set. (i.e., required number of sets when 2 rails are used in parallel is 2 at a minimum.)
Those models equipped with QZ Lubricator cannot have a grease nipple. When desiring a grease nipple for a model attached with QZ, contact THK.

Download data by searching for the corresponding model number on the Technical Support site. https://tech.thk.com

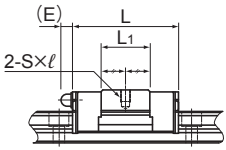

Model SRS15WGS

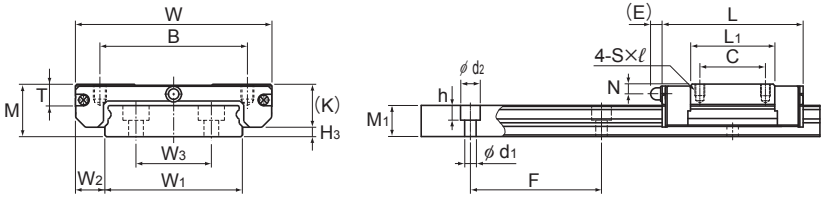

Model SRS15WGM/WGN

Unit: mm

	LM rail dimensions							Basic load rating		Static permissible moment N-m*					Mass	
	Width			Height	Pitch		Length*	C	C_0	M_A		M_B		M_C	LM block	LM rail
	W_1	W_2	W_3	M_1	F	$d_1 \times d_2 \times h$	Max	kN	kN	1 block	Double blocks	1 block	Double blocks	1 block	kg	kg/m
	42 $^{0}_{-0.02}$	9	23	9.5	40	4.5×8×4.5	2000	6.64 5.59	5.94 6.78	25.4 29	158 178	25.4 29	158 178	123 140	0.087	2.87
	42 $^{0}_{-0.02}$	9	23	9.5	40	4.5×8×4.5	2000	9.12 7.43	8.55 8.59	51.2 52.7	290 293	51.2 52.7	290 293	176 178	0.13	2.87
	42 $^{0}_{-0.02}$	9	23	9.5	40	4.5×8×4.5	2000	12.4 9.87	12.1 15.3	106 133	532 671	106 133	532 671	250 317	0.201	2.87

Note) The maximum length under "Length * " indicates the standard maximum length of an LM rail. (See A1-160.)
Static Permissible Moment *1 block: static permissible moment value with 1 LMblock
Double blocks: static permissible moment value with 2 blocks closely contacting with each other

Options⇒A1-457

Standard Length and Maximum Length of the LM Rail

Table2 shows the standard lengths and the maximum lengths of model SRS variations. If the maximum length of the desired LM rail exceeds them, jointed rails will be used. Contact THK for details. For the G dimension when a special length is required, we recommend selecting the corresponding G value from the table. The longer the G dimension is, the less stable the G area may become after installation, thus causing an adverse impact to accuracy.

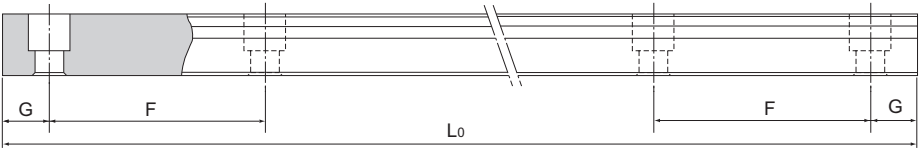

Table2 Standard Length and Maximum Length of the LM Rail for Model SRS

Unit: mm

Model No.	SRS 5	SRS 5W	SRS 7	SRS 7W	SRS 9	SRS 9W	SRS 12	SRS 12W	SRS 15	SRS 15W	SRS 20	SRS 25
LM rail standard length (L_o)	40 55 70 100 130 160	50 70 90 110 130 150 170	40 55 70 85 100 115 130	50 80 110 140 170 200 260 290	55 75 95 115 135 155 175 195 275 375	50 80 110 140 170 200 260 290 320	70 95 120 145 170 195 220 245 270 320 370 470 570	70 110 150 190 230 270 310 390 470 550	70 110 150 190 230 270 310 350 390 430 470 550 670 870	110 150 190 230 270 310 430 550 670 790	220 280 340 460 640 880 1000	220 280 340 460 640 880 1000
Standard pitch F	15	20	15	30	20	30	25	40	40	40	60	60
G	5	5	5	10	7.5	10	10	15	15	15	20	20
Max length	220	220	480	480	1240	1430	2000	2000	2000	2000	1800	1800

Note1) The maximum length varies with accuracy grades. Contact THK for details.
Note2) If jointed rails are not allowed and a greater length than the maximum values above is required, contact THK.

SCR

Caged Ball LM Guide Cross LM Guide Model SCR

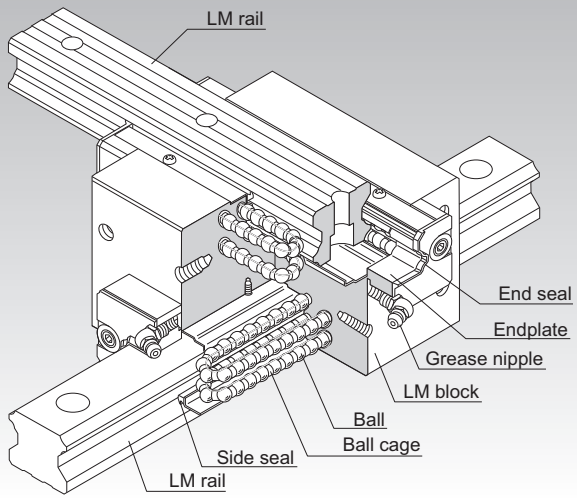

*For the ball cage, see A1-88.

Point of Selection	**A1-10**
Point of Design	**A1-434**
Options	**A1-457**
Model No.	**A1-522**
Precautions on Use	**A1-528**
Accessories for Lubrication	**A24-1**
Mounting Procedure and Maintenance	**B1-89**
Equivalent moment factor	A1-43
Rated Loads in All Directions	A1-58
Equivalent factor in each direction	A1-60
Radial Clearance	A1-70
Accuracy Standards	A1-79
Shoulder Height of the Mounting Base and the Corner Radius	A1-444
Permissible Error of the Mounting Surface	A1-450
Dimensions of Each Model with an Option Attached	A1-470

Structure and Features

Balls roll in four rows of raceways precision-ground on an LM rail and an LM block, and ball cages and endplates incorporated in the LM block allow the balls to circulate.
This model is an integral type of Caged Ball LM Guide that squares an internal structure similar to model SHS, which has a proven track record and is highly reliable, with another and uses two LM rails in combination. Since an orthogonal LM system can be achieved with model SCR alone, a conventionally required saddle is no longer necessary, the structure for X-Y motion can be simplified and the whole system can be downsized.

[4-way Equal Load]
Each row of balls is placed at a contact angle of 45° so that the rated loads applied to the LM block are uniform in the four directions (radial, reverse radial and lateral directions), enabling the LM Guide to be used in all orientations and in extensive applications.

[High Rigidity]
Since balls are arranged in four rows in a well-balanced manner, this model is stiff against a moment, and smooth straight motion is ensured even a preload is applied to increase the rigidity.
Since the rigidity of the LM block is higher than that of a combination of two LM blocks of the conventional type secured together back-to-back with bolts, this model is optimal for building an X-Y table that requires a high rigidity.

[Compact]
This model is an integral type of Caged Ball LM Guide that squares an internal structure similar to model SHS, which has a proven track record and is highly reliable, with another and uses two LM rails in combination. Since an orthogonal LM Guide can be achieved with model SCR alone, a conventionally required saddle is no longer necessary, the structure for X-Y motion can be simplified and the whole system can be downsized.

Types and Features

Model SCR

Specification Table⇒A1-166

This model is a standard type.

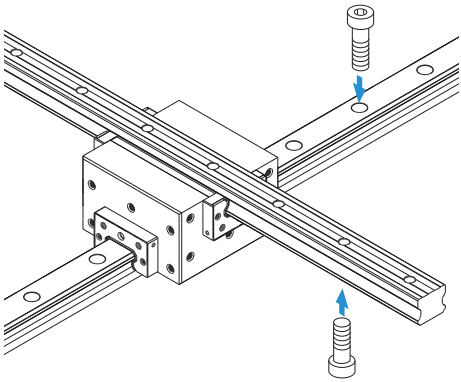

Drawing of Using an Inner Saddle

Model SCR can easily be assembled and adjusted by using an inner saddle to link four LM blocks together. When installed on an inner saddle, model SCR achieves a highly accurate X-Y guide and high rigidity moment in the yawing direction (as indicated by the arrow in the figure).

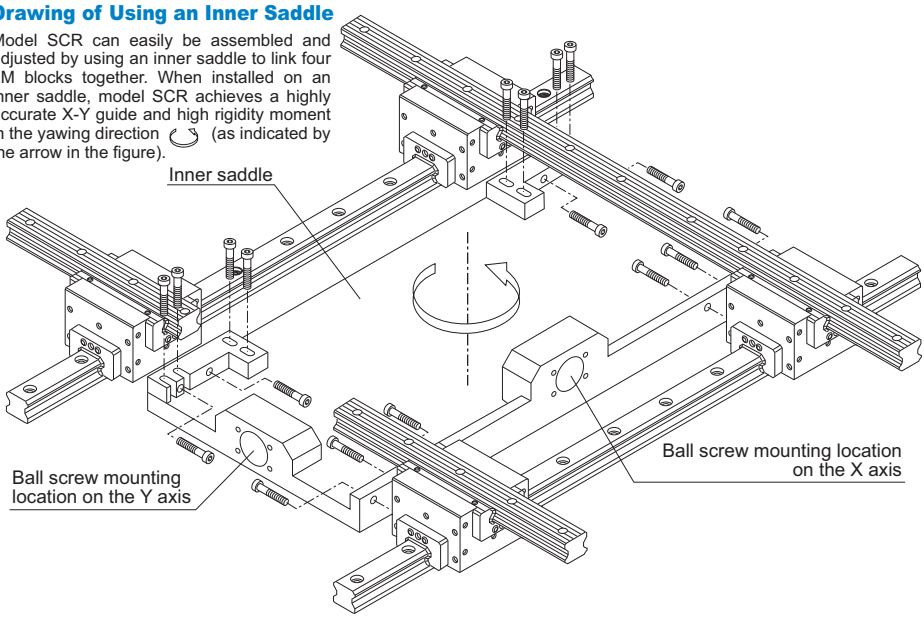

Model SCR

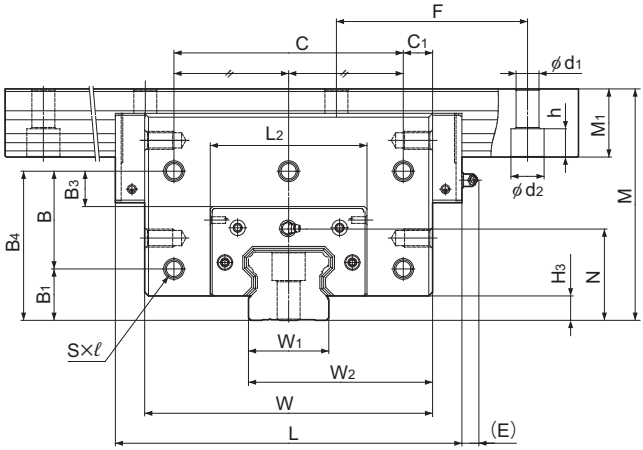

Model No.	Outer dimensions			LM block dimensions										
	Height	Width	Length											
	M	W	L	B_1	B_3	B_4	B	C	C_1	S×ℓ	L_2	H_3	N	E
SCR 15S	47	48	64.4	—	11.3	34.8	—	20	14	2×2-M4×6	33.4	3	18.5	5.5
SCR 20S	57	59	79	—	13	42.5	—	30	14.5	2×2-M5×8	43	4.6	23.5	12
SCR 20	57	78	98	13	7.5	37	24	56	11	2×5-M5×8	43	4.6	23.5	12
SCR 25	70	88	109	18	9	44	26	64	12	2×5-M6×10	47.4	5.8	28.5	12
SCR 30	82	105	131	21	12	53	32	76	14.5	2×5-M6×10	58	7	34	12
SCR 35	95	123	152	24	14	61	37	90	16.5	2×5-M8×14	68	7.5	40	12
SCR 45	118	140	174	30	16.5	75	45	110	15	2×5-M10×15	84.6	8.9	49.5	16
SCR 65	180	226	272	40	27.5	116	76	180	23	2×5-M14×22	123	19	71	16

Model number coding

4 SCR25 QZ KKHH C0 +1200/1000L P

- 4: Total No. of LM blocks
- SCR25: Model number
- QZ: With QZ Lubricator
- KKHH: Contamination protection accessory symbol (*1)
- C0: Radial clearance symbol (*2) Normal (No symbol)/Light preload (C1) Medium preload (C0)
- +1200: LM rail length on the X axis (in mm)
- 1000L: LM rail length on the Y axis (in mm)
- P: Accuracy symbol (*3) Precision grade (P) Super precision grade (SP) Ultra precision grade (UP)

(*1) See contamination protection accessory on A1-494. (*2) See A1-70. (*3) See A1-79.

Note) Those models equipped with QZ Lubricator cannot have a grease nipple. When desiring a grease nipple for a model attached with QZ, contact THK.

Download data by searching for the corresponding model number on the Technical Support site. https://tech.thk.com

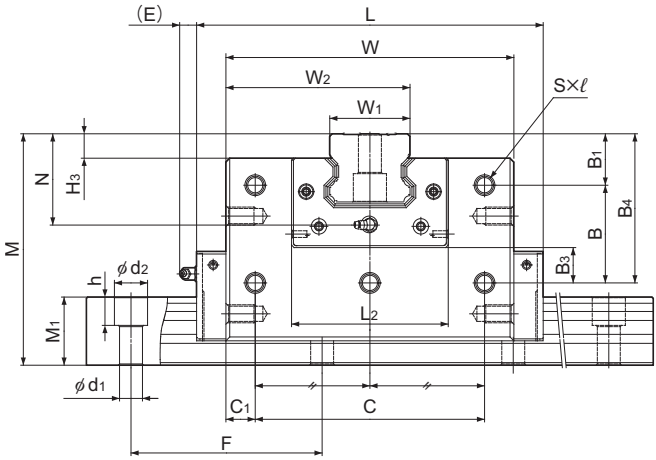

Unit: mm

		LM rail dimensions					Basic load rating		Static permissible moment*		Mass	
	Grease nipple	Width W_1 $^{0}_{-0.05}$	W_2	Height M_1	Pitch F	Mounting hole $d_1 \times d_2 \times h$	C kN	C_0 kN	M_O kN-m	M_B kN-m	LM block kg	LM rail kg/m
	PB1021B	15	31.5	13	60	4.5×7.5×5.3	14.2	24.2	0.16	0.175	0.54	1.3
	B-M6F	20	39.5	16.5	60	6×9.5×8.5	22.3	38.4	0.334	0.334	0.88	2.3
	B-M6F	20	49	16.5	60	6×9.5×8.5	28.1	50.3	0.473	0.568	1.7	2.3
	B-M6F	23	55.5	20	60	7×11×9	36.8	64.7	0.696	0.848	3.4	3.2
	B-M6F	28	66.5	23	80	9×14×12	54.2	88.8	1.15	1.36	4.6	4.5
	B-M6F	34	78.5	26	80	9×14×12	72.9	127	2.01	2.34	6.8	6.2
	B-PT1/8	45	92.5	32	105	14×20×17	100	166	3.46	3.46	10.8	10.4
	B-PT1/8	63	144.5	53	150	18×26×22	253	408	11.9	13.3	44.5	23.7

Note) Static permissible moment*: Static permissible moment value with 1 LM block

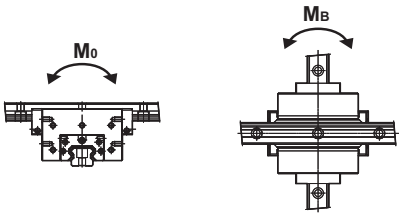

Standard Length and Maximum Length of the LM Rail

Table1 shows the standard and maximum lengths of the SCR model rail. If a rail length longer than the listed max length is required, rails may be jointed to meet the overall length. Contact THK for details. For special rail lengths, it is recommended to use a value corresponding to the G dimension from the table. As the G dimension increases, this portion becomes less stable and the accuracy performance is severely impacted.

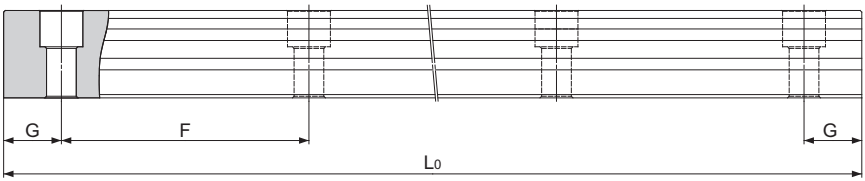

Table1 Standard Length and Maximum Length of the LM Rail for Model SCR

Unit: mm

Model No.	SCR 15	SCR 20	SCR 25	SCR 30	SCR 35	SCR 45	SCR 65
LM rail standard length (L_0)	160 220 280 340 400 460 520 580 640 700 760 820 940 1000 1060 1120 1180 1240 1360 1480 1600	220 280 340 400 460 520 580 640 700 760 820 940 1000 1060 1120 1180 1240 1360 1480 1600 1720 1840 1960 2080 2200	220 280 340 400 460 520 580 640 700 760 820 940 1000 1060 1120 1180 1240 1300 1360 1420 1480 1540 1600 1720 1840 1960 2080 2200 2320 2440	280 360 440 520 600 680 760 840 920 1000 1080 1160 1240 1320 1400 1480 1560 1640 1720 1800 1880 1960 2040 2200 2360 2520 2680 2840 3000	280 360 440 520 600 680 760 840 920 1000 1080 1160 1240 1320 1400 1480 1560 1640 1720 1800 1880 1960 2040 2200 2360 2520 2680 2840 3000	570 675 780 885 990 1095 1200 1305 1410 1515 1620 1725 1830 1935 2040 2145 2250 2355 2460 2565 2670 2775 2880 2985 3090	1270 1570 2020 2620
Standard pitch F	60	60	60	80	80	105	150
G	20	20	20	20	20	22.5	35
Max length	3000	3000	3000	3000	3000	3090	3000

Tapped-hole LM Rail Type of Model SCR

The model SCR variations include a type with its LM rail bottom tapped. With the X-axis LM rail having tapped holes, this model can be secured with bolts from the top.

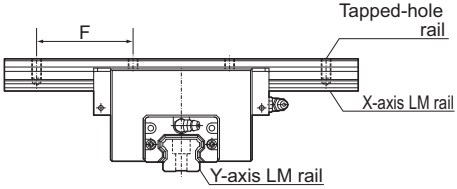

Table2 Dimensions of the LM Rail Tap Unit: mm

Model No.	Tap diamete	Tap depth
15	M5	8
20	M6	10
25	M6	12
30	M8	15
35	M8	17
45	M12	20
65	M20	30

Model number coding

4 SCR35 KKHH C0 +1000L P K/1000L P

Symbol for tapped-hole LM rail type

EPF

Caged Ball LM Guide Finite stroke Model EPF

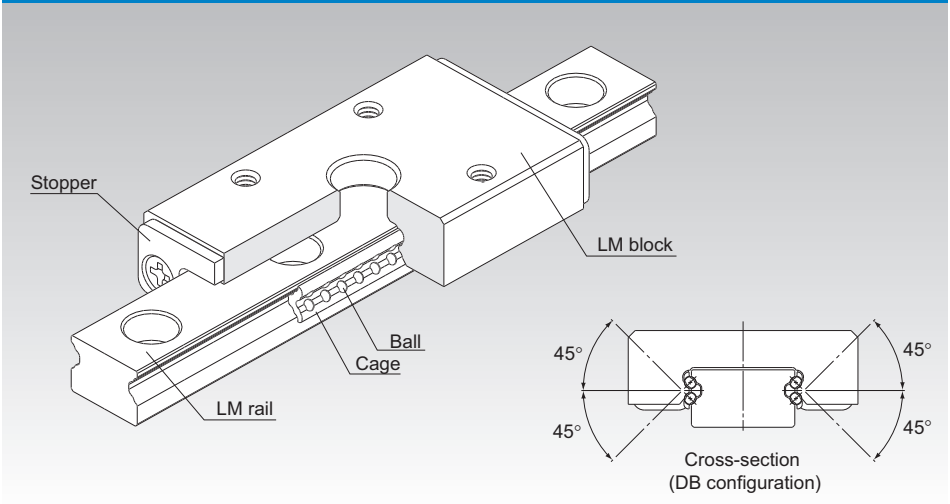

*For the ball cage, see A1-88.

Point of Selection A1-10

Point of Design A1-434

Options A1-457

Model No. A1-522

Precautions on Use A1-528

Accessories for Lubrication A24-1

Mounting Procedure and Maintenance B1-89

Equivalent moment factor A1-43

Rated Loads in All Directions A1-58

Equivalent factor in each direction A1-60

Radial Clearance A1-72

Accuracy Standards A1-85

Shoulder Height of the Mounting Base and the Corner Radius A1-445

Accuracy of the Mounting Surface A1-173

Dimensions of Each Model with an Option Attached A1-470

Structure and Features

Balls are held in cages with spherical ball holders and the balls roll in four rows of circular-arc grooves in raceways on precision-ground LM rails and LM blocks.

[Smooth motion]
Because a finite stroke is used, balls do not circulate and movement is smooth even with pre-loading. Also, because variations in rolling resistance are small, this model is ideal for locations where smooth movement is required with a short stroke.

[High Rigidity]
Because model EPF uses a DB construction featuring 4 rows of circular-arc grooves, it offers particularly high rigidity with respect to moment in the M_C direction. This makes it ideal for locations where M_C moment is applied with one rail.

[Miniature Type]
Because the mounting method is compatible with the Miniature LM Guide Model RSR-N, the models are dimensionally interchangeable.

[4-way Equal Load]
Each row of balls is configured at a contact angle of 45° so that the rated loads applied to the LM block are uniform in the all directions (radial, reverse radial and lateral directions), enabling the LM Guide to be used in all orientations and in extensive applications.

[Ball cage technology application 1]
Because the cage is formed out of plastic resin, there is no metal contact between the cage and the balls, providing excellent noise characteristics, low dust emissions and long product life.

[Ball cage technology application 2]
Forming the cage in a spherical shape out of plastic resin allows lubricant to be held in grease pockets, enabling long periods of maintenance-free operation.

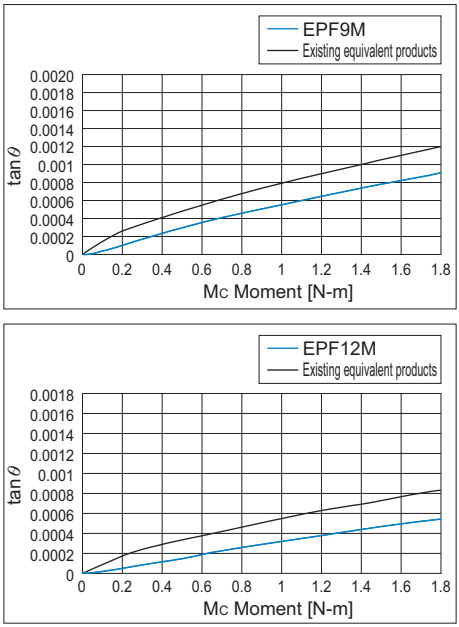

Fig.1 Comparison of M_C moment test data

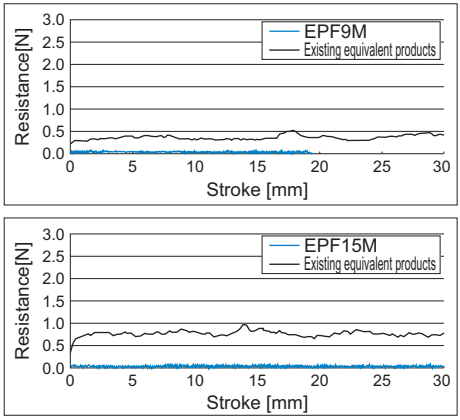

Fig.2 Comparison of rolling resistance test data

Types and Features

Model EPF

Specification Table⇒A1-174

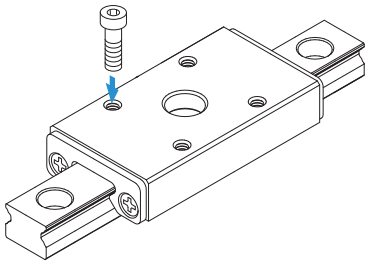

Accuracy of the Mounting Surface

If there is not sufficient precision in the LM rail and LM block mounting surfaces, the product may not function to its full potential.Table1 Machine to values no higher than those shown in... (Recommended value: 70% of Table1)

Table1 Flatness of the LM Rail and the LM Block Mounting Surface

Unit: mm

Model No.	Flatness error
EPF 7M, 9M	0.015/200
EPF 12M	0.025/200
EPF 15M	0.035/200

Note) It is recommended that highly rigid materials such as iron or cast metal be used as the mounting material.
If a material with poor rigidity, such as aluminum, is used, unforeseen loading may be applied to the product. In such situations, contact THK.

Model EPF

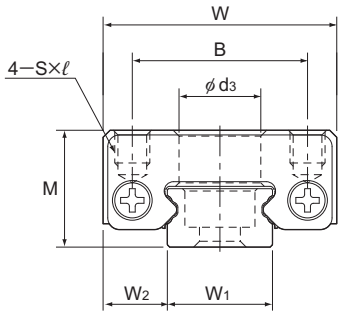

Model No.	Outer dimensions			LM block dimensions					LM rail dimensions		
	Height	Width	Length								
	M	W	L_B	B	C	d_3	S×ℓ	L_{B1}	W_1	W_2	M_1
EPF 7M	8	17	31.6	12	13	5	M2×2.3	29.6	7	5	5
EPF 9M	10	20	37.8	15	16	7	M3×2.8	35.8	9	5.5	5
EPF 12M	13	27	43.7	20	20	7	M3×3.2	41.7	12	7.5	6.75
EPF 15M	16	32	56.5	25	25	7	M3×3.5	54.5	15	8.5	9

Model number coding

EPF7M* 16 +55L P M

- EPF7M*: Model No.
- 16: Guaranteed stroke (in mm)
- +55L: LM rail length (in mm)
- P: Accuracy symbol (*1)
- M: Rail material: Stainless steel (standard)

(*1) See A1-85.

Note) ∗: Stainless steel is the standard material used for LM blocks.
This model number denotes one set consists of an LM block and LM rail.

Download data by searching for the corresponding model number on the Technical Support site. https://tech.thk.com

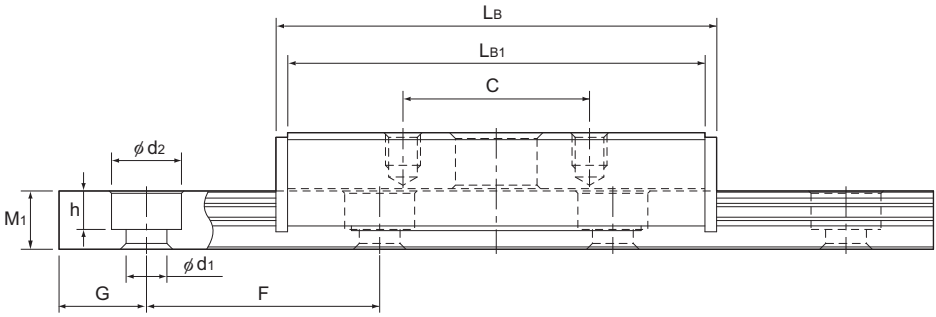

Unit: mm

				Guaranteed stroke	Basic load rating		Static permissible moment N•m*			Mass	
	G	F	$d_1 \times d_2 \times h$	S_T	C kN	C_0 kN	M_A	M_B	M_C	LM block kg	LM rail kg/m
	5	15	2.4×4.2×2.6	16	0.90	1.60	5.08	5.08	5.26	0.019	0.230
	7.5	20	3.5×6×3.3	21	1.00	1.87	6.81	6.81	7.89	0.036	0.290
	10	25	3.5×6×3.8	27	2.26	3.71	15.5	15.5	20.8	0.074	0.550
	15	40	3.5×6×4	34	3.71	5.88	33.0	33.0	41.3	0.136	0.940

Note) THK AFJ grease is provided as the standard grease.
Static permissible moment*: Static permissible moment value with 1 LM block

Recommended Tightening Torques of Mounting Bolts

Unit: N-m

Model No.	Nominal bolt	Rated tightening torque		
		Iron	Casting	Aluminum
EPF 7M	M2	0.588	0.392	0.294
EPF 9M	M3	1.96	1.27	0.98
EPF 12M				
EPF 15M				

Table2 Maximum slip resistance

Unit: N

Model No.	Maximum slip resistance
EPF 7M	20
EPF 9M	20
EPF 12M	30
EPF 15M	30

Note) While the cage used to hold the balls is designed to operate extremely precisely, factors such as impacts or inertial moment or drive vibration from the machine can cause cage distortion.
If using the EPF LM guide in the following conditions, contact THK.
- Vertical Orientation
- Under a large moment load
- Butting the guide's external stopper with the table
- For applications involving high acceleration/deceleration

If cage distortion occurs, the cage must be forcibly restored to its original shape.
Table 1 shows the required slip resistance in this event. Set the thrust so that it is no less than the maximum value shown in the table.

Options⇒A1-457

Standard Length of the LM Rail

Table3 shows the standard LM rail lengths of model EPF.
For special rail lengths, it is recommended to use a value corresponding to the G dimension from the table. As the G dimension increases, this portion becomes less stable and the accuracy performance is severely impacted.

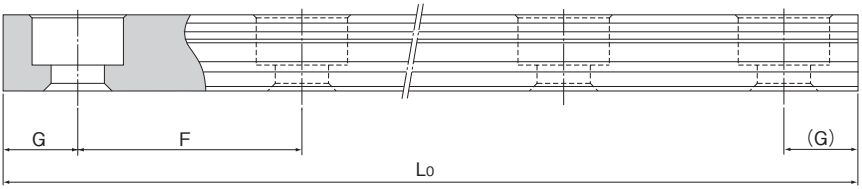

Table3 Standard Length of the LM Rail for Model EPF

Unit: mm

Model No.	EPF 7M	EPF 9M	EPF 12M	EPF 15M
LM rail standard length (L_0)	55	75	95	110
Standard pitch F	15	20	25	40
G	5	7.5	10	15

Note) Lengths other than the standard LM rail length (L_0) are also available. Contact THK for details.

HSR

LM Guide Global Standard Size Model HSR

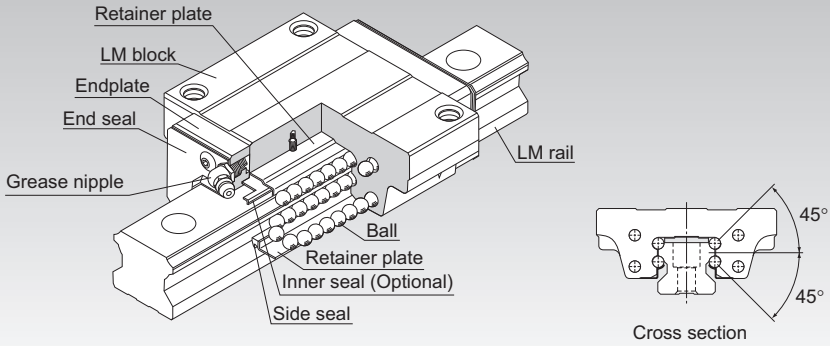

Point of Selection A1-10

Point of Design A1-434

Options A1-457

Model No. A1-522

Precautions on Use A1-528

Accessories for Lubrication A24-1

Mounting Procedure and Maintenance B1-89

Equivalent moment factor A1-43

Rated Loads in All Directions A1-58

Equivalent factor in each direction A1-60

Radial Clearance A1-71

Accuracy Standards A1-76

Shoulder Height of the Mounting Base and the Corner Radius A1-445

Permissible Error of the Mounting Surface A1-450

Dimensions of Each Model with an Option Attached A1-470

Structure and Features

Balls roll in four rows of raceways precision-ground on an LM rail and an LM block, and endplates incorporated in the LM block allow the balls to circulate.
Since retainer plates hold the balls, they do not fall off even if the LM rail is pulled out (except models HSR 8, 10 and 12).
Each row of balls is placed at a contact angle of 45° so that the rated loads applied to the LM block are uniform in the four directions (radial, reverse radial and lateral directions), enabling the LM Guide to be used in all orientations. In addition, the LM block can receive a well-balanced preload, increasing the rigidity in the four directions while maintaining a constant, low friction coefficient. With the low sectional height and the high rigidity design of the LM block, this model achieves highly accurate and stable straight motion.

[4-way Equal Load]
Each row of balls is placed at a contact angle of 45° so that the rated loads applied to the LM block are uniform in the four directions (radial, reverse radial and lateral directions), enabling the LM Guide to be used in all orientations and in extensive applications.

[High Rigidity Type]
Since balls are arranged in four rows in a well-balanced manner, a large preload can be applied and the rigidity in four directions can easily be increased.

[Self-adjustment Capability]
The self-adjustment capability through front-to-front configuration of THK's unique circular-arc grooves (DF set) enables a mounting error to be absorbed even under a preload, thus to achieve highly accurate, smooth straight motion.

[High Durability]
Even under a preload or excessive biased load, differential slip of balls does not occur. As a result, smooth motion, high wear resistance, and long-term maintenance of accuracy are achieved.

[Stainless Steel Type also Available]
A special type which LM block, LM rail and balls are made of stainless steel is also available.

Types

Model HSR-A

Specification Table⇒A1-184

The flange of its LM block has tapped holes.

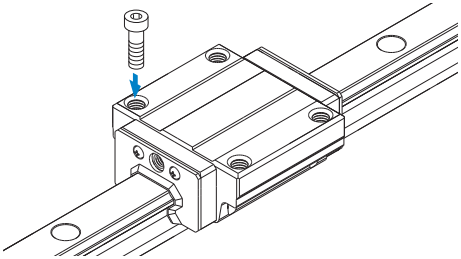

Model HSR-B

Specification Table⇒A1-186

The flange of the LM block has through holes. Used in places where the table cannot have through holes for mounting bolts.

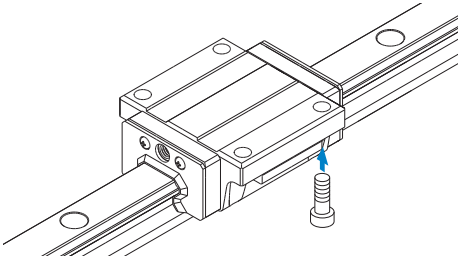

Model HSR-R

Specification Table⇒A1-190

Having a smaller LM block width (W) and tapped holes, this model is optimal for compact design.

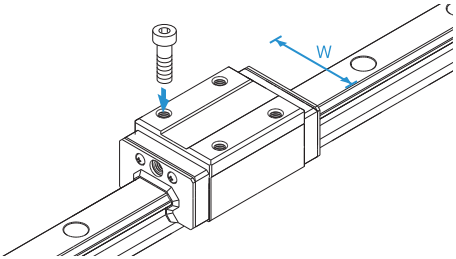

Model HSR-YR

Specification Table⇒A1-192

When using two units of LM Guide facing each other, the previous model required much time in machining the table and had difficulty achieving the desired accuracy and adjusting the clearance. Since model HSR-YR has tapped holes on the side of the LM block, a simpler structure is gained and reduced man-hour and increase in accuracy can be achieved.

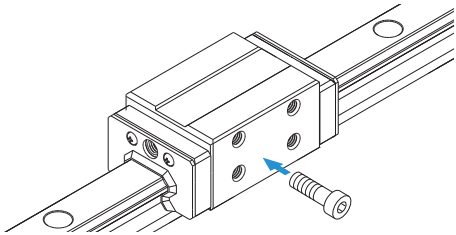

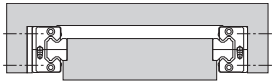

Fig.1 Conventional Structure

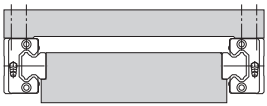

Fig.2 Mounting Structure for Model HSR-YR

Model HSR-LA

Specification Table⇒A1-184

The LM block has the same cross-sectional shape as model HSR-A, but has a longer overall LM block length (L) and a greater rated load.

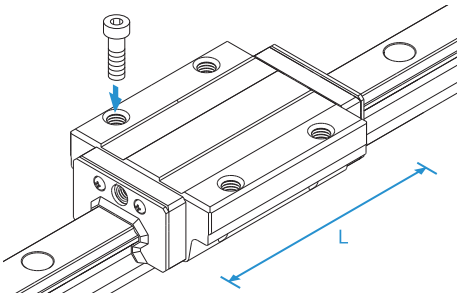

Model HSR-LB

Specification Table⇒A1-186

The LM block has the same cross-sectional shape as model HSR-B, but has a longer overall LM block length (L) and a greater rated load.

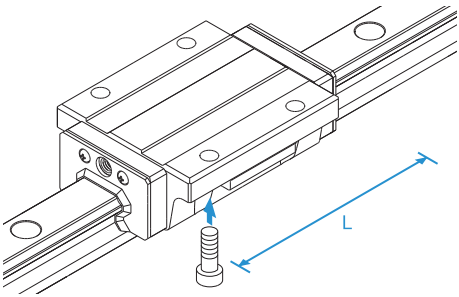

Model HSR-LR

Specification Table⇒A1-190

The LM block has the same cross-sectional shape as model HSR-R, but has a longer overall LM block length (L) and a greater rated load.

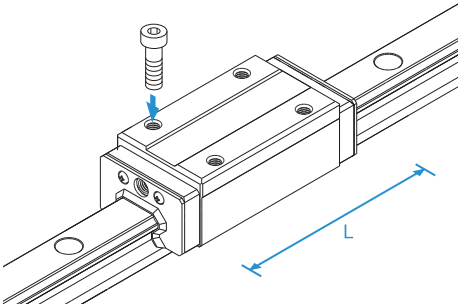

Model HSR-CA

Specification Table⇒A1-194

Has six tapped holes on the LM block.

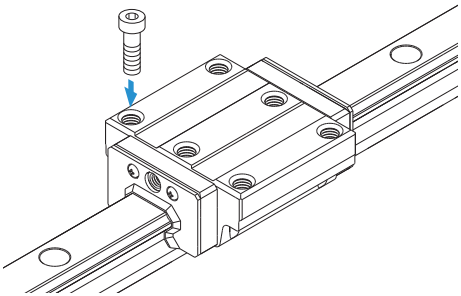

Model HSR-CB

Specification Table⇒A1-196

The LM block has six through holes. Used in places where the table cannot have through holes for mounting bolts.

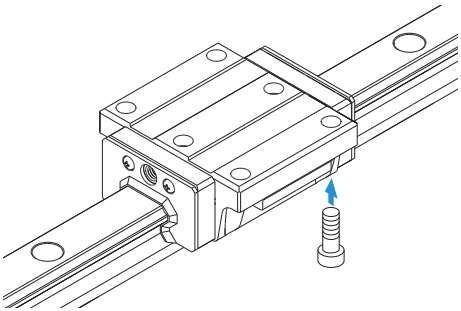

Model HSR-HA

Specification Table⇒A1-194

The LM block has the same cross-sectional shape as model HSR-CA, but has a longer overall LM block length (L) and a greater rated load.

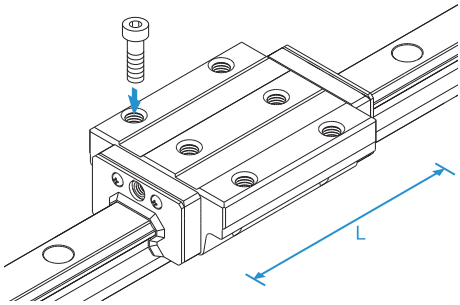

Model HSR-HB

Specification Table⇒A1-196

The LM block has the same cross sectional shape as model HSR-CB, but has a longer overall LM block length (L) and a greater rated load.

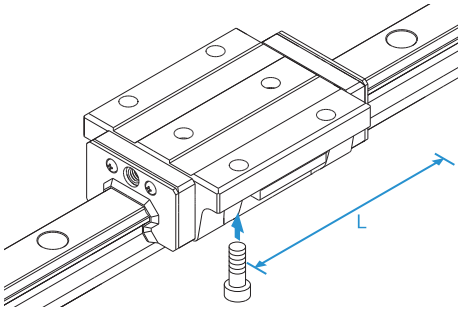

Models HSR 100/120/150 HA/HB/HR

Specification Table⇒A1-198

Large types of model HSR that can be used in large-scale machine tools and building structures.

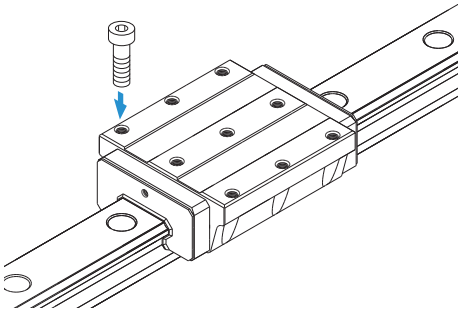

Models HSR-A and HSR-AM, Models HSR-LA and HSR-LAM

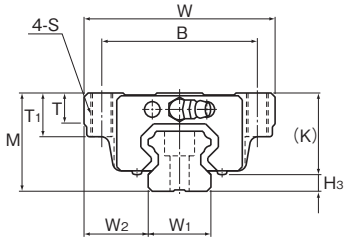

Models HSR15 to 35A/LA/AM/LAM

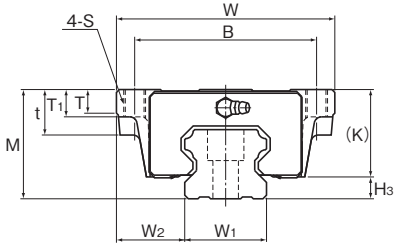

Models HSR45 to 85A/LA

Model No.	Outer dimensions			LM block dimensions											
	Height M	Width W	Length L	B	C	S	L_1	t	T	T_1	K	N	E	Grease nipple	H_3
HSR 15A HSR 15AM	24	47	56.6	38	30	M5	38.8	—	7	11	19.3	4.3	5.5	PB1021B	4.7
HSR 20A HSR 20AM	30	63	74	53	40	M6	50.8	—	9.5	10	26	5	12	B-M6F	4
HSR 20LA HSR 20LAM	30	63	90	53	40	M6	66.8	—	9.5	10	26	5	12	B-M6F	4
HSR 25A HSR 25AM	36	70	83.1	57	45	M8	59.5	—	11	16	30.5	6	12	B-M6F	5.5
HSR 25LA HSR 25LAM	36	70	102.2	57	45	M8	78.6	—	11	16	30.5	6	12	B-M6F	5.5
HSR 30A HSR 30AM	42	90	98	72	52	M10	70.4	—	9	18	35	7	12	B-M6F	7
HSR 30LA HSR 30LAM	42	90	120.6	72	52	M10	93	—	9	18	35	7	12	B-M6F	7
HSR 35A HSR 35AM	48	100	109.4	82	62	M10	80.4	—	12	21	40.5	8	12	B-M6F	7.5
HSR 35LA HSR 35LAM	48	100	134.8	82	62	M10	105.8	—	12	21	40.5	8	12	B-M6F	7.5
HSR 45A HSR 45LA	60	120	139 170.8	100	80	M12	98 129.8	25	13	15	50	10	16	B-PT1/8	10
HSR 55A HSR 55LA	70	140	163 201.1	116	95	M14	118 156.1	29	13.5	17	57	11	16	B-PT1/8	13
HSR 65A HSR 65LA	90	170	186 245.5	142	110	M16	147 206.5	37	21.5	23	76	19	16	B-PT1/8	14
HSR 85A HSR 85LA	110	215	245.6 303	185	140	M20	178.6 236	55	28	30	94	23	16	B-PT1/8	16

Model number coding

HSR25 A 2 QZ UU C0 M +1200L P T M -Ⅱ

- HSR25: Model number
- A: Type of LM block
- 2: No. of LM blocks used on the same rail
- QZ: With QZ Lubricator
- UU: Contamination protection accessory symbol (*1)
- C0: Radial clearance symbol (*2)
  - Normal (No symbol)
  - Light preload (C1)
  - Medium preload (C0)
- M: Stainless steel LM block
- +1200L: LM rail length (in mm)
- P: Accuracy symbol (*3)
  - Normal grade (No Symbol)/High accuracy grade (H)
  - Precision grade (P)/Super precision grade (SP)
  - Ultra precision grade (UP)
- T: Symbol for LM rail jointed use
- M: Stainless steel LM rail
- -Ⅱ: Symbol for No. of rails used on the same plane (*4)

(*1) See contamination protection accessory on A1-494. (*2) See A1-71. (*3) See A1-76. (*4) See A1-13.

Note) This model number indicates that a single-rail unit constitutes one set. (i.e., required number of sets when 2 rails are used in parallel is 2 at a minimum.)
Those models equipped with QZ Lubricator cannot have a grease nipple. When desiring a grease nipple for a model attached with QZ, contact THK.

Download data by searching for the corresponding model number on the Technical Support site. https://tech.thk.com

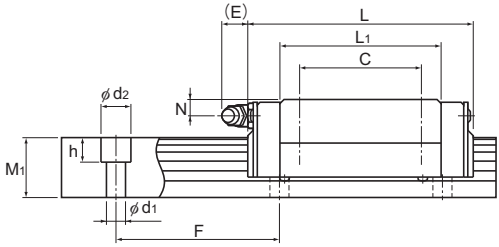

Unit: mm

	LM rail dimensions						Basic load rating		Static permissible moment kN-m*					Mass	
	Width		Height	Pitch		Length*	C	C_0	M_A		M_B		M_C	LM block	LM rail
	W_1 ±0.05	W_2	M_1	F	$d_1 \times d_2 \times h$	Max	kN	kN	1 block	Double blocks	1 block	Double blocks	1 block	kg	kg/m
	15	16	15	60	4.5×7.5×5.3	3000 (1240)	10.9	15.7	0.0945	0.527	0.0945	0.527	0.0998	0.2	1.5
	20	21.5	18	60	6×9.5×8.5	3000 (1480)	19.8	27.4	0.218	1.2	0.218	1.2	0.235	0.35	2.3
	20	21.5	18	60	6×9.5×8.5	3000 (1480)	23.9	35.8	0.363	1.87	0.363	1.87	0.307	0.47	2.3
	23	23.5	22	60	7×11×9	3000 (2020)	27.6	36.4	0.324	1.8	0.324	1.8	0.366	0.59	3.3
	23	23.5	22	60	7×11×9	3000 (2020)	35.2	51.6	0.627	3.04	0.627	3.04	0.518	0.75	3.3
	28	31	26	80	9×14×12	3000 (2520)	40.5	53.7	0.599	3.1	0.599	3.1	0.652	1.1	4.8
	28	31	26	80	9×14×12	3000 (2520)	48.9	70.2	0.995	4.89	0.995	4.89	0.852	1.3	4.8
	34	33	29	80	9×14×12	3000 (2520)	53.9	70.2	0.895	4.51	0.895	4.51	1.05	1.6	6.6
	34	33	29	80	9×14×12	3000 (2520)	65	91.7	1.49	7.13	1.49	7.13	1.37	2	6.6
	45	37.5	38	105	14×20×17	3090	82.2 100	101 135	1.5 2.59	8.37 13.4	1.5 2.59	8.37 13.4	1.94 2.6	2.8 3.3	11
	53	43.5	44	120	16×23×20	3060	121 148	146 194	2.6 4.46	14.1 22.7	2.6 4.46	14.1 22.7	3.43 4.56	4.5 5.7	15.1
	63	53.5	53	150	18×26×22	3000	195 249	228 323	5.08 9.81	25 45.6	5.08 9.81	25 45.6	6.2 8.79	8.5 10.7	22.5
	85	65	65	180	24×35×28	3000	304 367	355 464	10.2 16.9	51.2 81	10.2 16.9	51.2 81	12.8 16.7	17 23	35.2

Note) Symbol M indicates that stainless steel is used in the LM block, LM rail and balls. Those models marked with this symbol are therefore highly resistant to corrosion and environment.
The maximum length under "Length*" indicates the standard maximum length of an LM rail. (See A1-200.)
Static permissible moment*: 1 block: static permissible moment value with 1 LM block
Double blocks: static permissible moment value with 2 blocks closely contacting with each other

Options⇒A1-457

Models HSR-B, HSR-BM, HSR-LB and HSR-LBM

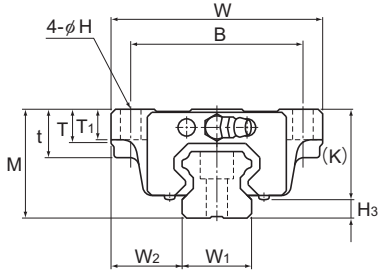

Model No.	Outer dimensions			LM block dimensions											
	Height M	Width W	Length L	B	C	H	L_1	t	T	T_1	K	N	E	Grease nipple	H_3
HSR 15B HSR 15BM	24	47	56.6	38	30	4.5	38.8	11	7	7	19.3	4.3	5.5	PB1021B	4.7
HSR 20B HSR 20BM	30	63	74	53	40	6	50.8	10	9.5	10	26	5	12	B-M6F	4
HSR 20LB HSR 20LBM	30	63	90	53	40	6	66.8	10	9.5	10	26	5	12	B-M6F	4
HSR 25B HSR 25BM	36	70	83.1	57	45	7	59.5	16	11	10	30.5	6	12	B-M6F	5.5
HSR 25LB HSR 25LBM	36	70	102.2	57	45	7	78.6	16	11	10	30.5	6	12	B-M6F	5.5
HSR 30B HSR 30BM	42	90	98	72	52	9	70.4	18	9	10	35	7	12	B-M6F	7
HSR 30LB HSR 30LBM	42	90	120.6	72	52	9	93	18	9	10	35	7	12	B-M6F	7
HSR 35B HSR 35BM	48	100	109.4	82	62	9	80.4	21	12	13	40.5	8	12	B-M6F	7.5
HSR 35LB HSR 35LBM	48	100	134.8	82	62	9	105.8	21	12	13	40.5	8	12	B-M6F	7.5
HSR 45B HSR 45LB	60	120	139 170.8	100	80	11	98 129.8	25	13	15	50	10	16	B-PT1/8	10
HSR 55B HSR 55LB	70	140	163 201.1	116	95	14	118 156.1	29	13.5	17	57	11	16	B-PT1/8	13
HSR 65B HSR 65LB	90	170	186 245.5	142	110	16	147 206.5	37	21.5	23	76	19	16	B-PT1/8	14
HSR 85B HSR 85LB	110	215	245.6 303	185	140	18	178.6 236	55	28	30	94	23	16	B-PT1/8	16

Model number coding

HSR25 B 2 QZ UU C0 M +1200L P T M -Ⅱ

- HSR25: Model number
- B: Type of LM block
- 2: No. of LM blocks used on the same rail
- QZ: With QZ Lubricator
- UU: Contamination protection accessory symbol (*1)
- C0: Radial clearance symbol (*2)
  - Normal (No symbol)
  - Light preload (C1)
  - Medium preload (C0)
- M: Stainless steel LM block
- +1200L: LM rail length (in mm)
- P: Accuracy symbol (*3)
  - Normal grade (No Symbol)/High accuracy grade (H)
  - Precision grade (P)/Super precision grade (SP)
  - Ultra precision grade (UP)
- T: Symbol for LM rail jointed use
- M: Stainless steel LM rail
- -Ⅱ: Symbol for No. of rails used on the same plane (*4)

(*1) See contamination protection accessory on A1-494. (*2) See A1-71. (*3) See A1-76. (*4) See A1-13.

Note) This model number indicates that a single-rail unit constitutes one set. (i.e., required number of sets when 2 rails are used in parallel is 2 at a minimum.)
Those models equipped with QZ Lubricator cannot have a grease nipple. When desiring a grease nipple for a model attached with QZ, contact THK.

Download data by searching for the corresponding model number on the Technical Support site. https://tech.thk.com

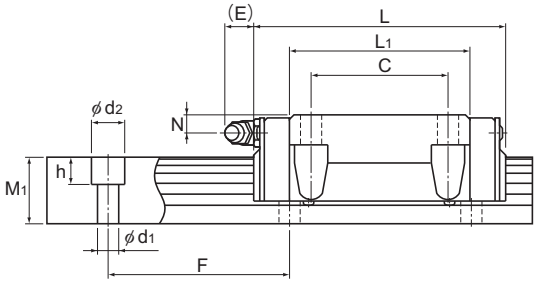

Unit: mm

	LM rail dimensions						Basic load rating		Static permissible moment kN-m*					Mass	
	Width		Height	Pitch		Length*	C	C_0	M_A		M_B		M_C	LM block	LM rail
	W_1 ±0.05	W_2	M_1	F	$d_1 \times d_2 \times h$	Max	kN	kN	1 block	Double blocks	1 block	Double blocks	1 block	kg	kg/m
	15	16	15	60	4.5×7.5×5.3	3000 (1240)	10.9	15.7	0.0945	0.527	0.0945	0.527	0.0998	0.2	1.5
	20	21.5	18	60	6×9.5×8.5	3000 (1480)	19.8	27.4	0.218	1.2	0.218	1.2	0.235	0.35	2.3
	20	21.5	18	60	6×9.5×8.5	3000 (1480)	23.9	35.8	0.363	1.87	0.363	1.87	0.307	0.47	2.3
	23	23.5	22	60	7×11×9	3000 (2020)	27.6	36.4	0.324	1.8	0.324	1.8	0.366	0.59	3.3
	23	23.5	22	60	7×11×9	3000 (2020)	35.2	51.6	0.627	3.04	0.627	3.04	0.518	0.75	3.3
	28	31	26	80	9×14×12	3000 (2520)	40.5	53.7	0.599	3.1	0.599	3.1	0.652	1.1	4.8
	28	31	26	80	9×14×12	3000 (2520)	48.9	70.2	0.995	4.89	0.995	4.89	0.852	1.3	4.8
	34	33	29	80	9×14×12	3000 (2520)	53.9	70.2	0.895	4.51	0.895	4.51	1.05	1.6	6.6
	34	33	29	80	9×14×12	3000 (2520)	65	91.7	1.49	7.13	1.49	7.13	1.37	2	6.6
	45	37.5	38	105	14×20×17	3090	82.2 100	101 135	1.5 2.59	8.37 13.4	1.5 2.59	8.37 13.4	1.94 2.6	2.8 3.3	11
	53	43.5	44	120	16×23×20	3060	121 148	146 194	2.6 4.46	14.1 22.7	2.6 4.46	14.1 22.7	3.43 4.56	4.5 5.7	15.1
	63	53.5	53	150	18×26×22	3000	195 249	228 323	5.08 9.81	25 45.6	5.08 9.81	25 45.6	6.2 8.79	8.5 10.7	22.5
	85	65	65	180	24×35×28	3000	304 367	355 464	10.2 16.9	51.2 81	10.2 16.9	51.2 81	12.8 16.7	17 23	35.2

Note) Symbol M indicates that stainless steel is used in the LM block, LM rail and balls. Those models marked with this symbol are therefore highly resistant to corrosion and environment.
The maximum length under "Length*" indicates the standard maximum length of an LM rail. (See A1-200.)
Static permissible moment*: 1 block: static permissible moment value with 1 LM block
Double blocks: static permissible moment value with 2 blocks closely contacting with each other

Options⇒A1-457

Model HSR-RM

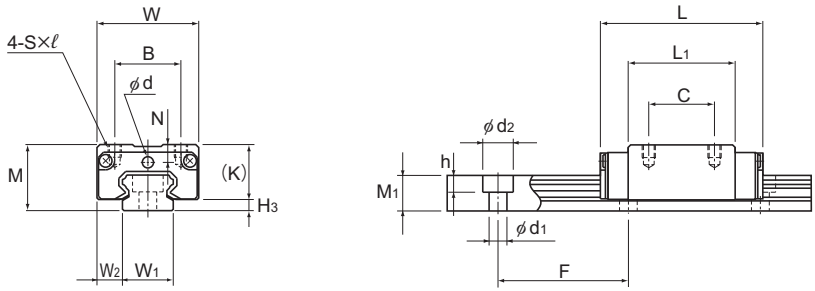

Models HSR8RM and 10RM

Model No.	Outer dimensions			LM block dimensions										
	Height M	Width W	Length L	B	C	S×ℓ	L_1	T	K	N	E	Greasing hole d	Grease nipple	H_3
HSR 8RM	11	16	24	10	10	M2×2.5	15	—	8.9	2.6	—	2.2	—	2.1
HSR 10RM	13	20	31	13	12	M2.6×2.5	20.1	—	10.8	3.5	—	2.5	—	2.2
HSR 12RM	20	27	45	15	15	M4×4.5	30.5	6	16.9	5.2	4	—	PB107	3.1

Model number coding

HSR12 R 2 UU C1 M +670L H T M -Ⅱ

- HSR12: Model number
- R: Type of LM block
- 2: No. of LM blocks used on the same rail
- UU: Contamination protection accessory symbol (*1)
- C1: Radial clearance symbol (*2) Normal (No symbol) Light preload (C1)
- M: Stainless steel LM block
- +670L: LM rail length (in mm)
- H: Accuracy symbol (*3) Normal grade (No Symbol)/High accuracy grade (H) Precision grade (P)/Super precision grade (SP)
- T: Symbol for LM rail jointed use
- M: Stainless steel LM rail
- -Ⅱ: Symbol for No. of rails used on the same plane (*4)

(*1) See contamination protection accessory on A1-494. (*2) See A1-71. (*3) See A1-76. (*4) See A1-13.

Note) This model number indicates that a single-rail unit constitutes one set. (i.e., required number of sets when 2 rails are used in parallel is 2 at a minimum.)

Download data by searching for the corresponding model number on the Technical Support site. https://tech.thk.com

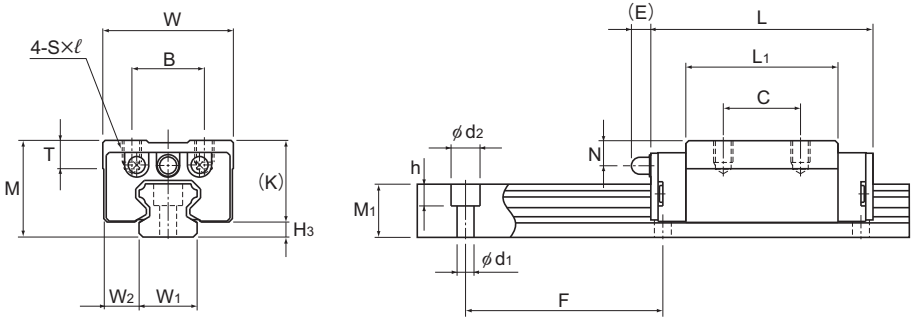

Model HSR12RM

Unit: mm

	LM rail dimensions						Basic load rating		Static permissible moment kN-m*					Mass	
	Width		Height	Pitch		Length*	C	C_0	M_A		M_B		M_C	LM block	LM rail
	W_1 ±0.05	W_2	M_1	F	$d_1 \times d_2 \times h$	Max	kN	kN	1 block	Double blocks	1 block	Double blocks	1 block	kg	kg/m
	8	4	6	20	2.4×4.2×2.3	(975)	1.08	2.16	0.00492	0.0319	0.00492	0.0319	0.00727	0.012	0.3
	10	5	7	25	3.5×6×3.3	(995)	1.96	3.82	0.0123	0.0716	0.0123	0.0716	0.0162	0.025	0.45
	12	7.5	11	40	3.5×6×4.5	(1240)	4.7	8.53	0.0409	0.228	0.0409	0.228	0.0445	0.08	0.83

Note) Since stainless steel is used in the LM block, LM rail and balls, these models are highly resistant to corrosion and environment.
The maximum length under "Length*" indicates the standard maximum length of an LM rail. (See A1-200.)
Static permissible moment*: 1 block: static permissible moment value with 1 LM block
Double blocks: static permissible moment value with 2 blocks closely contacting with each other

Options⇒A1-457

Models HSR-R, HSR-RM, HSR-LR and HSR-LRM

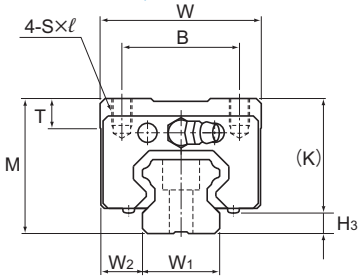

Model No.	Outer dimensions			LM block dimensions									
	Height M	Width W	Length L	B	C	S×ℓ	L_1	T	K	N	E	Grease nipple	H_3
HSR 15R HSR 15RM	28	34	56.6	26	26	M4×5	38.8	6	23.3	8.3	5.5	PB1021B	4.7
HSR 20R HSR 20RM	30	44	74	32	36	M5×6	50.8	8	26	5	12	B-M6F	4
HSR 20LR HSR 20LRM	30	44	90	32	50	M5×6	66.8	8	26	5	12	B-M6F	4
HSR 25R HSR 25RM	40	48	83.1	35	35	M6×8	59.5	9	34.5	10	12	B-M6F	5.5
HSR 25LR HSR 25LRM	40	48	102.2	35	50	M6×8	78.6	9	34.5	10	12	B-M6F	5.5
HSR 30R HSR 30RM	45	60	98	40	40	M8×10	70.4	9	38	10	12	B-M6F	7
HSR 30LR HSR 30LRM	45	60	120.6	40	60	M8×10	93	9	38	10	12	B-M6F	7
HSR 35R HSR 35RM	55	70	109.4	50	50	M8×12	80.4	11.7	47.5	15	12	B-M6F	7.5
HSR 35LR HSR 35LRM	55	70	134.8	50	72	M8×12	105.8	11.7	47.5	15	12	B-M6F	7.5
HSR 45R HSR 45LR	70	86	139 170.8	60	60 80	M10×17	98 129.8	15	60	20	16	B-PT1/8	10
HSR 55R HSR 55LR	80	100	163 201.1	75	75 95	M12×18	118 156.1	20.5	67	21	16	B-PT1/8	13
HSR 65R HSR 65LR	90	126	186 245.5	76	70 120	M16×20	147 206.5	23	76	19	16	B-PT1/8	14
HSR 85R HSR 85LR	110	156	245.6 303	100	80 140	M18×25	178.6 236	29	94	23	16	B-PT1/8	16

Model number coding

HSR35 R 2 QZ SS C0 M +1400L P T M -Ⅱ

- HSR35: Model number
- R: Type of LM block
- 2: No. of LM blocks used on the same rail
- QZ: With QZ Lubricator
- SS: Contamination protection accessory symbol (*1)
- C0: Radial clearance symbol (*2)
  - Normal (No symbol)
  - Light preload (C1)
  - Medium preload (C0)
- M: Stainless steel LM block
- +1400L: LM rail length (in mm)
- P: Accuracy symbol (*3)
  - Normal grade (No Symbol)/High accuracy grade (H)
  - Precision grade (P)/Super precision grade (SP)
  - Ultra precision grade (UP)
- T: Symbol for LM rail jointed use
- M: Stainless steel LM rail
- -Ⅱ: Symbol for No. of rails used on the same plane (*4)

(*1) See contamination protection accessory on A1-494. (*2) See A1-71. (*3) See A1-76. (*4) See A1-13.

Note) This model number indicates that a single-rail unit constitutes one set. (i.e., required number of sets when 2 rails are used in parallel is 2 at a minimum.)
Those models equipped with QZ Lubricator cannot have a grease nipple. When desiring a grease nipple for a model attached with QZ, contact THK.

Download data by searching for the corresponding model number on the Technical Support site. https://tech.thk.com

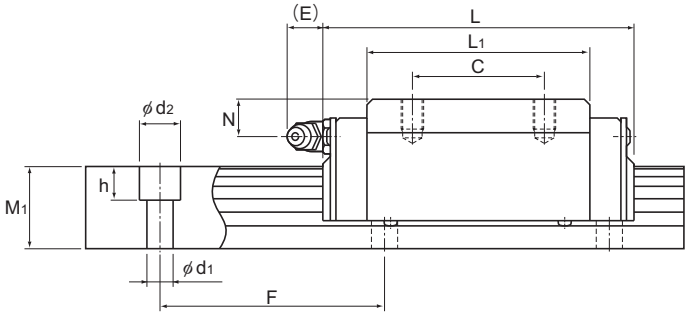

Unit: mm

LM rail dimensions						Basic load rating		Static permissible moment kN-m*					Mass	
Width		Height	Pitch		Length*	C	C_0	M_A		M_B		M_C	LM block	LM rail
W_1 ±0.05	W_2	M_1	F	$d_1 \times d_2 \times h$	Max	kN	kN	1 block	Double blocks	1 block	Double blocks	1 block	kg	kg/m
15	9.5	15	60	4.5×7.5×5.3	3000 (1240)	10.9	15.7	0.0945	0.527	0.0945	0.527	0.0998	0.18	1.5
20	12	18	60	6×9.5×8.5	3000 (1480)	19.8	27.4	0.218	1.2	0.218	1.2	0.235	0.25	2.3
20	12	18	60	6×9.5×8.5	3000 (1480)	23.9	35.8	0.363	1.87	0.363	1.87	0.307	0.35	2.3
23	12.5	22	60	7×11×9	3000 (2020)	27.6	36.4	0.324	1.8	0.324	1.8	0.366	0.54	3.3
23	12.5	22	60	7×11×9	3000 (2020)	35.2	51.6	0.627	3.04	0.627	3.04	0.518	0.67	3.3
28	16	26	80	9×14×12	3000 (2520)	40.5	53.7	0.599	3.1	0.599	3.1	0.652	0.9	4.8
28	16	26	80	9×14×12	3000 (2520)	48.9	70.2	0.995	4.89	0.995	4.89	0.852	1.1	4.8
34	18	29	80	9×14×12	3000 (2520)	53.9	70.2	0.895	4.51	0.895	4.51	1.05	1.5	6.6
34	18	29	80	9×14×12	3000 (2520)	65	91.7	1.49	7.13	1.49	7.13	1.37	2	6.6
45	20.5	38	105	14×20×17	3090	82.2 100	101 135	1.5 2.59	8.37 13.4	1.5 2.59	8.37 13.4	1.94 2.6	2.6 3.1	11
53	23.5	44	120	16×23×20	3060	121 148	146 194	2.6 4.46	14.1 22.7	2.6 4.46	14.1 22.7	3.43 4.56	4.3 5.4	15.1
63	31.5	53	150	18×26×22	3000	195 249	228 323	5.08 9.81	25 45.6	5.08 9.81	25 45.6	6.2 8.79	7.3 9.3	22.5
85	35.5	65	180	24×35×28	3000	304 367	355 464	10.2 16.9	51.2 81	10.2 16.9	51.2 81	12.8 16.7	13 16	35.2

Note) Symbol M indicates that stainless steel is used in the LM block, LM rail and balls. Those models marked with this symbol are therefore highly resistant to corrosion and environment.
The maximum length under "Length*" indicates the standard maximum length of an LM rail. (See A1-200.)
Static permissible moment*: 1 block: static permissible moment value with 1 LM block
Double blocks: static permissible moment value with 2 blocks closely contacting with each other

Options⇒A1-457

Models HSR-YR and HSR-YRM

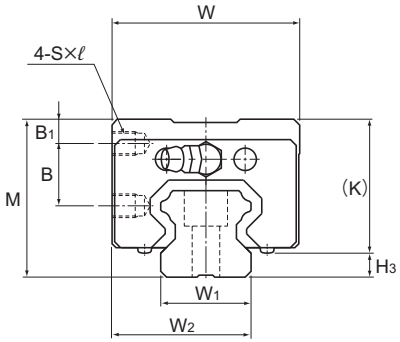

Model No.	Outer dimensions			LM block dimensions									
	Height M	Width W	Length L	B_1	B	C	S×ℓ	L_1	K	N	E	Grease nipple	H_3
HSR 15YR HSR 15YRM	28	33.5	56.6	4.3	11.5	18	M4×5	38.8	23.3	8.3	5.5	PB1021B	4.7
HSR 20YR HSR 20YRM	30	43.5	74	4	11.5	25	M5×6	50.8	26	5	12	B-M6F	4
HSR 25YR HSR 25YRM	40	47.5	83.1	6	16	30	M6×6	59.5	34.5	10	12	B-M6F	5.5
HSR 30YR HSR 30YRM	45	59.5	98	8	16	40	M6×9	70.4	38	10	12	B-M6F	7
HSR 35YR HSR 35YRM	55	69.5	109.4	8	23	43	M8×10	80.4	47.5	15	12	B-M6F	7.5
HSR 45YR	70	85.5	139	10	30	55	M10×14	98	60	20	16	B-PT1/8	10
HSR 55YR	80	99.5	163	12	32	70	M12×15	118	67	21	16	B-PT1/8	13
HSR 65YR	90	124.5	186	12	35	85	M16×22	147	76	19	16	B-PT1/8	14

Model number coding

HSR25 YR 2 UU C0 M +1200L P T M -Ⅱ

- HSR25: Model number
- YR: Type of LM block
- 2: No. of LM blocks used on the same rail
- UU: Contamination protection accessory symbol (*1)
- C0: Radial clearance symbol (*2)
  - Normal (No symbol)
  - Light preload (C1)
  - Medium preload (C0)
- M: Stainless steel LM block
- +1200L: LM rail length (in mm)
- P: Accuracy symbol (*3)
  - Normal grade (No Symbol)/High accuracy grade (H)
  - Precision grade (P)/Super precision grade (SP)
  - Ultra precision grade (UP)
- T: Symbol for LM rail jointed use
- M: Stainless steel LM rail
- Ⅱ: Symbol for No. of rails used on the same plane (*4)

(*1) See contamination protection accessory on A1-494. (*2) See A1-71. (*3) See A1-76. (*4) See A1-13.

Note) This model number indicates that a single-rail unit constitutes one set. (i.e., required number of sets when 2 rails are used in parallel is 2 at a minimum.)

Download data by searching for the corresponding model number on the Technical Support site. https://tech.thk.com

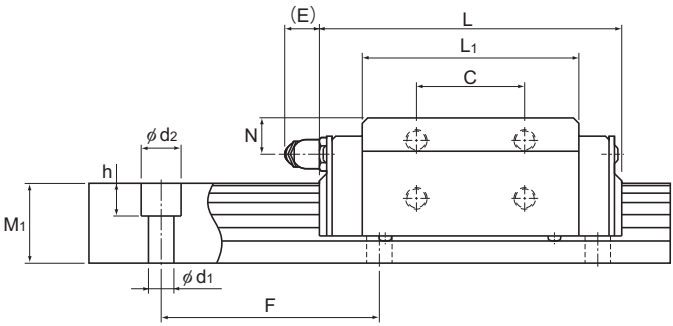

Unit: mm

	LM rail dimensions						Basic load rating		Static permissible moment kN-m*					Mass	
	Width		Height	Pitch		Length*	C	C_0	M_A		M_B		M_C	LM block	LM rail
	W_1 ±0.05	W_2	M_1	F	$d_1 \times d_2 \times h$	Max	kN	kN	1 block	Double blocks	1 block	Double blocks	1 block	kg	kg/m
	15	24	15	60	4.5×7.5×5.3	3000 (1240)	10.9	15.7	0.0945	0.527	0.0945	0.527	0.0998	0.18	1.5
	20	31.5	18	60	6×9.5×8.5	3000 (1480)	19.8	27.4	0.218	1.2	0.218	1.2	0.235	0.25	2.3
	23	35	22	60	7×11×9	3000 (2020)	27.6	36.4	0.324	1.8	0.324	1.8	0.366	0.54	3.3
	28	43.5	26	80	9×14×12	3000 (2520)	40.5	53.7	0.599	3.1	0.599	3.1	0.652	0.9	4.8
	34	51.5	29	80	9×14×12	3000 (2520)	53.9	70.2	0.895	4.51	0.895	4.51	1.05	1.5	6.6
	45	65	38	105	14×20×17	3090	82.2	101	1.5	8.37	1.5	8.37	1.94	2.6	11
	53	76	44	120	16×23×20	3060	121	146	2.6	14.1	2.6	14.1	3.43	4.3	15.1
	63	93	53	150	18×26×22	3000	195	228	5.08	25	5.08	25	6.2	7.3	22.5

Note) Symbol M indicates that stainless steel is used in the LM block, LM rail and balls. Those models marked with this symbol are therefore highly resistant to corrosion and environment.
The maximum length under "Length*" indicates the standard maximum length of an LM rail. (See A1-200.)
Static permissible moment*: 1 block: static permissible moment value with 1 LM block
Double blocks: static permissible moment value with 2 blocks closely contacting with each other

Options⇒A1-457

Models HSR-CA, HSR-CAM, HSR-HA and HSR-HAM

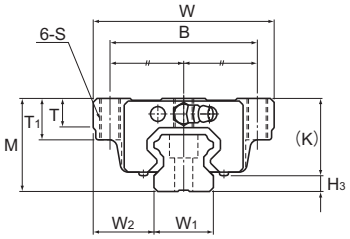

Models HSR20 to 35CA/HA/CAM/HAM

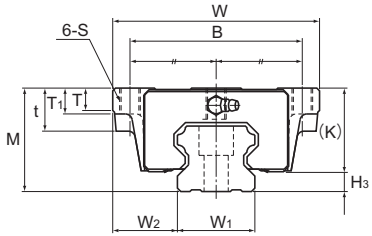

Models HSR45 to 85CA/HA

Model No.	Outer dimensions			LM block dimensions											
	Height M	Width W	Length L	B	C	S	L_1	t	T	T_1	K	N	E	Grease nipple	H_3
HSR 20CA HSR 20CAM	30	63	74	53	40	M6	50.8	—	9.5	10	26	5	12	B-M6F	4
HSR 20HA HSR 20HAM	30	63	90	53	40	M6	66.8	—	9.5	10	26	5	12	B-M6F	4
HSR 25CA HSR 25CAM	36	70	83.1	57	45	M8	59.5	—	11	16	30.5	6	12	B-M6F	5.5
HSR 25HA HSR 25HAM	36	70	102.2	57	45	M8	78.6	—	11	16	30.5	6	12	B-M6F	5.5
HSR 30CA HSR 30CAM	42	90	98	72	52	M10	70.4	—	9	18	35	7	12	B-M6F	7
HSR 30HA HSR 30HAM	42	90	120.6	72	52	M10	93	—	9	18	35	7	12	B-M6F	7
HSR 35CA HSR 35CAM	48	100	109.4	82	62	M10	80.4	—	12	21	40.5	8	12	B-M6F	7.5
HSR 35HA HSR 35HAM	48	100	134.8	82	62	M10	105.8	—	12	21	40.5	8	12	B-M6F	7.5
HSR 45CA HSR 45HA	60	120	139 170.8	100	80	M12	98 129.8	25	13	15	50	10	16	B-PT1/8	10
HSR 55CA HSR 55HA	70	140	163 201.1	116	95	M14	118 156.1	29	13.5	17	57	11	16	B-PT1/8	13
HSR 65CA HSR 65HA	90	170	186 245.5	142	110	M16	147 206.5	37	21.5	23	76	19	16	B-PT1/8	14
HSR 85CA HSR 85HA	110	215	245.6 303	185	140	M20	178.6 236	55	28	30	94	23	16	B-PT1/8	16

Model number coding

HSR25 HA 2 QZ KKHH C0 M +1300L P T M -Ⅱ

- HSR25: Model number
- HA: Type of LM block
- 2: No. of LM blocks used on the same rail
- QZ: With QZ Lubricator
- KKHH: Contamination protection accessory symbol (*1)
- C0: Radial clearance symbol (*2)
  - Normal (No symbol)
  - Light preload (C1)
  - Medium preload (C0)
- M: Stainless steel LM block
- +1300L: LM rail length (in mm)
- P: Accuracy symbol (*3)
  - Normal grade (No Symbol)
  - High accuracy grade (H)
  - Precision grade (P)
  - Super precision grade (SP)
  - Ultra precision grade (UP)
- T: Symbol for LM rail jointed use
- M: Stainless steel LM rail
- -Ⅱ: Symbol for No. of rails used on the same plane (*4)

(*1) See contamination protection accessory on A1-494. (*2) See A1-71. (*3) See A1-76. (*4) See A1-13.

Note) This model number indicates that a single-rail unit constitutes one set. (i.e., required number of sets when 2 rails are used in parallel is 2 at a minimum.)
Those models equipped with QZ Lubricator cannot have a grease nipple. When desiring a grease nipple for a model attached with QZ, contact THK.

Download data by searching for the corresponding model number on the Technical Support site. https://tech.thk.com

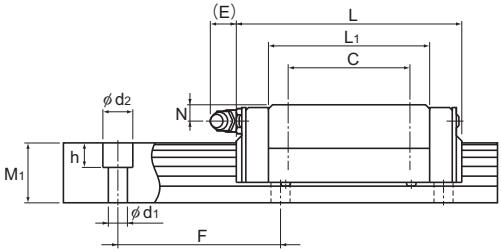

Unit: mm

	LM rail dimensions						Basic load rating		Static permissible moment kN-m*					Mass	
	Width		Height	Pitch		Length*	C	C_0	M_A		M_B		M_C	LM block	LM rail
	W_1 ±0.05	W_2	M_1	F	$d_1 \times d_2 \times h$	Max	kN	kN	1 block	Double blocks	1 block	Double blocks	1 block	kg	kg/m
	20	21.5	18	60	6×9.5×8.5	3000 (1480)	19.8	27.4	0.218	1.2	0.218	1.2	0.235	0.35	2.3
	20	21.5	18	60	6×9.5×8.5	3000 (1480)	23.9	35.8	0.363	1.87	0.363	1.87	0.307	0.47	2.3
	23	23.5	22	60	7×11×9	3000 (2020)	27.6	36.4	0.324	1.8	0.324	1.8	0.366	0.59	3.3
	23	23.5	22	60	7×11×9	3000 (2020)	35.2	51.6	0.627	3.04	0.627	3.04	0.518	0.75	3.3
	28	31	26	80	9×14×12	3000 (2520)	40.5	53.7	0.599	3.1	0.599	3.1	0.652	1.1	4.8
	28	31	26	80	9×14×12	3000 (2520)	48.9	70.2	0.995	4.89	0.995	4.89	0.852	1.3	4.8
	34	33	29	80	9×14×12	3000 (2520)	53.9	70.2	0.895	4.51	0.895	4.51	1.05	1.6	6.6
	34	33	29	80	9×14×12	3000 (2520)	65	91.7	1.49	7.13	1.49	7.13	1.37	2	6.6
	45	37.5	38	105	14×20×17	3090	82.2 100	101 135	1.5 2.59	8.37 13.4	1.5 2.59	8.37 13.4	1.94 2.6	2.8 3.3	11
	53	43.5	44	120	16×23×20	3060	121 148	146 194	2.6 4.46	14.1 22.7	2.6 4.46	14.1 22.7	3.43 4.56	4.5 5.7	15.1
	63	53.5	53	150	18×26×22	3000	195 249	228 323	5.08 9.81	25 45.6	5.08 9.81	25 45.6	6.2 8.79	8.5 10.7	22.5
	85	65	65	180	24×35×28	3000	304 367	355 464	10.2 16.9	51.2 81	10.2 16.9	51.2 81	12.8 16.7	17 23	35.2

Note) Symbol M indicates that stainless steel is used in the LM block, LM rail and balls. Those models marked with this symbol are therefore highly resistant to corrosion and environment.
The maximum length under "Length*" indicates the standard maximum length of an LM rail. (See A1-200.)
Static permissible moment*: 1 block: static permissible moment value with 1 LM block
Double blocks: static permissible moment value with 2 blocks closely contacting with each other

Options⇒A1-457

Models HSR-CB, HSR-CBM, HSR-HB and HSR-HBM

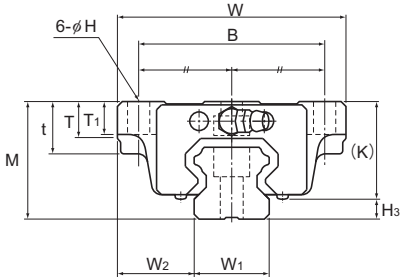

Model No.	Outer dimensions			LM block dimensions											
	Height M	Width W	Length L	B	C	H	L_1	t	T	T_1	K	N	E	Grease nipple	H_3
HSR 20CB HSR 20CBM	30	63	74	53	40	6	50.8	10	9.5	10	26	5	12	B-M6F	4
HSR 20HB HSR 20HBM	30	63	90	53	40	6	66.8	10	9.5	10	26	5	12	B-M6F	4
HSR 25CB HSR 25CBM	36	70	83.1	57	45	7	59.5	16	11	10	30.5	6	12	B-M6F	5.5
HSR 25HB HSR 25HBM	36	70	102.2	57	45	7	78.6	16	11	10	30.5	6	12	B-M6F	5.5
HSR 30CB HSR 30CBM	42	90	98	72	52	9	70.4	18	9	10	35	7	12	B-M6F	7
HSR 30HB HSR 30HBM	42	90	120.6	72	52	9	93	18	9	10	35	7	12	B-M6F	7
HSR 35CB HSR 35CBM	48	100	109.4	82	62	9	80.4	21	12	13	40.5	8	12	B-M6F	7.5
HSR 35HB HSR 35HBM	48	100	134.8	82	62	9	105.8	21	12	13	40.5	8	12	B-M6F	7.5
HSR 45CB HSR 45HB	60	120	139 170.8	100	80	11	98 129.8	25	13	15	50	10	16	B-PT1/8	10
HSR 55CB HSR 55HB	70	140	163 201.1	116	95	14	118 156.1	29	13.5	17	57	11	16	B-PT1/8	13
HSR 65CB HSR 65HB	90	170	186 245.5	142	110	16	147 206.5	37	21.5	23	76	19	16	B-PT1/8	14
HSR 85CB HSR 85HB	110	215	245.6 303	185	140	18	178.6 236	55	28	30	94	23	16	B-PT1/8	16

Model number coding

HSR35 CB 2 QZ ZZHH C0 M +1400L P T M -Ⅱ

- HSR35: Model number
- CB: Type of LM block
- 2: No. of LM blocks used on the same rail
- QZ: With QZ Lubricator
- ZZHH: Contamination protection accessory symbol (*1)
- C0: Radial clearance symbol (*2)
  - Normal (No symbol)
  - Light preload (C1)
  - Medium preload (C0)
- M: Stainless steel LM block
- +1400L: LM rail length (in mm)
- P: Accuracy symbol (*3)
  - Normal grade (No Symbol)
  - High accuracy grade (H)
  - Precision grade (P)
  - Super precision grade (SP)
  - Ultra precision grade (UP)
- T: Symbol for LM rail jointed use
- M: Stainless steel LM rail
- -Ⅱ: Symbol for No. of rails used on the same plane (*4)

(*1) See contamination protection accessory on A1-494. (*2) See A1-71. (*3) See A1-76. (*4) See A1-13.

Note) This model number indicates that a single-rail unit constitutes one set. (i.e., required number of sets when 2 rails are used in parallel is 2 at a minimum.)
Those models equipped with QZ Lubricator cannot have a grease nipple. When desiring a grease nipple for a model attached with QZ, contact THK.

Download data by searching for the corresponding model number on the Technical Support site. https://tech.thk.com

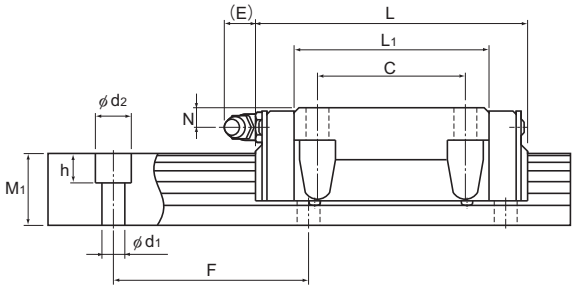

Unit: mm

	LM rail dimensions						Basic load rating		Static permissible moment kN-m*					Mass	
	Width		Height	Pitch		Length*	C	C_0	M_A		M_B		M_C	LM block	LM rail
	W_1 ±0.05	W_2	M_1	F	$d_1 \times d_2 \times h$	Max	kN	kN	1 block	Double blocks	1 block	Double blocks	1 block	kg	kg/m
	20	21.5	18	60	6×9.5×8.5	3000 (1480)	19.8	27.4	0.218	1.2	0.218	1.2	0.235	0.35	2.3
	20	21.5	18	60	6×9.5×8.5	3000 (1480)	23.9	35.8	0.363	1.87	0.363	1.87	0.307	0.47	2.3
	23	23.5	22	60	7×11×9	3000 (2020)	27.6	36.4	0.324	1.8	0.324	1.8	0.366	0.59	3.3
	23	23.5	22	60	7×11×9	3000 (2020)	35.2	51.6	0.627	3.04	0.627	3.04	0.518	0.75	3.3
	28	31	26	80	9×14×12	3000 (2520)	40.5	53.7	0.599	3.1	0.599	3.1	0.652	1.1	4.8
	28	31	26	80	9×14×12	3000 (2520)	48.9	70.2	0.995	4.89	0.995	4.89	0.852	1.3	4.8
	34	33	29	80	9×14×12	3000 (2520)	53.9	70.2	0.895	4.51	0.895	4.51	1.05	1.6	6.6
	34	33	29	80	9×14×12	3000 (2520)	65	91.7	1.49	7.13	1.49	7.13	1.37	2	6.6
	45	37.5	38	105	14×20×17	3090	82.2 100	101 135	1.5 2.59	8.37 13.4	1.5 2.59	8.37 13.4	1.94 2.6	2.8 3.3	11
	53	43.5	44	120	16×23×20	3060	121 148	146 194	2.6 4.46	14.1 22.7	2.6 4.46	14.1 22.7	3.43 4.56	4.5 5.7	15.1
	63	53.5	53	150	18×26×22	3000	195 249	228 323	5.08 9.81	25 45.6	5.08 9.81	25 45.6	6.2 8.79	8.5 10.7	22.5
	85	65	65	180	24×35×28	3000	304 367	355 464	10.2 16.9	51.2 81	10.2 16.9	51.2 81	12.8 16.7	17 23	35.2

Note) Symbol M indicates that stainless steel is used in the LM block, LM rail and balls. Those models marked with this symbol are therefore highly resistant to corrosion and environment.
The maximum length under "Length*" indicates the standard maximum length of an LM rail. (See A1-200.)
Static permissible moment*: 1 block: static permissible moment value with 1 LM block
Double blocks: static permissible moment value with 2 blocks closely contacting with each other

Options⇒A1-457

Models HSR-HA, HSR-HB and HSR-HR

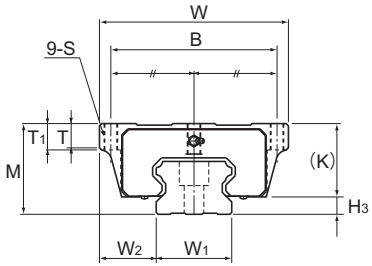

Models HSR100 to 150HA

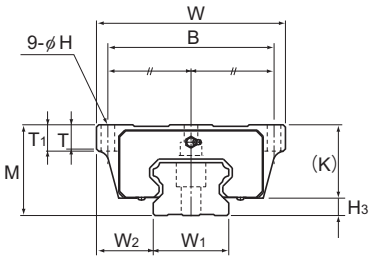

Models HSR100 to 150HB

Model No.	Outer dimensions			LM block dimensions											
	Height M	Width W	Length L	B	C	H	S×ℓ	L_1	T	T_1	K	N	E	Grease nipple	H_3
HSR 100HA HSR 100HB HSR 100HR	120	250 250 200	334	220 220 130	200	— 20 —	M18* — M18×27	261	32 32 33	35 35 —	100	23	16	B-PT1/4	20
HSR 120HA HSR 120HB HSR 120HR	130	290 290 220	365	250 250 146	210	— 22 —	M20* — M20×30	287	34 34 33.7	38 38 —	110	26.5	16	B-PT1/4	20
HSR 150HA HSR 150HB HSR 150HR	145	350 350 266	396	300 300 180	230	— 26 —	M24* — M24×35	314	36 36 33	40 40 —	123	29	16	B-PT1/4	22

Note) "*" indicates a through hole.

Model number coding

HSR150 HR 2 UU C1 +2350L H T -Ⅱ

- HSR150: Model number
- HR: Type of LM block
- 2: No. of LM blocks used on the same rail
- UU: Contamination protection accessory symbol (*1)
- C1: Radial clearance symbol (*2)
  - Normal (No symbol)
  - Light preload (C1)
  - Medium preload (C0)
- +2350L: LM rail length (in mm)
- H: Accuracy symbol (*3)
  - Normal grade (No Symbol)/High accuracy grade (H)
  - Precision grade (P)/Super precision grade (SP)
  - Ultra precision grade (UP)
- T: Symbol for LM rail jointed use
- -Ⅱ: Symbol for No. of rails used on the same plane (*4)

(*1) See contamination protection accessory on A1-494. (*2) See A1-71. (*3) See A1-76. (*4) See A1-13.

Note) This model number indicates that a single-rail unit constitutes one set. (i.e., required number of sets when 2 rails are used in parallel is 2 at a minimum.)

Download data by searching for the corresponding model number on the Technical Support site. https://tech.thk.com

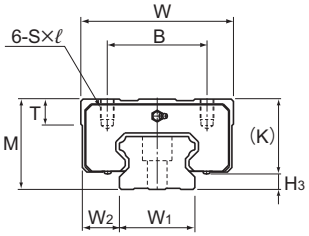

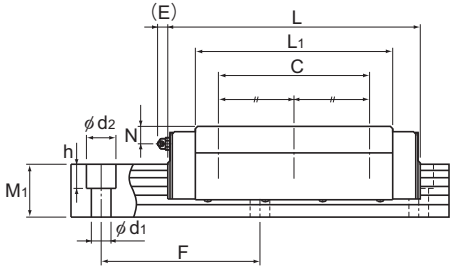

Models HSR100 to 150HR

Unit: mm

	LM rail dimensions						Basic load rating		Static permissible moment kN-m*					Mass	
	Width		Height	Pitch		Length*	C	C_0	M_A		M_B		M_C	LM block	LM rail
	W_1 ±0.05	W_2	M_1	F	$d_1 \times d_2 \times h$	Max	kN	kN	1 block	Double blocks	1 block	Double blocks	1 block	kg	kg/m
	100	75 75 50	70	210	26×39×32	3000	441	540	20.7	105	20.7	105	24.1	32	49
	114	88 88 53	75	230	33×48×43	3000	540	653	27.5	138	27.5	138	33.3	43	61
	144	103 103 61	85	250	39×58×46	3000	518	728	33.6	167	33.6	167	45.2	62	87

Note) The maximum length under "Length*" indicates the standard maximum length of an LM rail. (See A1-200.)
Static permissible moment*: 1 block: static permissible moment value with 1 LM block
Double blocks: static permissible moment value with 2 blocks closely contacting with each other

Options⇒A1-457

Standard Length and Maximum Length of the LM Rail

Table1 shows the standard lengths and the maximum lengths of model HSR variations. If the maximum length of the desired LM rail exceeds them, jointed rails will be used. Contact THK for details. For the G dimension when a special length is required, we recommend selecting the corresponding G value from the table. The longer the G dimension is, the less stable the G area may become after installation, thus causing an adverse impact to accuracy.

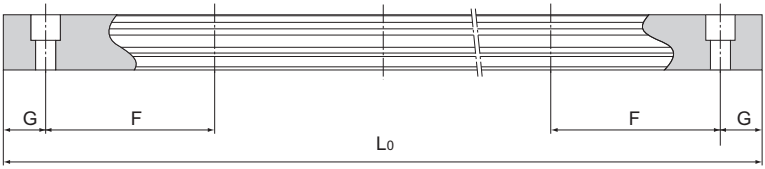

Table1 Standard Length and Maximum Length of the LM Rail for Model HSR

Unit: mm

Model No.	HSR 8	HSR 10	HSR 12	HSR 15	HSR 20	HSR 25	HSR 30	HSR 35	HSR 45	HSR 55	HSR 65	HSR 85	HSR 100	HSR 120	HSR 150
LM rail standard length (L_0)	35	45	70	160	160	220	280	280	570	780	1270	1530	1340	1470	1600
	55	70	110	220	220	280	360	360	675	900	1570	1890	1760	1930	2100
	75	95	150	280	280	340	440	440	780	1020	2020	2250	2180	2390	2350
	95	120	190	340	340	400	520	520	885	1140	2620	2610	2600		
	115	145	230	400	400	460	600	600	990	1260					
	135	170	270	460	460	520	680	680	1095	1380					
	155	195	310	520	520	580	760	760	1200	1500					
	175	220	350	580	580	640	840	840	1305	1620					
	195	245	390	640	640	700	920	920	1410	1740					
	215	270	430	700	700	760	1000	1000	1515	1860					
	235	295	470	760	760	820	1080	1080	1620	1980					
	255	320	510	820	820	940	1160	1160	1725	2100					
	275	345	550	940	940	1000	1240	1240	1830	2220					
		370	590	1000	1000	1060	1320	1320	1935	2340					
		395	630	1060	1060	1120	1400	1400	2040	2460					
		420	670	1120	1120	1180	1480	1480	2145	2580					
		445		1180	1180	1240	1560	1560	2250	2700					
		470		1240	1240	1300	1640	1640	2355	2820					
				1360	1360	1360	1720	1720	2460	2940					
				1480	1480	1420	1800	1800	2565	3060					
				1600	1600	1480	1880	1880	2670						
					1720	1540	1960	1960	2775						
					1840	1600	2040	2040	2880						
					1960	1720	2200	2200	2985						
					2080	1840	2360	2360	3090						
					2200	1960	2520	2520							
						2080	2680	2680							
						2200	2840	2840							
						2320	3000	3000							
						2440									
Standard pitch F	20	25	40	60	60	60	80	80	105	120	150	180	210	230	250
G	7.5	10	15	20	20	20	20	20	22.5	30	35	45	40	45	50
Max length	(975)	(995)	(1240)	3000 (1240)	3000 (1480)	3000 (2020)	3000 (2520)	3000 (2520)	3090	3060	3000	3000	3000	3000	3000

Note1) The maximum length varies with accuracy grades. Contact THK for details.
Note2) If jointed rails are not allowed and a greater length than the maximum values above is required, contact THK.
Note3) The figures in the parentheses indicate the maximum lengths of stainless steel made models.

Tapped-hole LM Rail Type of Model HSR

HSR model rails also include a type where the LM rail is tapped from the bottom. This type is useful when mounting from the bottom of the base and when increased contamination protection is desired.

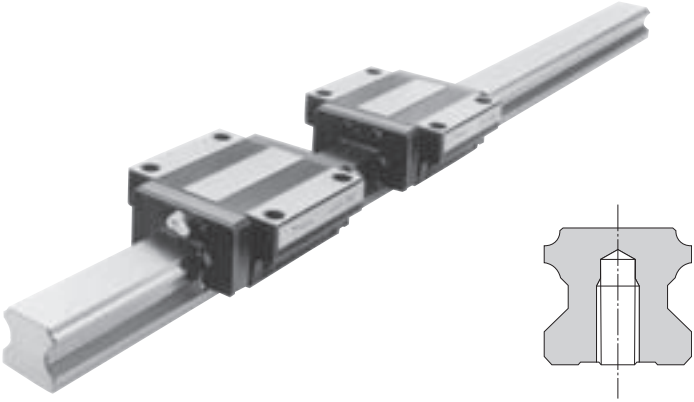

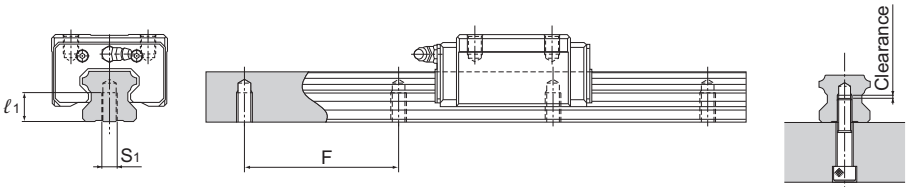

(1) Determine the bolt length so that a clearance of 2 to 5 mm is secured between the bolt end and the bottom of the tap (effective tap depth). (See figure above.)
(2) A tapped-hole LM rail type is available also for model HSR-YR.
(3) For standard pitches of the taps, see Table1 on A1-200.

Table2 Dimensions of the LM Rail Tap

Unit: mm

Model No.	S_1	Effective tap depth ℓ_1
HSR 15	M5	8
HSR 20	M6	10
HSR 25	M6	12
HSR 30	M8	15
HSR 35	M8	17
HSR 45	M12	24
HSR 55	M14	24
HSR 65	M20	30

Model number coding

HSR30A2UU +1000LH K

Symbol for tapped-hole LM rail type

Prevention of LM block from falling off of LM rail

In miniature model HSR, the balls fall out if the LM block comes off the LM rail.
For this reason, LM Guide assemblies are delivered with a part which prevents the LM block from coming off the rail. If you remove this part when using the product, please take precautions to avoid overrunning the blocks off of the rail.

Greasing Hole

[Semi-standard Greasing Hole for Model HSR]
For model HSR, a semi-standard greasing hole is available. Specify the appropriate model number according to the application.

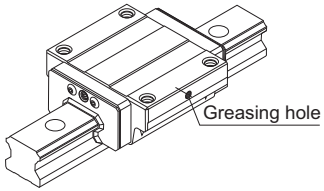

Type with a Greasing Hole Drilled on the Side Surface

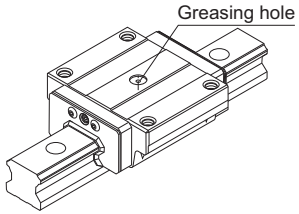

Type with a Greasing Hole Drilled on the Top Face

SR

LM Guide Radial Type Model SR

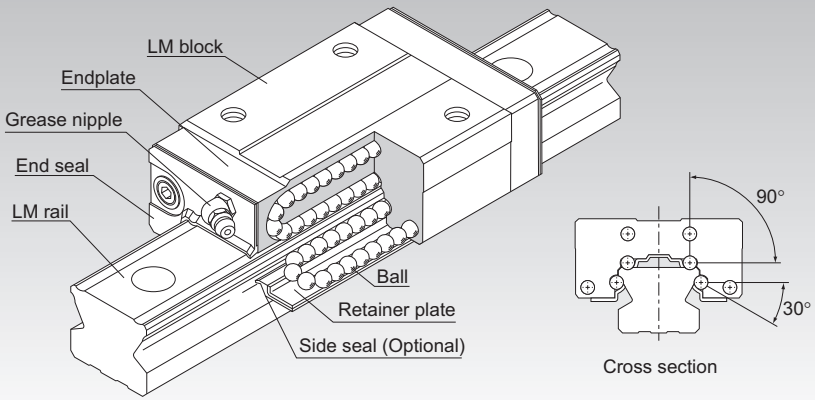

Point of Selection A1-10
Point of Design A1-434
Options A1-457
Model No. A1-522
Precautions on Use A1-528
Accessories for Lubrication A24-1
Mounting Procedure and Maintenance B1-89

Equivalent moment factor A1-43
Rated Loads in All Directions A1-58
Equivalent factor in each direction A1-60
Radial Clearance A1-71
Accuracy Standards A1-76
Shoulder Height of the Mounting Base and the Corner Radius A1-443
Permissible Error of the Mounting Surface A1-450
Dimensions of Each Model with an Option Attached A1-470

Structure and Features

Balls roll in four rows of raceways precision-ground on an LM rail and an LM block, and endplates incorporated in the LM block allow the balls to circulate. Since a retainer plate holds the balls, they will not fall off even if the LM block is removed from the LM rail. With the low sectional height and the high rigidity design of the LM block, this model achieves highly accurate and stable straight motion.

[Compact, Heavy Load]
Since it is a compact designed model that has a low sectional height and a ball contact structure rigid in the radial direction, this model is optimal for horizontal guide units.

[Mounting accuracy can easily be achieved]
Since this model is a self-adjusting type capable of easily absorbing an accuracy error in parallelism and level between two rails, highly accurate and smooth motion can be achieved.

[Low Noise]
The endplate installed at each end of the LM block is designed to ensure the smooth and low-noise circulation of the balls at the turning areas.

[High Durability]
Even under a preload or excessive biased load, differential slip of balls is minimal. As a result, high wear resistance and long-term maintenance of accuracy are achieved.

[Stainless Steel Type also Available]
A special type which LM block, LM rail and balls are made of stainless steel is also available.

Types and Features

Model SR-W

Specification Table⇒A1-210

With this type, the LM block has a smaller width (W) and tapped holes.

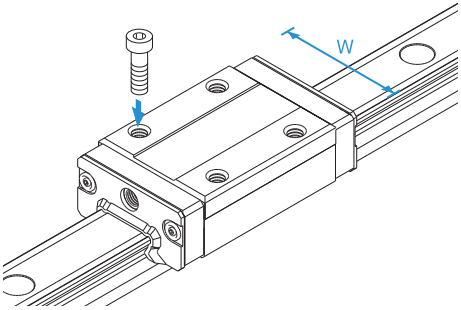

Model SR-TB

Specification Table⇒A1-212

The LM block has the same height as model SR-W and can be mounted from the bottom.

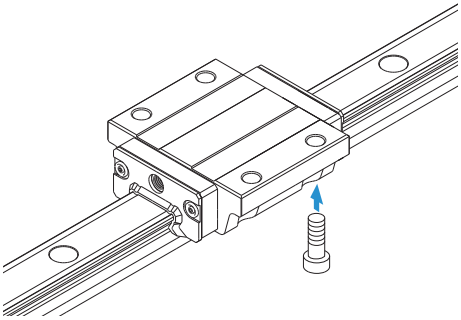

Model SR-V

Specification Table⇒A1-210

A space-saving type whose LM block has the same cross-sectional shape as model SR-W, but has a smaller overall LM block length (L).

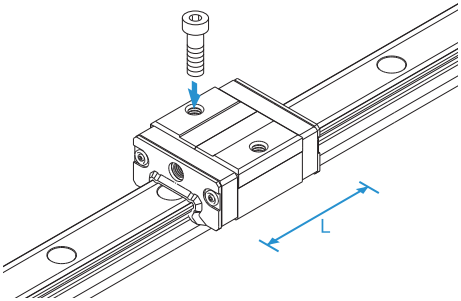

Model SR-SB

Specification Table⇒A1-212

A space-saving type whose LM block has the same cross-sectional shape as model SR-TB, but has a smaller overall LM block length (L).

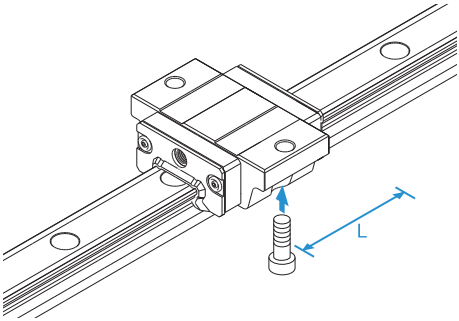

Characteristics of Model SR

When compared to models having a contact angle of 45°, model SR shows excellent characteristics as indicated below. Using these characteristics, you can design and manufacture highly accurate and highly rigid machines or equipment.

Difference in Rated Load and Service Life

Since SR has a contact angle of 90°, its rated load and service life are different from those with a contact angle of 45°. When comparing model SR with a model that has a contact angle of 45° and when the same radial load is applied to the two models with the same ball diameter as shown in the figure below, the load applied to SR is 70% of the other model. As a result, the service life of SR is more than twice that of the other model.

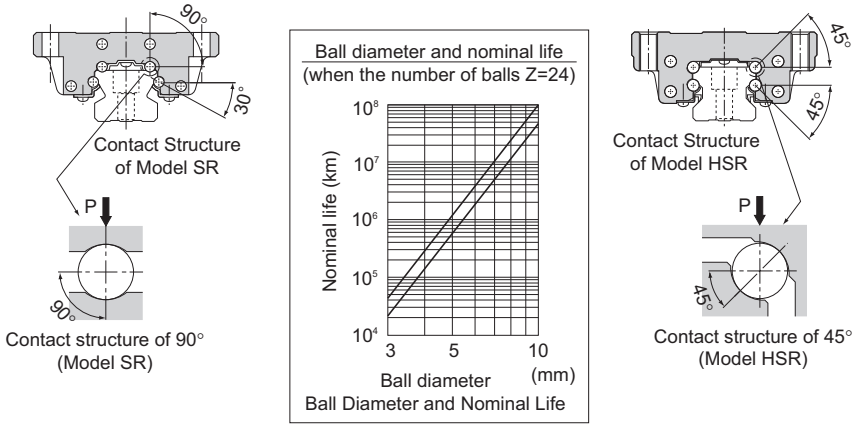

Fig.1

Difference in Accuracy

If a machining error (grinding error) occurs in the LM rail or LM block, it will affect the running accuracy. Assuming that there is a machining error of Δ on the raceway, it results in an error in the radial direction, and the error with the contact angle of 45° (model HSR) is 1.4 times greater than that of the contact angle of 90° (model SR). As for the machining error resulting in horizontal direction error, the error with the contact angle of 45° is 1.22 times greater than the contact angle of 30° .

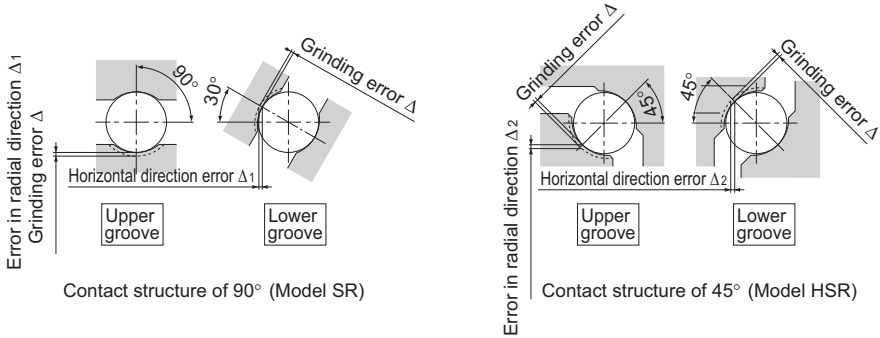

Fig.2 Machining Error and Accuracy

Difference in Rigidity

The 90° contact angle adopted by model SR has a difference with the 45° contact angle also in rigidity.
When the same radial load "P" is applied, the displacement in the radial direction with model SR is only 56% of that with the contact angle of 45°. Accordingly, where high rigidity in the radial direction is required, model SR is more advantageous. The figure below shows the difference in radial load and displacement.

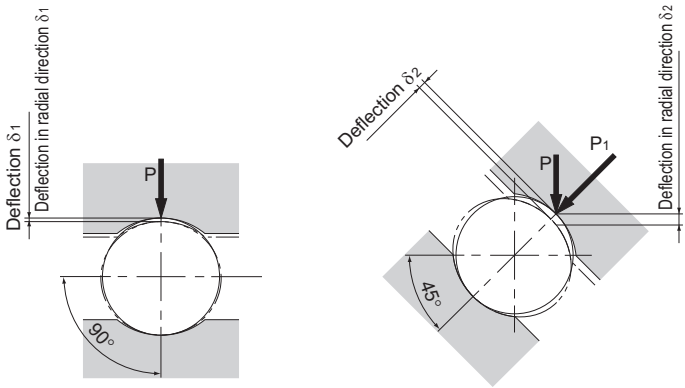

Fig.3 Deflection under a Radial Load

Load and deflection when contact angles are not the same (Da=6.35mm)
(deflection per ball)

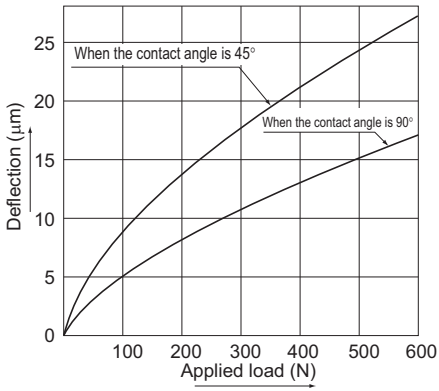

Fig.4 Radial Load and Deflection

Conclusion

Model SR with this type of 90° contact construction are ideal for locations where the load applied is mostly radial, locations where radial rigidity is required, and locations where accurate motion is demanded in the up, down, left and right directions.
However, if the reverse radial load, the lateral load or the moment is large, we recommend model HSR, which has a contact angle of 45° (4-way equal load).

Models SR-W, SR-WM, SR-V and SR-VM

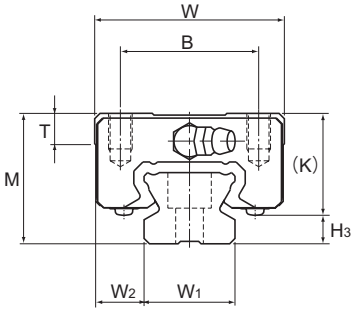

Model No.	Outer dimensions			LM block dimensions									
	Height M	Width W	Length L	B	C	S×ℓ	L_1	T	K	N	E	Grease nipple	H_3
SR 15V/VM SR 15W/WM	24	34	40.4 57	26	— 26	M4×7	22.9 39.5	5.7	18.2	6	5.5	PB1021B	5.8
SR 20V/VM SR 20W/WM	28	42	47.3 66.2	32	— 32	M5×8	27.8 46.7	7.2	22	6	12	B-M6F	6
SR 25V/VM SR 25W/WM	33	48	59.2 83	35	— 35	M6×9	35.2 59	7.7	26	7	12	B-M6F	7
SR 30V/VM SR 30W/WM	42	60	67.9 96.8	40	— 40	M8×12	40.4 69.3	8.5	32.5	8	12	B-M6F	9.5
SR 35V/VM SR 35W/WM	48	70	77.6 111	50	— 50	M8×12	45.7 79	12.5	36.5	8.5	12	B-M6F	11.5
SR 45W	60	86	126	60	60	M10×15	90.5	15	47.5	11.5	16	B-PT1/8	12.5
SR 55W	68	100	156	75	75	M12×20	117	16.7	54.5	12	16	B-PT1/8	13.5
SR 70T	85	126	194.6	90	90	M16×25	147.6	24.5	70	12	16	B-PT1/8	15
SR 85T	110	156	180	100	80	M18×30	130	25.5	91.5	27	12	A-PT1/8	18.5
SR 100T	120	178	200	120	100	M20×35	150	29.5	101	32	12	A-PT1/8	19
SR 120T	110	205	235	160	120	M20×35	180	24	95	14	13.5	B-PT1/4	15
SR 150T	135	250	280	200	160	M20×35	215	24	113	17	13.5	B-PT1/4	22

Model number coding

SR25 W 2 UU C0 M +1240L Y P T M -Ⅱ

- SR25: Model number
- W: Type of LM block
- 2: No. of LM blocks used on the same rail
- UU: Contamination protection accessory symbol (*1)
- C0: Radial clearance symbol (*2)
  - Normal (No symbol)
  - Light preload (C1)
  - Medium preload (C0)
- M: Stainless steel LM block
- +1240L: LM rail length (in mm)
- Y: Applied to only 15 and 25
- P: Accuracy symbol (*3)
  - Normal grade (No Symbol)/High accuracy grade (H)
  - Precision grade (P)/Super precision grade (SP)
  - Ultra precision grade (UP)
- T: Symbol for LM rail jointed use
- M: Stainless steel LM rail
- -Ⅱ: Symbol for No. of rails used on the same plane (*4)

(*1) See contamination protection accessory on A1-494. (*2) See A1-71. (*3) See A1-76. (*4) See A1-13.

Note) This model number indicates that a single-rail unit constitutes one set. (i.e., required number of sets when 2 rails are used in parallel is 2 at a minimum.)

Download data by searching for the corresponding model number on the Technical Support site. https://tech.thk.com

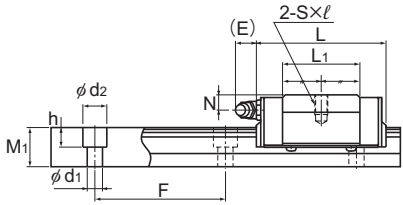

Model SR-V

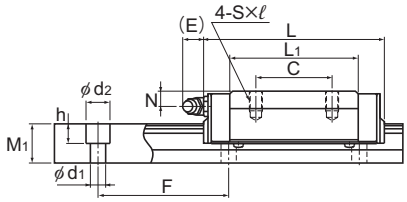

Model SR-W

Unit: mm

	LM rail dimensions						Basic load rating		Static permissible moment kN-m*					Mass	
	Width		Height	Pitch		Length*	C	C_0	M_A		M_B		M_C	LM block	LM rail
	W_1 ±0.05	W_2	M_1	F	$d_1 \times d_2 \times h$	Max	kN	kN	1 block	Double blocks	1 block	Double blocks	1 block	kg	kg/m
	15	9.5	12.5	60	3.5×6×4.5	(1240) 3000	9.1 13.8	11.7 20.5	0.0344 0.0984	0.234 0.551	0.0215 0.0604	0.149 0.343	0.0694 0.122	0.12 0.2	1.2
	20	11	15.5	60	6×9.5×8.5	(1480) 3000	13.4 19.2	17.2 28.6	0.064 0.167	0.396 0.887	0.0397 0.102	0.25 0.55	0.135 0.224	0.2 0.3	2.1
	23	12.5	18	60	7×11×9	(2020) 3000	21.6 30.9	26.8 44.7	0.125 0.326	0.773 1.74	0.0774 0.2	0.488 1.08	0.245 0.408	0.3 0.4	2.7
	28	16	23	80	7×11×9	(2520) 3000	29.5 45.6	34.4 64.4	0.173 0.564	1.15 2.92	0.108 0.346	0.735 1.8	0.376 0.703	0.5 0.8	4.3
	34	18	27.5	80	9×14×12	(2520) 3000	40.9 60.4	46.7 81.8	0.275 0.785	1.79 4.27	0.171 0.482	1.14 2.65	0.615 1.08	0.8 1.2	6.4
	45	20.5	35.5	105	11×17.5×14	3000	80.4	107	1.17	6.34	0.721	3.94	1.89	2.2	11.3
	48	26	38	120	14×20×17	3000	136	179	2.61	13	1.6	8.05	3.33	3.6	12.8
	70	28	47	150	18×26×22	3000	226	282	5.03	25.7	3.09	15.9	7.47	7	22.8
	85	35.5	65.5	180	18×26×22	3000	120	224	2.54	15.1	1.25	7.47	5.74	10.1	34.9
	100	39	70.3	210	22×32×25	3000	148	283	3.95	20.9	1.95	10.3	8.55	14.1	46.4
	114	45.5	65	230	26×39×30	3000	279	377	5.83	32.9	2.87	16.2	13.7	—	—
	144	53	77	250	33×48×36	3000	411	537	9.98	55.8	4.92	27.5	24.3	—	—

Note1) Symbol M indicates that stainless steel is used in the LM block, LM rail and balls. Those models marked with this symbol are therefore highly resistant to corrosion and environment.
Those model numbers including and greater than SR85T are semi-standard models. If desiring these models, contact THK.
Models SR85T and SR100T are equipped with grease nipple on the side face of the LM block.
The maximum length under "Length*" indicates the standard maximum length of an LM rail. (See A1-214.)
Static permissible moment*: 1 block: static permissible moment value with 1 LM block
Double blocks: static permissible moment value with 2 blocks closely contacting with each other

Note2) For models SR15 and 25, two types of rails with different mounting hole dimensions are offered (see Table1).
When, replacing this model with model SSR, pay attention to the mounting hole dimension of the LM rail.
Contact THK for details.

Table1 The dimension of the rail mounting hole

Model No.	Standard rail	Semi-Standard rail
SR 15	For M3 (No symbol)	For M4 (Symbol Y)
SR 25	For M6 (Symbol Y)	For M5 (No symbol)

Options⇒A1-457

Models SR-TB, SR-TBM, SR-SB and SR-SBM

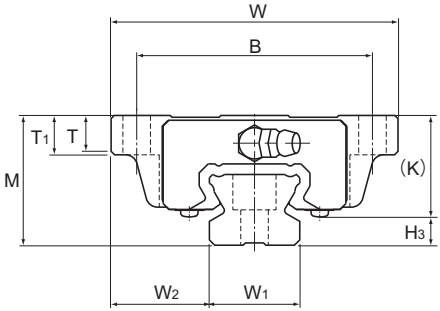

Model No.	Outer dimensions			LM block dimensions										
	Height M	Width W	Length L	B	C	H	L_1	T	T_1	K	N	E	Grease nipple	H_3
SR 15SB/SBM SR 15TB/TBM	24	52	40.4 57	41	— 26	4.5	22.9 39.5	6.1	7	18.2	6	5.5	PB1021B	5.8
SR 20SB/SBM SR 20TB/TBM	28	59	47.3 66.2	49	— 32	5.5	27.8 46.7	8	9	22	6	12	B-M6F	6
SR 25SB/SBM SR 25TB/TBM	33	73	59.2 83	60	— 35	7	35.2 59	9.1	10	26	7	12	B-M6F	7
SR 30SB/SBM SR 30TB/TBM	42	90	67.9 96.8	72	— 40	9	40.4 69.3	8.7	10	32.5	8	12	B-M6F	9.5
SR 35SB/SBM SR 35TB/TBM	48	100	77.6 111	82	— 50	9	45.7 79	11.2	13	36.5	8.5	12	B-M6F	11.5
SR 45TB	60	120	126	100	60	11	90.5	12.8	15	47.5	11.5	16	B-PT1/8	12.5
SR 55TB	68	140	156	116	75	14	117	15.3	17	54.5	12	16	B-PT1/8	13.5

Note) Symbol M indicates that stainless steel is used in the LM block, LM rail and balls. Those models marked with this symbol are therefore highly resistant to corrosion and environment.

Model number coding

SR25 TB 2 UU C1 +1200L Y H T -Ⅱ

- SR25: Model number
- TB: Type of LM block
- 2: No. of LM blocks used on the same rail
- UU: Contamination protection accessory symbol (*1)
- C1: Radial clearance symbol (*2)
  - Normal (No symbol)
  - Light preload (C1)
  - Medium preload (C0)
- +1200L: LM rail length (in mm)
- Y: Applied to only 15 and 25
- H: Accuracy symbol (*3)
  - Normal grade (No Symbol)/High accuracy grade (H)
  - Precision grade (P)/Super precision grade (SP)
  - Ultra precision grade (UP)
- T: Symbol for LM rail jointed use
- -Ⅱ: Symbol for No. of rails used on the same plane (*4)

(*1) See contamination protection accessory on A1-494. (*2) See A1-71. (*3) See A1-76. (*4) See A1-13.

Note) This model number indicates that a single-rail unit constitutes one set. (i.e., required number of sets when 2 rails are used in parallel is 2 at a minimum.)

Download data by searching for the corresponding model number on the Technical Support site. https://tech.thk.com

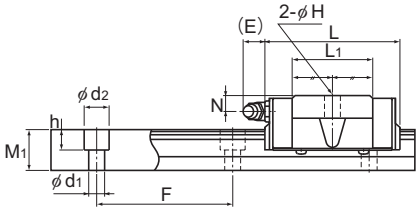

Model SR-SB

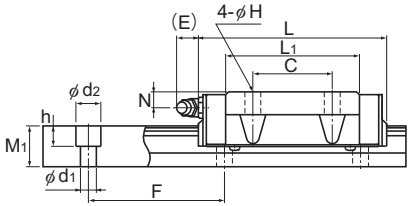

Model SR-TB

Unit: mm

	LM rail dimensions						Basic load rating		Static permissible moment kN-m*					Mass	
	Width		Height	Pitch		Length*	C	C_0	M_A		M_B		M_C	LM block	LM rail
	W_1 ±0.05	W_2	M_1	F	$d_1 \times d_2 \times h$	Max	kN	kN	1 block	Double blocks	1 block	Double blocks	1 block	kg	kg/m
	15	18.5	12.5	60	3.5×6×4.5	(1240) 3000	9.1 13.8	11.7 20.5	0.0344 0.0984	0.234 0.551	0.0215 0.0604	0.149 0.343	0.0694 0.122	0.15 0.2	1.2
	20	19.5	15.5	60	6×9.5×8.5	(1480) 3000	13.4 19.2	17.2 28.6	0.064 0.167	0.396 0.887	0.0397 0.102	0.25 0.55	0.135 0.224	0.3 0.4	2.1
	23	25	18	60	7×11×9	(2020) 3000	21.6 30.9	26.8 44.7	0.125 0.326	0.773 1.74	0.0774 0.2	0.488 1.08	0.245 0.408	0.4 0.6	2.7
	28	31	23	80	7×11×9	(2520) 3000	29.5 45.6	34.4 64.4	0.173 0.564	1.15 2.92	0.108 0.346	0.735 1.8	0.376 0.703	0.8 1.1	4.3
	34	33	27.5	80	9×14×12	(2520) 3000	40.9 60.4	46.7 81.8	0.275 0.785	1.79 4.27	0.171 0.482	1.14 2.65	0.615 1.08	1 1.5	6.4
	45	37.5	35.5	105	11×17.5×14	3000	80.4	107	1.17	6.34	0.721	3.94	1.89	2.5	11.3
	48	46	38	120	14×20×17	3000	136	179	2.61	13	1.6	8.05	3.33	4.2	12.8

Note1) The maximum length under "Length*" indicates the standard maximum length of an LM rail. (See A1-214.)
Static permissible moment*: 1 block: static permissible moment value with 1 LM block
Double blocks: static permissible moment value with 2 blocks closely contacting with each other

Note2) For models SR15 and 25, two types of rails with different mounting hole dimensions are offered (see Table1).
When, replacing this model with model SSR, pay attention to the mounting hole dimension of the LM rail.
Contact THK for details.

Table1 The dimension of the rail mounting hole

Model No.	Standard rail	Semi-Standard rail
SR 15	For M3 (No symbol)	For M4 (Symbol Y)
SR 25	For M6 (Symbol Y)	For M5 (No symbol)

Options⇒A1-457

Standard Length and Maximum Length of the LM Rail

Table1 shows the standard lengths and the maximum lengths of model SR variations. If the maximum length of the desired LM rail exceeds them, jointed rails will be used. Contact THK for details. For the G dimension when a special length is required, we recommend selecting the corresponding G value from the table. The longer the G dimension is, the less stable the G area may become after installation, thus causing an adverse impact to accuracy.

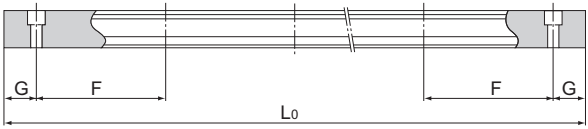

Table1 Standard Length and Maximum Length of the LM Rail for Model SR

Unit: mm

Model No.	SR 15	SR 20	SR 25	SR 30	SR 35	SR 45	SR 55	SR 70	SR 85	SR 100	SR 120	SR 150
LM rail standard length (L_o)	160	220	220	280	280	570	780	1270	1520	1550	1700	1600
	220	280	280	360	360	675	900	1570	2060	1970	2390	2100
	280	340	340	440	440	780	1020	2020	2600	2600		
	340	400	400	520	520	885	1140	2620				
	400	460	460	600	600	990	1260					
	460	520	520	680	680	1095	1380					
	520	580	580	760	760	1200	1500					
	580	640	640	840	840	1305	1740					
	640	700	700	920	920	1410	1860					
	700	760	760	1000	1000	1515	1980					
	760	820	820	1080	1080	1725	2100					
	820	940	940	1160	1160	1830	2220					
	940	1000	1000	1240	1240	1935	2340					
	1000	1060	1060	1320	1320	2040	2460					
	1060	1120	1120	1400	1400	2145	2580					
	1120	1180	1180	1480	1480	2250	2700					
	1180	1240	1240	1640	1640	2355	2820					
	1240	1300	1300	1720	1720	2460	2940					
	1300	1360	1360	1800	1800	2565						
	1360	1420	1420	1880	1880	2670						
	1420	1480	1480	1960	1960	2775						
	1480	1540	1540	2040	2040	2880						
	1540	1600	1600	2120	2120	2985						
		1660	1660	2200	2200							
		1720	1720	2280	2280							
		1780	1780	2360	2360							
		1840	1840	2440	2440							
		1900	1900	2520	2520							
		1960	1960	2600	2600							
		2020	2020	2680	2680							
		2080	2080	2760	2760							
		2140	2140	2840	2840							
			2200	2920	2920							
			2260									
			2320									
			2380									
			2440									
Standard pitch F	60	60	60	80	80	105	120	150	180	210	230	250
G	20	20	20	20	20	22.5	30	35	40	40	45	50
Max length	3000 (1240)	3000 (1480)	3000 (2020)	3000 (2520)	3000 (2520)	3000	3000	3000	3000	3000	3000	3000

Note1) The maximum length varies with accuracy grades. Contact THK for details.
Note2) If jointed rails are not allowed and a greater length than the maximum values above is required, contact THK.
Note3) Those model numbers including and greater than SR85T are semi-standard models. If desiring these models, contact THK.
Note4) The figures in the parentheses indicate the maximum lengths of stainless steel made models.

Tapped-hole LM Rail Type of Model SR

SR model rails also include a type where the LM rail is tapped from the bottom. This type is useful when mounting from the bottom of the base and when increased contamination protection is desired.

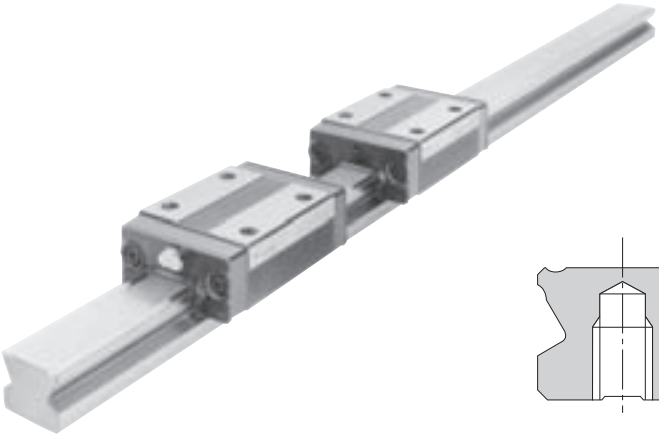

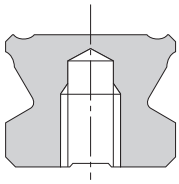

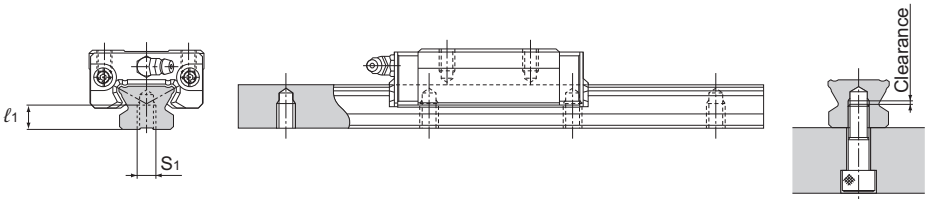

(1) A tapped-hole LM rail type is available only for high accuracy or lower grades.
(2) Determine the bolt length so that a clearance of 2 to 5 mm is secured between the bolt end and the bottom of the tap (effective tap depth). (See figure above.)
(3) For standard pitches of the taps, see Table1 on A1-214.

Table2 Dimensions of the LM Rail Tap Unit: mm

Model No.	S_1	Effective tap depth ℓ_1
SR 15	M5	7
SR 20	M6	9
SR 25	M6	10
SR 30	M8	14
SR 35	M8	16
SR 45	M12	20
SR 55	M14	22

Model number coding

SR30 W2UU +1000LH K

Symbol for tapped-hole LM rail type

NR/NRS-X

LM Guide Ultra-heavy Load Type for Machine Tools Model NR/NRS-X

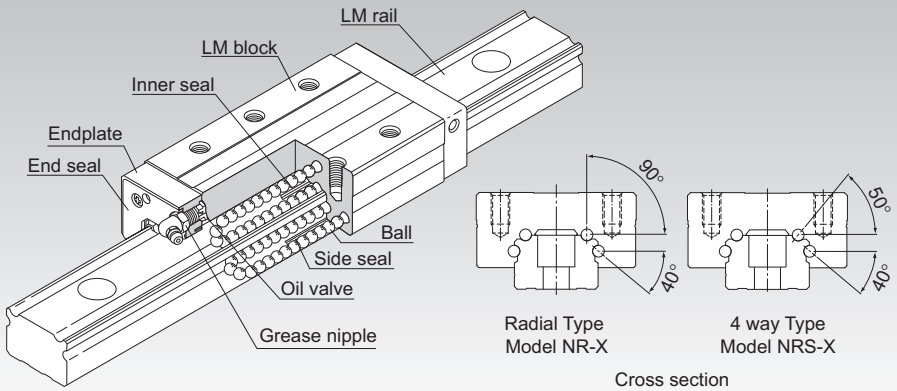

Point of Selection A1-10

Point of Design A1-434

Options A1-457

Model No. A1-522

Precautions on Use A1-528

Accessories for Lubrication A24-1

Mounting Procedure and Maintenance B1-89

Equivalent moment factor A1-43

Rated Loads in All Directions A1-58

Equivalent factor in each direction A1-60

Radial Clearance A1-70

Accuracy Standards A1-76

Shoulder Height of the Mounting Base and the Corner Radius A1-444

Permissible Error of the Mounting Surface A1-450

Dimensions of Each Model with an Option Attached A1-470

Structure and Features

Balls roll in four rows of raceways precision-ground on an LM rail and an LM block, and endplates incorporated in the LM block allow the balls to circulate. The raceways are cut into deep grooves that have a radius closer to that of the balls than in the conventional design, using special equipment and an extremely precise cutting technique. This design allows high rigidity, high vibration/impact resistance and high damping capacity, all of which are required for machine tools, thus making these models capable of bearing ultra-heavy loads.

* Due to the extremely high rigidity of the LM guides used in models NR/NRS-X, the construction does not easily absorb the effects of mounting surface misalignment and installation errors. Where such effects arise, there is a risk of reduced operating life and/or malfunction. Contact THK when considering the use of these products.

[Improved Damping Capacity]

While the machine tool (equipped with NR or NRS) is not cutting a workpiece during operation, the LM Guide travels normally and smoothly. While the machine tool is cutting the workpiece, the cutting force is applied to the LM Guide to increase and the contact area between the balls and the raceway, allowing an appropriate mixture of rolling and sliding motions to be achieved. Accordingly, the friction resistance is increased and the damping capacity is improved.
Since the absolute slip during the rolling and sliding motion is insignificant, it causes little wear and does not affect the service life.

[Highly Rational LM Guide]

The excessively large differential slip occurring in a Gothic-arch groove does not happen with these models. They smoothly travel and achieve high positioning accuracy during fast feeding. During the cutting operation, appropriate slip occurs according to the cutting load, the rolling resistance is increased and the damping capacity is increased. Thus, models NR and NRS are highly rational LM Guides.

[High Rigidity]

To increase the rigidity of the LM block and the LM rail, which may deteriorate the overall rigidity of the LM Guide in the reverse radial and lateral directions, THK made full use of FEM to achieve optimal design within the limited dimensional range.
THK offers two identically sized models with different characteristics, namely the Radial Type Model NR-X and 4 way Type Model NRS-X. Users can select the model that best suits their specifications.

[Ultra-heavy Load]

Since the curvature of the raceway is approximated to the ball diameter, the ball contact area under a load is increased and the LM Guide is capable of receiving an ultra-heavy load.

Types and Features

Models NR-RX/NRS-RX

Specification Table⇒A1-222/A1-224

With this type, the LM block has a smaller width (W) and tapped holes. Used in places where the space for table width is limited.

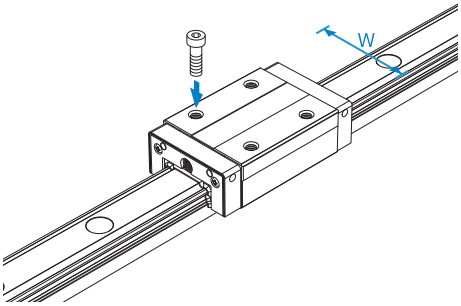

Models NR-LRX/NRS-LRX

Specification Table⇒A1-222/A1-224

The LM block has the same cross-sectional shape as models NR-RX/NRS-RX, but has a longer overall LM block length (L) and a greater rated load.

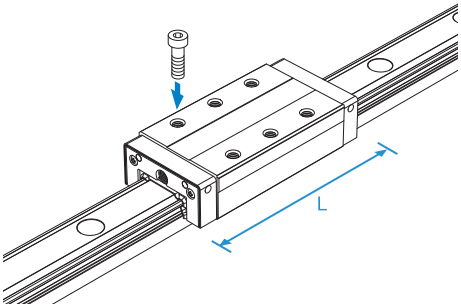

Models NR-CX/NRS-CX

Specification Table⇒A1-226/A1-228

The flange of the LM block has tapped holes. Can be mounted from the top or the bottom. Can also be used in places where the table cannot have through holes for mounting bolts.

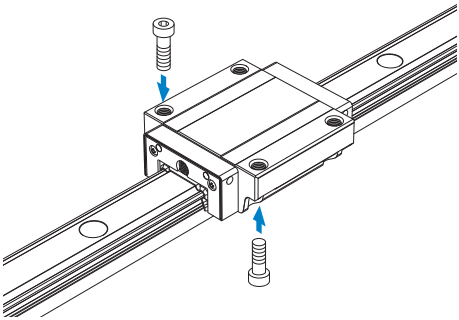

Models NR-LCX/NRS-LCX

Specification Table⇒A1-226/A1-228

The LM block has the same cross-sectional shape as models NR-CX/NRS-CX, but has a longer overall LM block length (L) and a greater rated load.

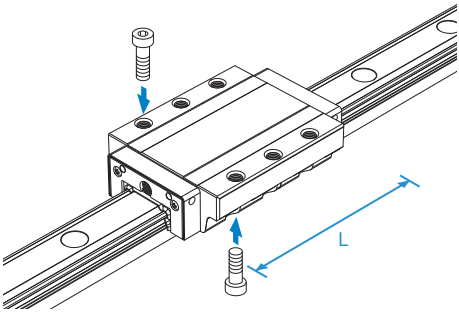

Models NR-R/NRS-R

Specification Table⇒A1-222/A1-224

With this type, the LM block has a smaller width (W) and tapped holes. Used in places where the space for table width is limited.

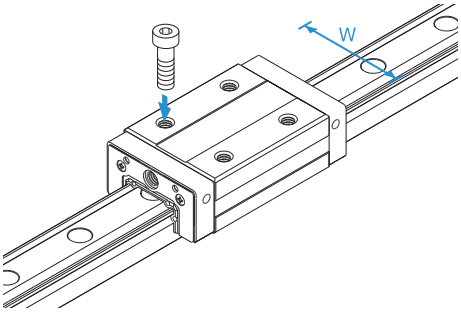

Models NR-LR/NRS-LR

Specification Table⇒A1-222/A1-224

The LM block has the same cross-sectional shape as models NR-R/NRS-R, but has a longer overall LM block length (L) and a greater rated load.

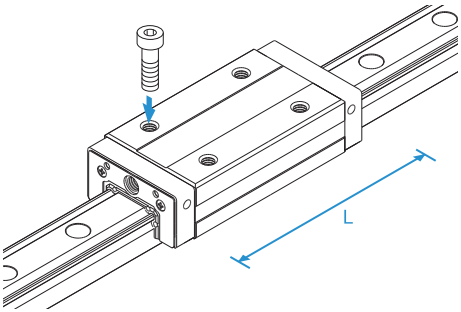

Models NR-A/NRS-A

Specification Table⇒A1-230

The flange of its LM block has tapped holes.

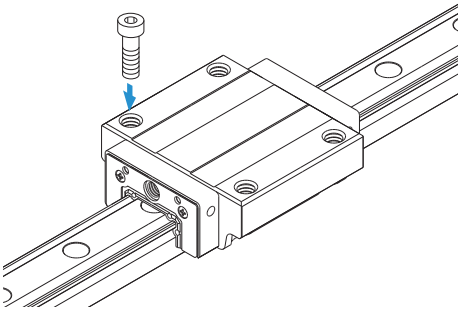

Models NR-LA/NRS-LA

Specification Table⇒A1-230

The LM block has the same cross-sectional shape as models NR-A/NRS-A, but has a longer overall LM block length (L) and a greater rated load.

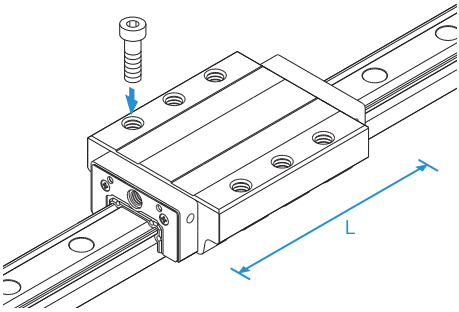

Models NR-B/NRS-B

Specification Table⇒A1-232

The flange of the LM block has through holes. Used in places where the table cannot have through holes for mounting bolts.

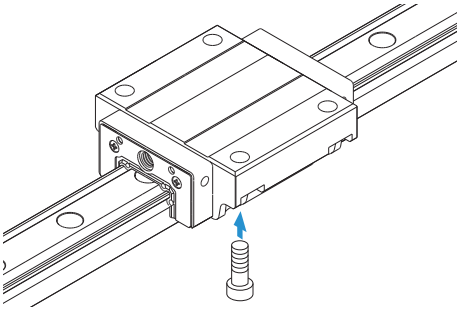

Models NR-LB/NRS-LB

Specification Table⇒A1-232

The LM block has the same cross-sectional shape as models NR-B/NRS-B, but has a longer overall LM block length (L) and a greater rated load.

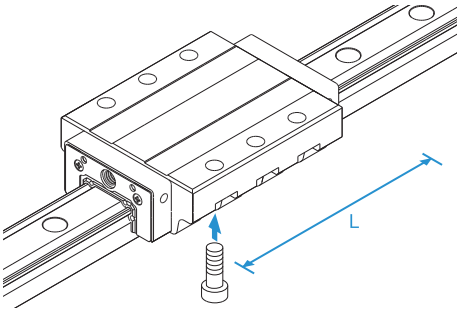

Models NR-RX, NR-LRX, NR-R and NR-LR

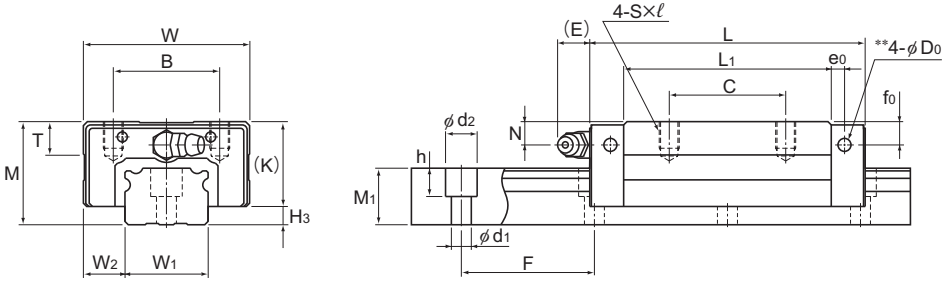

Model NR-RX

Model No.	Outer dimensions			LM block dimensions													
	Height M	Width W	Length L	B	C	S×ℓ	L_1	T	K	N	f_0	E	e_0	D_0	Grease nipple	H_3
NR 25RX NR 25LRX	31	50	82.8 102	32	35 50	M6×8	61.4 80.6	9.7	25.5	7.8	5.1	12	4.5	3.9	B-M6F	5.5
NR 30RX NR 30LRX	38	60	98 120.5	40	40 60	M8×10	72.1 94.6	9.7	31	10.3	7	12	6.5	3.9	B-M6F	7
NR 35RX NR 35LRX	44	70	109.5 135	50	50 72	M8×12	79 104.5	11.7	35	12.1	8	12	6	5.2	B-M6F	9
NR 45RX NR 45LRX	52	86	138.2 171	60	60 80	M10×17	105 137.8	14.7	40.4	13.9	8	16	8.5	5.2	B-PT1/8	11.6
NR 55RX NR 55LRX	63	100	163.3 200.5	65	75 95	M12×18	123.6 160.8	17.7	49	16.6	10	16	10	5.2	B-PT1/8	14
NR 65RX NR 65LRX	75	126	186 246	76	70 110	M16×20	143.6 203.6	21.6	60	19	15	16	8.7	8.2	B-PT1/8	15
NR 75R NR 75LR	83	145	218 274	95	80 130	M18×25	170.2 226.2	25.3	68	18	17	16	9	8.2	B-PT1/8	15
NR 85R NR 85LR	90	156	246.7 302.8	100	80 140	M18×25	194.9 251	27.3	73	20	20	16	10	8.2	B-PT1/8	17
NR 100R NR 100LR	105	200	286.2 326.2	130	150 200	M18×27	223.4 263.4	34.3	85	23	23	10	12	8.2	B-PT1/4	20

Model number coding

NR35 LRX 2 QZ KKHH C0 +1240L P T -Ⅱ

- NR35: Model number
- LRX: Type of LM block
- 2: No. of LM blocks used on the same rail
- QZ: With QZ Lubricator
- KKHH: Contamination protection accessory symbol (*1)
- C0: Radial clearance symbol (*2)
  Normal (No symbol)
  Light preload (C1)
  Medium preload (C0)
- +1240L: LM rail length (in mm)
- P: Accuracy symbol (*3)
  Normal grade (No Symbol)/High accuracy grade (H)
  Precision grade (P)/Super precision grade (SP)
  Ultra precision grade (UP)
- T: Symbol for LM rail jointed use
- -Ⅱ: Symbol for No. of rails used on the same plane (*4)

(*1) See contamination protection accessory on A1-494 (*2) See A1-70. (*3) See A1-76.
(*4) See A1-13.

Note) This model number indicates that a single-rail unit constitutes one set. (i.e., required number of sets when 2 rails are used in parallel is 2 at a minimum.)
Those models equipped with QZ Lubricator cannot have a grease nipple. When desiring a grease nipple for a model attached with QZ, contact THK.

Download data by searching for the corresponding model number on the Technical Support site. https://tech.thk.com

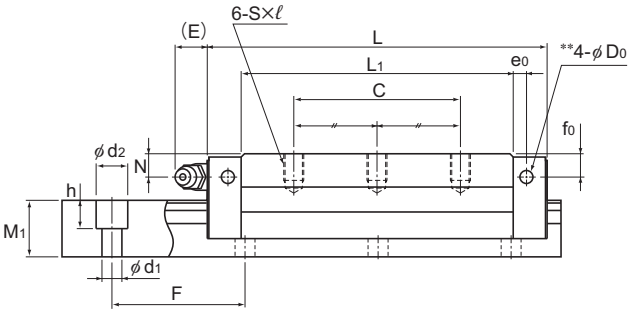

Model NR-LRX

Unit: mm

	LM rail dimensions						Basic load rating		Static permissible moment kN-m*					Mass	
	Width		Height	Pitch		Length*	C	C_0	M_A		M_B		M_C	LM block	LM rail
	W_1 0 -0.05	W_2	M_1	F	$d_1 \times d_2 \times h$	Max	kN	kN	1 block	Double blocks	1 block	Double blocks	1 block	kg	kg/m
	25	12.5	17	40	6×9.5×8.5	3000	37.1 45.4	68.1 90.8	0.57 0.989	3.04 4.91	0.346 0.597	1.84 2.95	0.703 0.937	0.4 0.5	2.9
	28	16	21	80	7×11×9	3000	54.7 66.9	98.1 130.8	0.986 1.71	5.17 8.34	0.599 1.03	3.13 5.02	1.15 1.53	0.7 0.9	4.2
	34	18	24.5	80	9×14×12	3000	72.4 89.6	124.6 169.1	1.37 2.46	7.38 12.1	0.835 1.49	4.48 7.3	1.74 2.36	1 1.3	6
	45	20.5	29	105	14×20×17	3090	110.2 132	197.6 255.8	2.81 4.87	14.7 23	1.72 2.94	8.95 13.8	3.72 4.81	1.8 2.3	9.5
	53	23.5	36.5	120	16×23×20	3060	141.9 175.1	250.2 338.4	4.22 7.27	21.8 35.9	2.56 4.4	13.2 21.7	5.37 7.27	3.3 4.3	14
	63	31.5	43	150	18×26×22	3000	208.7 268.9	351.7 505.5	6.87 13.8	35 65.4	4.16 8.31	21.2 39.3	8.94 12.9	6 8.5	19.6
	75	35	44	150	22×32×26	3000	271 355	610 800	14.4 25.4	73.3 118	8.91 15.4	44.7 71.4	19.3 25.2	8.7 11.6	24.6
	85	35.5	48	180	24×35×28	3000	336 435	751 972	20.3 34.7	102 160	12.4 21	62.6 96.2	26.8 34.6	12.3 15.8	30.5
	100	50	57	210	26×39×32	3000	479 599	1040 1300	34 47.3	167 238	20.7 29.2	101 146	43.4 54.6	21.8 26.1	42.6

Note) Pilot holes for side nipples** are not drilled through in order to prevent foreign material from entering the product.
THK will mount grease nipples per your request. Therefore, do not use the side nipple pilot holes** for purposes other than mounting a grease nipple.
The maximum length under "Length*" indicates the standard maximum length of an LM rail. (See A1-234.)
Static permissible moment*: 1 block: static permissible moment value with 1 LM block
Double blocks: static permissible moment value with 2 blocks closely contacting with each other

Options⇒A1-457

Models NRS-RX, NRS-LRX, NRS-R and NRS-LR

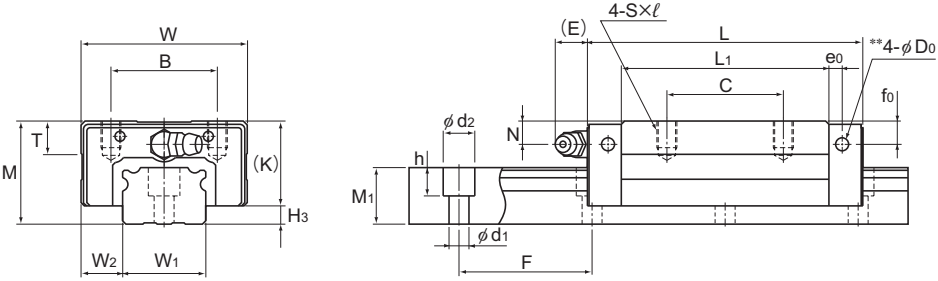

Model NRS-RX

Model No.	Outer dimensions			LM block dimensions													
	Height M	Width W	Length L	B	C	S×ℓ	L_1	T	K	N	f_0	E	e_0	D_0	Grease nipple	H_3
NRS 25RX NRS 25LRX	31	50	82.8 102	32	35 50	M6×8	61.4 80.6	9.7	25.5	7.8	5.1	12	4.5	3.9	B-M6F	5.5
NRS 30RX NRS 30LRX	38	60	98 120.5	40	40 60	M8×10	72.1 94.6	9.7	31	10.3	7	12	6.5	3.9	B-M6F	7
NRS 35RX NRS 35LRX	44	70	109.5 135	50	50 72	M8×12	79 104.5	11.7	35	12.1	8	12	6	5.2	B-M6F	9
NRS 45RX NRS 45LRX	52	86	138.2 171	60	60 80	M10×17	105 137.8	14.7	40.4	13.9	8	16	8.5	5.2	B-PT1/8	11.6
NRS 55RX NRS 55LRX	63	100	163.3 200.5	65	75 95	M12×18	123.6 160.8	17.7	49	16.6	10	16	10	5.2	B-PT1/8	14
NRS 65RX NRS 65LRX	75	126	186 246	76	70 110	M16×20	143.6 203.6	21.6	60	19	15	16	8.7	8.2	B-PT1/8	15
NRS 75R NRS 75LR	83	145	218 274	95	80 130	M18×25	170.2 226.2	25.3	68	18	17	16	9	8.2	B-PT1/8	15
NRS 85R NRS 85LR	90	156	246.7 302.8	100	80 140	M18×25	194.9 251	27.3	73	20	20	16	10	8.2	B-PT1/8	17
NRS 100R NRS 100LR	105	200	286.2 326.2	130	150 200	M18×27	223.4 263.4	34.3	85	23	23	10	12	8.2	B-PT1/4	20

Model number coding

NRS45 LRX 2 QZ ZZHH C0 +1200L P T -Ⅱ

- NRS45: Model number
- LRX: Type of LM block
- 2: No. of LM blocks used on the same rail
- QZ: With QZ Lubricator
- ZZHH: Contamination protection accessory symbol (*1)
- C0: Radial clearance symbol (*2) Normal (No symbol)/Light preload (C1) Medium preload (C0)
- +1200L: LM rail length (in mm)
- P: Accuracy symbol (*3) Normal grade (No Symbol)/High accuracy grade (H) Precision grade (P)/Super precision grade (SP) Ultra precision grade (UP)
- T: Symbol for LM rail jointed use
- -Ⅱ: Symbol for No. of rails used on the same plane (*4)

(*1) See contamination protection accessory on A1-494 (*2) See A1-70. (*3) See A1-76. (*4) See A1-13.

Note) This model number indicates that a single-rail unit constitutes one set. (i.e., required number of sets when 2 rails are used in parallel is 2 at a minimum.)
Those models equipped with QZ Lubricator cannot have a grease nipple. When desiring a grease nipple for a model attached with QZ, contact THK.

Download data by searching for the corresponding model number on the Technical Support site. https://tech.thk.com

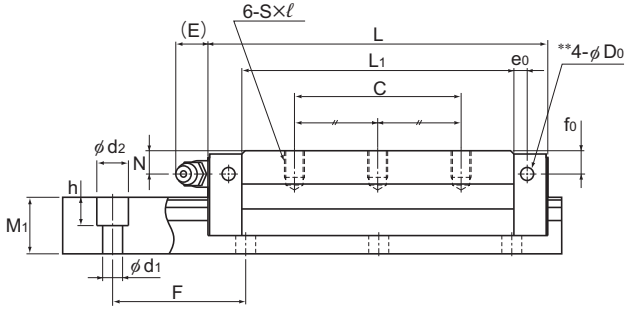

Model NRS-LRX

Unit: mm

	LM rail dimensions						Basic load rating		Static permissible moment kN-m*					Mass	
	Width		Height	Pitch		Length*	C	C_0	M_A		M_B		M_C	LM block	LM rail
	W_1 0 -0.05	W_2	M_1	F	$d_1 \times d_2 \times h$	Max	kN	kN	1 block	Double blocks	1 block	Double blocks	1 block	kg	kg/m
	25	12.5	17	40	6×9.5×8.5	3000	28.4 34.7	52.2 69.6	0.457 0.786	2.43 3.9	0.422 0.727	2.25 3.61	0.552 0.732	0.4 0.5	2.9
	28	16	21	80	7×11×9	3000	41.9 51.2	75.2 100.2	0.785 1.36	4.12 6.62	0.726 1.26	3.82 6.13	0.896 1.19	0.7 0.9	4.2
	34	18	24.5	80	9×14×12	3000	55.5 68.6	95.5 129.5	1.09 1.95	5.88 9.61	1.01 1.81	5.45 8.9	1.36 1.84	1 1.3	6
	45	20.5	29	105	14×20×17	3090	84.4 101.1	151.4 195.9	2.23 3.87	11.7 18.3	2.07 3.57	10.8 16.9	2.9 3.75	1.8 2.3	9.5
	53	23.5	36.5	120	16×23×20	3060	108.7 134.1	191.6 259.3	3.36 5.76	17.4 28.4	3.1 5.32	16.1 26.3	4.19 5.67	3.3 4.3	14
	63	31.5	43	150	18×26×22	3000	159.8 206	269.4 387.2	5.46 10.9	27.8 51.9	5.05 10.1	25.8 48	6.97 10.02	6 8.5	19.6
	75	35	44	150	22×32×26	3000	212 278	431 566	10.6 18.6	53.8 87	10.6 18.6	53.8 87	13.4 17.6	8.7 11.6	24.6
	85	35.5	48	180	24×35×28	3000	264 342	531 687	14.9 25.4	75.3 117	14.9 25.4	75.3 117	18.7 24.2	12.3 15.8	30.5
	100	50	57	210	26×39×32	3000	376 470	737 920	25.1 34.6	123 174	25.1 34.6	123 174	30.4 38.1	21.8 26.1	42.6

Note) Pilot holes for side nipples** are not drilled through in order to prevent foreign material from entering the product.
THK will mount grease nipples per your request. Therefore, do not use the side nipple pilot holes** for purposes other than mounting a grease nipple.
The maximum length under "Length*" indicates the standard maximum length of an LM rail. (See A1-234.)
Static permissible moment*: 1 block: static permissible moment value with 1 LM block
Double blocks: static permissible moment value with 2 blocks closely contacting with each other

Options⇒A1-457

Models NR-CX and NR-LCX

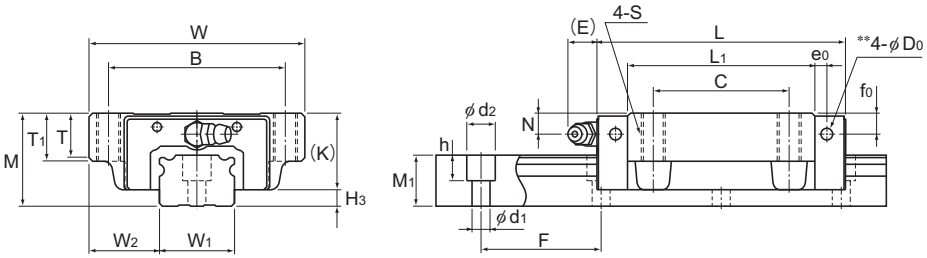

Model NR-CX

Model No.	Outer dimensions			LM block dimensions														
	Height M	Width W	Length L	B	C	S×ℓ	L_1	T	T_1	K	N	f_0	E	e_0	D_0	Grease nipple	H_3
NR 25CX NR 25LCX	31	72	82.8 102	59	45	M8	61.4 80.6	14.8	16	25.5	7.8	5.1	12	4.5	3.9	B-M6F	5.5
NR 30CX NR 30LCX	38	90	98 120.5	72	52	M10	72.1 94.6	16.9	18.1	31	10.3	7	12	6.5	3.9	B-M6F	7
NR 35CX NR 35LCX	44	100	109.5 135	82	62	M10	79 104.5	18.9	20.1	35	12.1	8	12	6	5.2	B-M6F	9
NR 45CX NR 45LCX	52	120	138.2 171	100	80	M12	105 137.8	20.6	22.1	40.4	13.9	8	16	8.5	5.2	B-PT1/8	11.6
NR 55CX NR 55LCX	63	140	163.3 200.5	116	95	M14	123.6 160.8	22.5	24	49	16.6	10	16	10	5.2	B-PT1/8	14
NR 65CX NR 65LCX	75	170	186 246	142	110	M16	143.6 203.6	26	28	60	19	15	16	8.7	8.2	B-PT1/8	15

Model number coding

NR35 CX 2 QZ KKHH C0 +1400L P T -Ⅱ

- NR35: Model number
- CX: Type of LM block
- 2: No. of LM blocks used on the same rail
- QZ: With QZ Lubricator
- KKHH: Contamination protection accessory symbol (*1)
- C0: Radial clearance symbol (*2)
  - Normal (No symbol)
  - Light preload (C1)
  - Medium preload (C0)
- +1400L: LM rail length (in mm)
- P: Accuracy symbol (*3)
  - Normal grade (No Symbol)/High accuracy grade (H)
  - Precision grade (P)/Super precision grade (SP)
  - Ultra precision grade (UP)
- T: Symbol for LM rail jointed use
- -Ⅱ: Symbol for No. of rails used on the same plane (*4)

(*1) See contamination protection accessory on A1-494 (*2) See A1-70. (*3) See A1-76. (*4) See A1-13.

Note) This model number indicates that a single-rail unit constitutes one set. (i.e., required number of sets when 2 rails are used in parallel is 2 at a minimum.)
Those models equipped with QZ Lubricator cannot have a grease nipple. When desiring a grease nipple for a model attached with QZ, contact THK.

Download data by searching for the corresponding model number on the Technical Support site. https://tech.thk.com

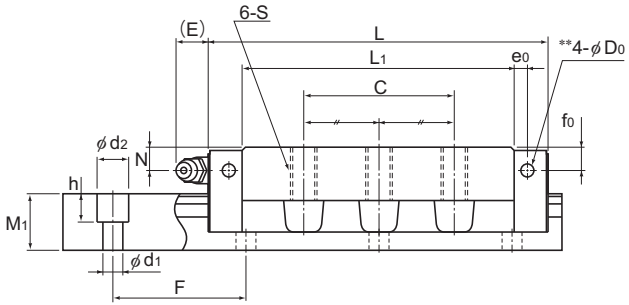

Model NR-LCX

Unit: mm

	LM rail dimensions						Basic load rating		Static permissible moment kN-m*					Mass	
	Width		Height	Pitch		Length*	C	C_0	M_A		M_B		M_C	LM block	LM rail
	W_1 0 -0.05	W_2	M_1	F	$d_1 \times d_2 \times h$	Max	kN	kN	1 block	Double blocks	1 block	Double blocks	1 block	kg	kg/m
	25	23.5	17	40	6×9.5×8.5	3000	37.1 45.4	68.1 90.8	0.57 0.989	3.04 4.91	0.346 0.597	1.84 2.95	0.703 0.937	0.6 0.8	2.9
	28	31	21	80	7×11×9	3000	54.7 66.9	98.1 130.8	0.986 1.71	5.17 8.34	0.599 1.03	3.13 5.02	1.15 1.53	1.1 1.5	4.2
	34	33	24.5	80	9×14×12	3000	72.4 89.6	124.6 169.1	1.37 2.46	7.38 12.1	0.835 1.49	4.48 7.3	1.74 2.36	1.6 2	6
	45	37.5	29	105	14×20×17	3090	110.2 132	197.6 255.8	2.81 4.87	14.7 23	1.72 2.94	8.95 13.8	3.72 4.81	2.7 3.6	9.5
	53	43.5	36.5	120	16×23×20	3060	141.9 175.1	250.2 338.4	4.22 7.27	21.8 35.9	2.56 4.4	13.2 21.7	5.37 7.27	4.5 5.9	14
	63	53.5	43	150	18×26×22	3000	208.7 268.9	351.7 505.5	6.87 13.8	35 65.4	4.16 8.31	21.2 39.3	8.94 12.9	7.8 11	19.6

Note) Pilot holes for side nipples** are not drilled through in order to prevent foreign material from entering the product.
THK will mount grease nipples per your request. Therefore, do not use the side nipple pilot holes** for purposes other than mounting a grease nipple.
The maximum length under "Length*" indicates the standard maximum length of an LM rail. (See A1-234.)
Static permissible moment*: 1 block: static permissible moment value with 1 LM block
Double blocks: static permissible moment value with 2 blocks closely contacting with each other

Options⇒A1-457

Models NRS-CX and NRS-LCX

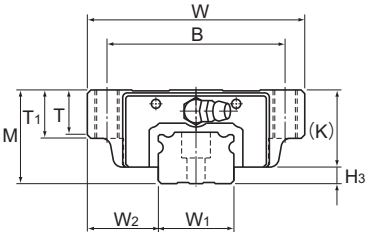

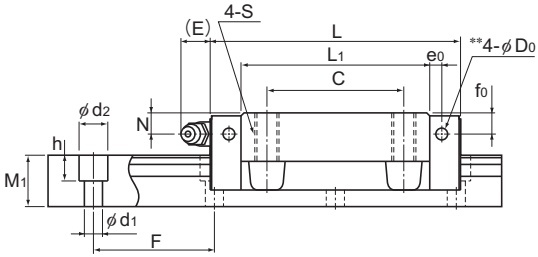

Model NRS-CX

Model No.	Outer dimensions			LM block dimensions														
	Height M	Width W	Length L	B	C	S×ℓ	L_1	T	T_1	K	N	f_0	E	e_0	D_0	Grease nipple	H_3
NRS 25CX NRS 25LCX	31	72	82.8 102	59	45	M8	61.4 80.6	14.8	16	25.5	7.8	5.1	12	4.5	3.9	B-M6F	5.5
NRS 30CX NRS 30LCX	38	90	98 120.5	72	52	M10	72.1 94.6	16.9	18.1	31	10.3	7	12	6.5	3.9	B-M6F	7
NRS 35CX NRS 35LCX	44	100	109.5 135	82	62	M10	79 104.5	18.9	20.1	35	12.1	8	12	6	5.2	B-M6F	9
NRS 45CX NRS 45LCX	52	120	138.2 171	100	80	M12	105 137.8	20.6	22.1	40.4	13.9	8	16	8.5	5.2	B-PT1/8	11.6
NRS 55CX NRS 55LCX	63	140	163.3 200.5	116	95	M14	123.6 160.8	22.5	24	49	16.6	10	16	10	5.2	B-PT1/8	14
NRS 65CX NRS 65LCX	75	170	186 246	142	110	M16	143.6 203.6	26	28	60	19	15	16	8.7	8.2	B-PT1/8	15

Model number coding

NRS45 LCX 2 QZ SSHH C0 +2040L P T -Ⅱ

- NRS45: Model number
- LCX: Type of LM block
- 2: No. of LM blocks used on the same rail
- QZ: With QZ Lubricator
- SSHH: Contamination protection accessory symbol (*1)
- C0: Radial clearance symbol (*2)
  - Normal (No symbol)
  - Light preload (C1)
  - Medium preload (C0)
- +2040L: LM rail length (in mm)
- P: Accuracy symbol (*3)
  - Normal grade (No Symbol)/High accuracy grade (H)
  - Precision grade (P)/Super precision grade (SP)
  - Ultra precision grade (UP)
- T: Symbol for LM rail jointed use
- -Ⅱ: Symbol for No. of rails used on the same plane (*4)

(*1) See contamination protection accessory on A1-494 (*2) See A1-70. (*3) See A1-76. (*4) See A1-13.

Note) This model number indicates that a single-rail unit constitutes one set. (i.e., required number of sets when 2 rails are used in parallel is 2 at a minimum.)
Those models equipped with QZ Lubricator cannot have a grease nipple. When desiring a grease nipple for a model attached with QZ, contact THK.

Download data by searching for the corresponding model number on the Technical Support site. https://tech.thk.com

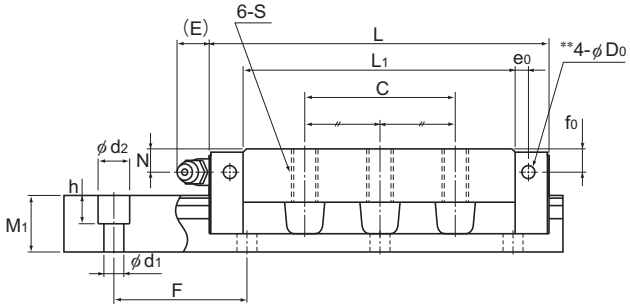

Model NRS-LCX

Unit: mm

	LM rail dimensions						Basic load rating		Static permissible moment kN-m*					Mass	
	Width		Height	Pitch		Length*	C	C_0	M_A		M_B		M_C	LM block	LM rail
	W_1 0 -0.05	W_2	M_1	F	$d_1 \times d_2 \times h$	Max	kN	kN	1 block	Double blocks	1 block	Double blocks	1 block	kg	kg/m
	25	23.5	17	40	6×9.5×8.5	3000	28.4 34.7	52.2 69.6	0.457 0.786	2.43 3.9	0.422 0.727	2.25 3.61	0.552 0.732	0.6 0.8	2.9
	28	31	21	80	7×11×9	3000	41.9 51.2	75.2 100.2	0.785 1.36	4.12 6.62	0.726 1.26	3.82 6.13	0.896 1.19	1.1 1.5	4.2
	34	33	24.5	80	9×14×12	3000	55.5 68.6	95.5 129.5	1.09 1.95	5.88 9.61	1.01 1.81	5.45 8.9	1.36 1.84	1.6 2	6
	45	37.5	29	105	14×20×17	3000	84.4 101.1	151.4 195.9	2.23 3.87	11.7 18.3	2.07 3.57	10.8 16.9	2.9 3.75	2.7 3.6	9.5
	53	43.5	36.5	120	16×23×20	3000	108.7 134.1	191.6 259.3	3.36 5.76	17.4 28.4	3.1 5.32	16.1 26.3	4.19 5.67	4.5 5.9	14
	63	53.5	43	150	18×26×22	3000	159.8 206	269.4 387.2	5.46 10.9	27.8 51.9	5.05 10.1	25.8 48	6.97 10.02	7.8 11	19.6

Note) Pilot holes for side nipples** are not drilled through in order to prevent foreign material from entering the product.
THK will mount grease nipples per your request. Therefore, do not use the side nipple pilot holes** for purposes other than mounting a grease nipple.
The maximum length under "Length*" indicates the standard maximum length of an LM rail. (See A1-234.)
Static permissible moment*: 1 block: static permissible moment value with 1 LM block
Double blocks: static permissible moment value with 2 blocks closely contacting with each other

Options⇒A1-457

Models NR-A, NR-LA, NRS-A and NRS-LA

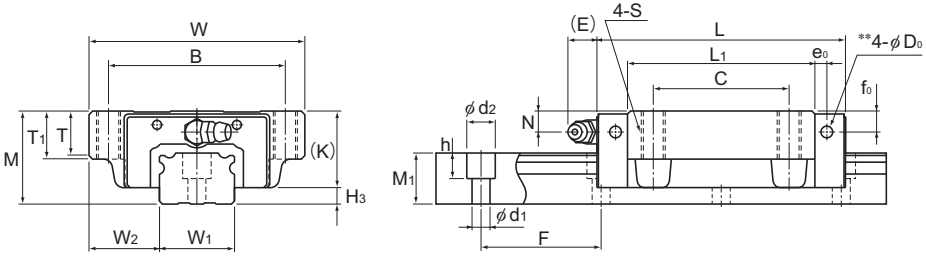

Models NR-A and NRS-A

Model No.	Outer dimensions			LM block dimensions														
	Height M	Width W	Length L	B	C	S×ℓ	L_1	T	T_1	K	N	f_0	E	e_0	D_0	Grease nipple	H_3
NR 75A NR 75LA	83	195	218 274	165	130	M18×30	170.2 226.2	28	30	68	18	17	16	9	8.2	B-PT1/8	15
NR 85A NR 85LA	90	215	246.7 302.8	185	140	M20×34	194.9 251	32	34	73	20	20	16	10	8.2	B-PT1/8	17
NR 100A NR 100LA	105	260	286.2 326.2	220	150 200	M20×38	223.4 263.4	35	38	85	23	23	10	12	8.2	B-PT1/4	20
NRS 75A NRS 75LA	83	195	218 274	165	130	M18×30	170.2 226.2	28	30	68	18	17	16	9	8.2	B-PT1/8	15
NRS 85A NRS 85LA	90	215	246.7 302.8	185	140	M20×34	194.9 251	32	34	73	20	20	16	10	8.2	B-PT1/8	17
NRS 100A NRS 100LA	105	260	286.2 326.2	220	150 200	M20×38	223.4 263.4	35	38	85	23	23	10	12	8.2	B-PT1/4	20

Model number coding

NR75 A 2 QZ KKHH C0 +1400L P Z T -Ⅱ

- NR75: Model number
- A: Type of LM block
- 2: No. of LM blocks used on the same rail
- QZ: With QZ Lubricator
- KKHH: Contamination protection accessory symbol (*1)
- C0: Radial clearance symbol (*2)
  - Normal (No symbol)
  - Light preload (C1)
  - Medium preload (C0)
- +1400L: LM rail length (in mm)
- P: Accuracy symbol (*3)
  - Normal grade (No Symbol)/High accuracy grade (H)
  - Precision grade (P)/Super precision grade (SP)
  - Ultra precision grade (UP)
- Z: With plate cover or steel tape (*4)
- T: Symbol for LM rail jointed use
- -Ⅱ: Symbol for No. of rails used on the same plane (*5)

(*1) See contamination protection accessory on A1-494. (*2) See A1-70. (*3) See A1-76.
(*4) Specify the plate cover or the steel tape. (*5) See A1-13.

Note) This model number indicates that a single-rail unit constitutes one set. (i.e., required number of sets when 2 rails are used in parallel is 2 at a minimum.)
Those models equipped with QZ Lubricator cannot have a grease nipple. When desiring a grease nipple for a model attached with QZ, contact THK.

Download data by searching for the corresponding model number on the Technical Support site. https://tech.thk.com

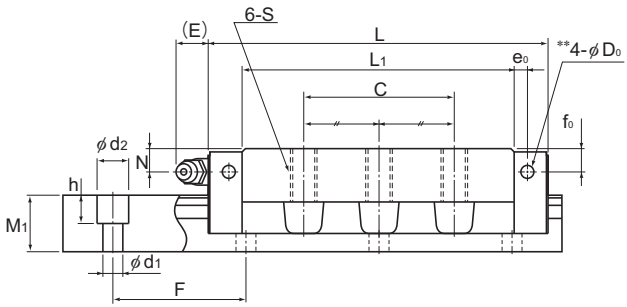

Models NR-LA and NRS-LA

Unit: mm

	LM rail dimensions						Basic load rating		Static permissible moment kN-m*					Mass	
	Width		Height	Pitch		Length*	C	C_0	M_A		M_B		M_C	LM block	LM rail
	W_1 0 -0.05	W_2	M_1	F	$d_1 \times d_2 \times h$	Max	kN	kN	1 block	Double blocks	1 block	Double blocks	1 block	kg	kg/m
	75	60	44	150	22×32×26	3000	271 355	610 800	14.4 25.4	73.3 118	8.91 15.4	44.7 71.4	19.3 25.2	11.3 15	24.6
	85	65	48	180	24×35×28	3000	336 435	751 972	20.3 34.7	102 160	12.4 21	62.6 96.2	26.8 34.6	16.2 20.7	30.5
	100	80	57	210	26×39×32	3000	479 599	1040 1300	34 47.3	167 238	20.7 29.2	101 146	43.4 54.6	26.7 31.2	42.6
	75	60	44	150	22×32×26	3000	212 278	431 566	10.6 18.6	53.8 87	10.6 18.6	53.8 87	13.4 17.6	11.3 15	24.6
	85	65	48	180	24×35×28	3000	264 342	531 687	14.9 25.4	75.3 117	14.9 25.4	75.3 117	18.7 24.2	16.2 20.7	30.5
	100	80	57	210	26×39×32	3000	376 470	737 920	25.1 34.6	123 174	25.1 34.6	123 174	30.4 38.1	26.7 31.2	42.6

Note) Pilot holes for side nipples** are not drilled through in order to prevent foreign material from entering the product.
THK will mount grease nipples per your request. Therefore, do not use the side nipple pilot holes** for purposes other than mounting a grease nipple.
The maximum length under "Length*" indicates the standard maximum length of an LM rail. (See A1-234.)
Static permissible moment* : 1 block: static permissible moment value with 1 LM block
Double blocks: static permissible moment value with 2 blocks closely contacting with each other

Options⇒A1-457

Models NR-B, NR-LB, NRS-B and NRS-LB

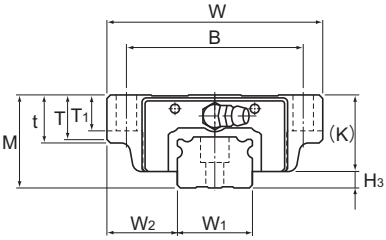

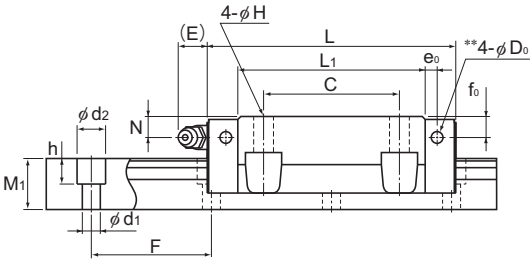

Models NR-B and NRS-B

Model No.	Outer dimensions			LM block dimensions															
	Height M	Width W	Length L	B	C	H	L_1	t	T	T_1	K	N	f_0	E	e_0	D_0	Grease nipple	H_3
NR 75B NR 75LB	83	195	218 274	165	130	18	170.2 226.2	30	28	26	68	18	17	16	9	8.2	B-PT1/8	15
NR 85B NR 85LB	90	215	246.7 302.8	185	140	18	194.9 251	34	32	28	73	20	20	16	10	8.2	B-PT1/8	17
NR 100B NR 100LB	105	260	286.2 326.2	220	150 200	20	223.4 263.4	38	35	32	85	23	23	10	12	8.2	B-PT1/4	20
NRS 75B NRS 75LB	83	195	218 274	165	130	18	170.2 226.2	30	28	26	68	18	17	16	9	8.2	B-PT1/8	15
NRS 85B NRS 85LB	90	215	246.7 302.8	185	140	18	194.9 251	34	32	28	73	20	20	16	10	8.2	B-PT1/8	17
NRS 100B NRS 100LB	105	260	286.2 326.2	220	150 200	20	223.4 263.4	38	35	32	85	23	23	10	12	8.2	B-PT1/4	20

Model number coding

NR75 B 2 QZ DDHH C0 +1080L P Z T -Ⅱ

- NR75: Model number
- B: Type of LM block
- 2: No. of LM blocks used on the same rail
- QZ: With QZ Lubricator
- DDHH: Contamination protection accessory symbol (*1)
- C0: Radial clearance symbol (*2)
  - Normal (No symbol)
  - Light preload (C1)
  - Medium preload (C0)
- +1080L: LM rail length (in mm)
- P: Accuracy symbol (*3)
  - Normal grade (No Symbol)/High accuracy grade (H)
  - Precision grade (P)/Super precision grade (SP)
  - Ultra precision grade (UP)
- Z: With plate cover or steel tape (*4)
- T: Symbol for LM rail jointed use
- -Ⅱ: Symbol for No. of rails used on the same plane (*5)

(*1) See contamination protection accessory on A1-494. (*2) See A1-70. (*3) See A1-76.
(*4) Specify the plate cover or the steel tape. (*5) See A1-13.

Note) This model number indicates that a single-rail unit constitutes one set. (i.e., required number of sets when 2 rails are used in parallel is 2 at a minimum.)
Those models equipped with QZ Lubricator cannot have a grease nipple. When desiring a grease nipple for a model attached with QZ, contact THK.

Download data by searching for the corresponding model number on the Technical Support site. https://tech.thk.com

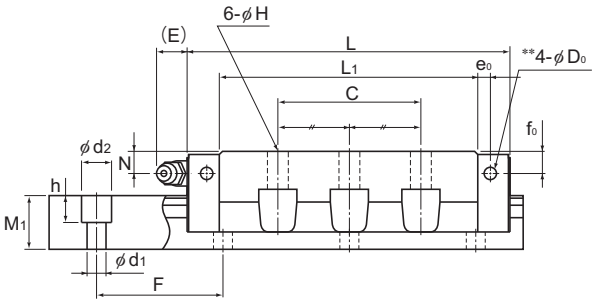

Models NR-LB and NRS-LB

Unit: mm

	LM rail dimensions						Basic load rating		Static permissible moment kN-m*					Mass	
	Width		Height	Pitch		Length*	C	C_0	M_A		M_B		M_C	LM block	LM rail
	W_1 0 -0.05	W_2	M_1	F	$d_1 \times d_2 \times h$	Max	kN	kN	1 block	Double blocks	1 block	Double blocks	1 block	kg	kg/m
	75	60	44	150	22×32×26	3000	271 355	610 800	14.4 25.4	73.3 118	8.91 15.4	44.7 71.4	19.3 25.2	11.3 15	24.6
	85	65	48	180	24×35×28	3000	336 435	751 972	20.3 34.7	102 160	12.4 21	62.6 96.2	26.8 34.6	16.2 20.7	30.5
	100	80	57	210	26×39×32	3000	479 599	1040 1300	34 47.3	167 238	20.7 29.2	101 146	43.4 54.6	26.7 31.2	42.6
	75	60	44	150	22×32×26	3000	212 278	431 566	10.6 18.6	53.8 87	10.6 18.6	53.8 87	13.4 17.6	11.3 15	24.6
	85	65	48	180	24×35×28	3000	264 342	531 687	14.9 25.4	75.3 117	14.9 25.4	75.3 117	18.7 24.2	16.2 20.7	30.5
	100	80	57	210	26×39×32	3000	376 470	737 920	25.1 34.6	123 174	25.1 34.6	123 174	30.4 38.1	26.7 31.2	42.6

Note) Pilot holes for side nipples** are not drilled through in order to prevent foreign material from entering the product.
THK will mount grease nipples per your request. Therefore, do not use the side nipple pilot holes** for purposes other than mounting a grease nipple.
The maximum length under "Length*" indicates the standard maximum length of an LM rail. (See A1-234.)
Static permissible moment* : 1 block: static permissible moment value with 1 LM block
Double blocks: static permissible moment value with 2 blocks closely contacting with each other

Options⇒A1-457

Standard Length and Maximum Length of the LM Rail

Table1 shows the standard lengths and the maximum lengths of models NR/NRS-X variations. If the maximum length of the desired LM rail exceeds them, jointed rails will be used. Contact THK for details. For the G dimension when a special length is required, we recommend selecting the corresponding G value from the table. The longer the G dimension is, the less stable the G area may become after installation, thus causing an adverse impact to accuracy.

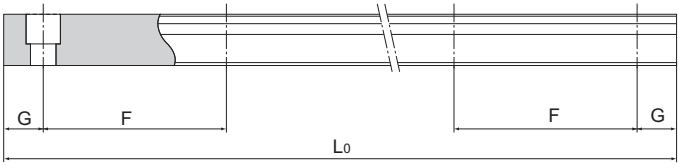

Table1 Standard Length and Maximum Length of the LM Rail for Models NR/NRS-X

Unit: mm

Model No.	NR/NRS25X	NR/NRS30X	NR/NRS35X	NR/NRS45X	NR/NRS55X	NR/NRS65X	NR/NRS75	NR/NRS85	NR/NRS100
LM rail standard length (L_0)	230	280	280	570	780	1270	1280	1530	1340
	270	360	360	675	900	1570	1580	1890	1760
	350	440	440	780	1020	2020	2030	2250	2180
	390	520	520	885	1140	2620	2630	2610	2600
	470	600	600	990	1260				
	510	680	680	1095	1380				
	590	760	760	1200	1500				
	630	840	840	1305	1620				
	710	920	920	1410	1740				
	750	1000	1000	1515	1860				
	830	1080	1080	1620	1980				
	950	1160	1160	1725	2100				
	990	1240	1240	1830	2220				
	1070	1320	1320	1935	2340				
	1110	1400	1400	2040	2460				
	1190	1480	1480	2145	2580				
	1230	1560	1560	2250	2700				
	1310	1640	1640	2355	2820				
	1350	1720	1720	2460	2940				
	1430	1800	1800	2565	3060				
	1470	1880	1880	2670					
	1550	1960	1960	2775					
	1590	2040	2040	2880					
	1710	2200	2200	2985					
	1830	2360	2360	3090					
	1950	2520	2520						
	2070	2680	2680						
	2190	2840	2840						
	2310	3000	3000						
	2430								
	2470								
Standard pitch F	40	80	80	105	120	150	150	180	210
G	15	20	20	22.5	30	35	40	45	40
Max length	3000	3000	3000	3090	3060	3000	3000	3000	3000

Note1) The maximum length varies with accuracy grades. Contact THK for details.
Note2) If jointed rails are not allowed and a greater length than the maximum values above is required, contact THK.

HRW

LM Guide Wide Rail Model HRW

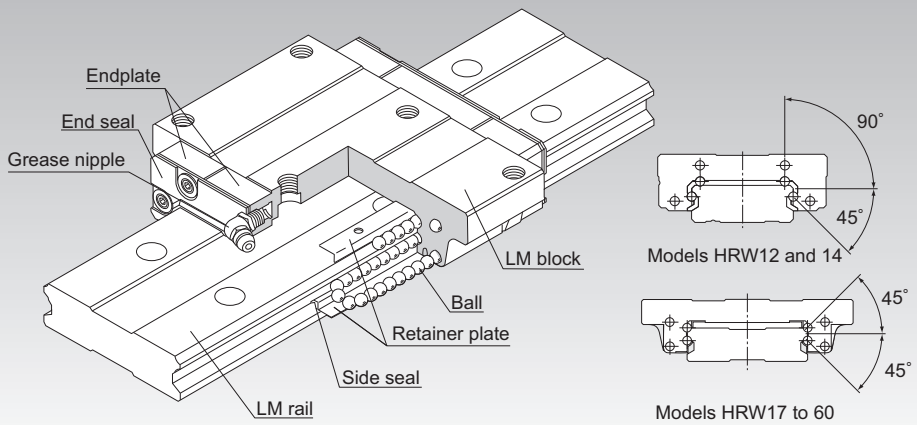

Cross section

Point of Selection	**A1-10**
Point of Design	**A1-434**
Options	**A1-457**
Model No.	**A1-522**
Precautions on Use	**A1-528**
Accessories for Lubrication	**A24-1**
Mounting Procedure and Maintenance	**B1-89**
Equivalent moment factor	**A1-43**
Rated Loads in All Directions	**A1-58**
Equivalent factor in each direction	**A1-60**
Radial Clearance	**A1-71**
Accuracy Standards	**A1-76**
Shoulder Height of the Mounting Base and the Corner Radius	**A1-447**
Permissible Error of the Mounting Surface	**A1-451**
Dimensions of Each Model with an Option Attached	**A1-470**

Structure and Features

Balls roll in four rows of raceways precision-ground on an LM rail and an LM block, and endplates incorporated in the LM block allow the balls to circulate.
Since retainer plates hold the balls, they do not fall off even if the LM rail is pulled out. (except models HRW 12 and 14LR).
Each row of balls is placed at a contact angle of 45° so that the rated loads applied to the LM block are uniform in the four directions (radial, reverse radial and lateral directions), enabling the LM Guide to be used in all orientations. In addition, the LM block can receive a well-balanced preload, increasing the rigidity in four directions while maintaining a constant, low friction coefficient. In a low center of gravity structure with a large rail width and a low overall height, this model can be used in places where space saving is required or high rigidity against a moment is required even in a single axis configuration.

[Compact, Heavy Load]
Since the number of effective balls is large, this model is highly rigid in all directions. It can adequately receive a moment even in a single rail configuration.
Additionally, since the second moment of inertia of the rail is large, the rigidity in the lateral directions is also high. Accordingly, it does not need reinforcement such as a side support.

[Self-adjustment Capability]
The self-adjustment capability through front-to-front configuration of THK's unique circular-arc grooves (DF set) enables a mounting error to be absorbed even under a preload, thus to achieve highly accurate, smooth straight motion.

Types and Features

Model HRW-CA

Specification Table⇒A1-240

The flange of this LM block has tapped holes.
Can be mounted from the top or the bottom.

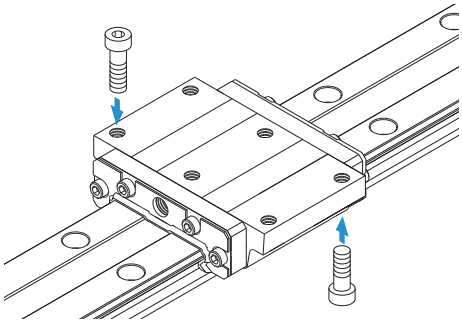

Model HRW-CR

Specification Table⇒A1-242

The LM block has tapped holes.

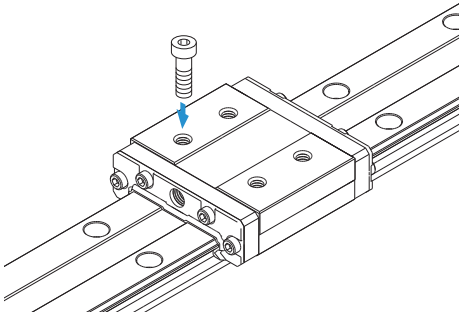

Miniature Type Model HRW-LRM

Specification Table⇒A1-242

The LM block has tapped holes.

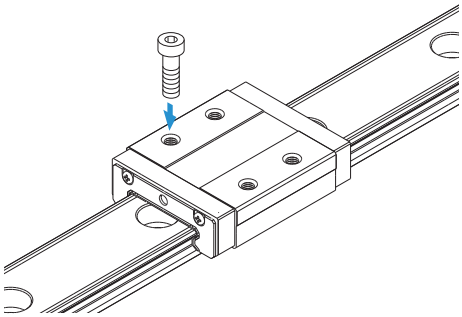

Models HRW-CA and HRW-CAM

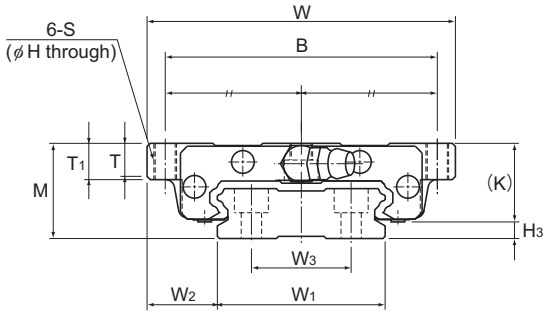

Model No.	Outer dimensions			LM block dimensions											
	Height M	Width W	Length L	B	C	H	S	L_1	T	T_1	K	N	E	Grease nipple	H_3
HRW 17CA HRW 17CAM	17	60	50.8	53	26	3.3	M4	33.6	5.5	6	14.5	4	2	PB107	2.5
HRW 21CA HRW 21CAM	21	68	58.8	60	29	4.4	M5	40	7.3	8	18	4.5	12	B-M6F	3
HRW 27CA HRW 27CAM	27	80	72.8	70	40	5.3	M6	51.8	9.5	10	24	6	12	B-M6F	3
HRW 35CA HRW 35CAM	35	120	106.6	107	60	6.8	M8	77.6	13	14	31	8	12	B-M6F	4
HRW 50CA	50	162	140.5	144	80	8.6	M10	103.5	16.5	18	46.6	14	16	B-PT1/8	3.4
HRW 60CA	60	200	158.9	180	80	10.5	M12	117.5	23.5	25	53.5	15	16	B-PT1/8	6.5

Note) Symbol M indicates that stainless steel is used in the LM block, LM rail and balls. Those models marked with this symbol are therefore highly resistant to corrosion and environment.

Model number coding

HRW35 CA 2 UU C1 M +1000L P T M

- HRW35: Model number
- CA: Type of LM block
- 2: No. of LM blocks used on the same rail
- UU: Contamination protection accessory symbol (*1)
- C1: Radial clearance symbol (*2)
  - Normal (No symbol)
  - Light preload (C1)
  - Medium preload (C0)
- M: Stainless steel LM block
- +1000L: LM rail length (in mm)
- P: Accuracy symbol (*3)
  - Normal grade (No Symbol)/High accuracy grade (H)
  - Precision grade (P)/Super precision grade (SP)
  - Ultra precision grade (UP)
- T: Symbol for LM rail jointed use
- M: Stainless steel LM rail

(*1) See contamination protection accessory on A1-494. (*2) See A1-71. (*3) See A1-76.

Download data by searching for the corresponding model number on the Technical Support site. https://tech.thk.com

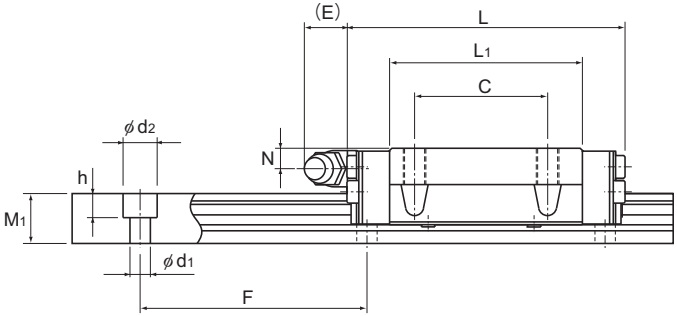

Unit: mm

	LM rail dimensions							Basic load rating		Static permissible moment kN-m*					Mass	
	Width			Height	Pitch		Length*	C	C_0	M_A		M_B		M_C	LM block	LM rail
	W_1 ±0.05	W_2	W_3	M_1	F	$d_1 \times d_2 \times h$	Max	kN	kN	1 block	Double blocks	1 block	Double blocks	1 block	kg	kg/m
	33	13.5	18	9	40	4.5×7.5×5.3	1900 (800)	5.53	9.1	0.0464	0.272	0.0464	0.272	0.144	0.15	2.1
	37	15.5	22	11	50	4.5×7.5×5.3	3000 (1000)	8.02	12.9	0.0784	0.445	0.0784	0.445	0.219	0.25	2.9
	42	19	24	15	60	4.5×7.5×5.3	3000 (1200)	14.2	21.6	0.166	0.923	0.166	0.923	0.423	0.5	4.3
	69	25.5	40	19	80	7×11×9	3000 (2120)	33.8	48.6	0.559	3.03	0.559	3.03	1.59	1.4	9.9
	90	36	60	24	80	9×14×12	3000	62.4	86.3	1.32	7.08	1.32	7.08	3.67	4	14.6
	120	40	80	31	105	11×17.5×14	3000	80.3	109	1.88	10.1	1.88	10.1	6.17	5.7	27.8

Note) The maximum length under "Length*" indicates the standard maximum length of an LM rail. (See A1-244.)
Static permissible moment*: 1 block: static permissible moment value with 1 LM block
Double blocks: static permissible moment value with 2 blocks closely contacting with each other

Options⇒A1-457

Models HRW-CR, HRW-CRM and HRW-LRM

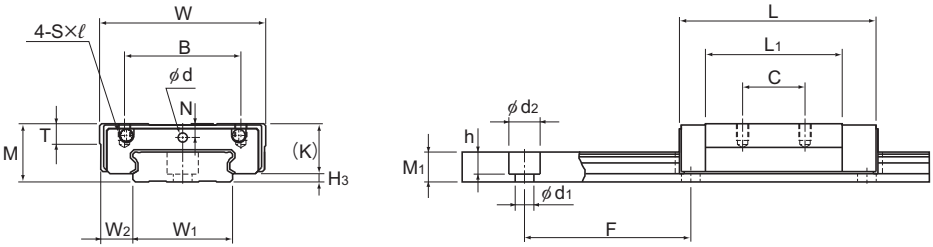

Models HRW12 and 14LRM

Model No.	Outer dimensions			LM block dimensions										
	Height M	Width W	Length L	B	C	S×ℓ	L_1	T	K	N	E	Greasing hole d	Grease nipple	H_3
HRW 12LRM	12	30	37	21	12	M3×3.5	27	4	10	2.8	—	2.2	—	2
HRW 14LRM	14	40	45.5	28	15	M3×4	32.9	5	12	3.3	—	2.2	—	2
HRW 17CR HRW 17CRM	17	50	50.8	29	15	M4×5	33.6	6	14.5	4	2	—	PB107	2.5
HRW 21CR HRW 21CRM	21	54	58.8	31	19	M5×6	40	8	18	4.5	12	—	B-M6F	3
HRW 27CR HRW 27CRM	27	62	72.8	46	32	M6×6	51.8	10	24	6	12	—	B-M6F	3
HRW 35CR HRW 35CRM	35	100	106.6	76	50	M8×8	77.6	14	31	8	12	—	B-M6F	4
HRW 50 CR	50	130	140.5	100	65	M10×15	103.5	18	46.6	14	16	—	B-PT1/8	3.4

Note) Symbol M indicates that stainless steel is used in the LM block, LM rail and balls. Those models marked with this symbol are therefore highly resistant to corrosion and environment.

Model number coding

HRW27 CR 2 UU C1 M +820L P T M

- HRW27: Model number
- CR: Type of LM block
- 2: No. of LM blocks used on the same rail
- UU: Contamination protection accessory symbol (*1)
- C1: Radial clearance symbol (*2) Normal (No symbol) Light preload (C1) Medium preload (C0)
- M: Stainless steel LM block
- +820L: LM rail length (in mm)
- P: Symbol for LM rail jointed use
- T: Accuracy symbol (*3) Normal grade (No Symbol)/High accuracy grade (H) Precision grade (P)/Super precision grade (SP) Ultra precision grade (UP)
- M: Stainless steel LM rail

(*1) See contamination protection accessory on A1-494. (*2) See A1-71. (*3) See A1-76.

Download data by searching for the corresponding model number on the Technical Support site. https://tech.thk.com

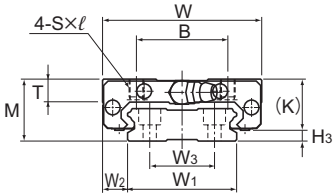

Models HRW17 and 21CR/CRM

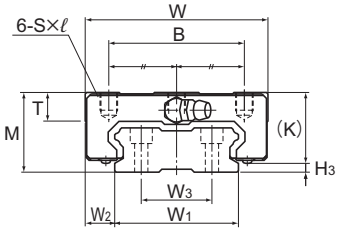

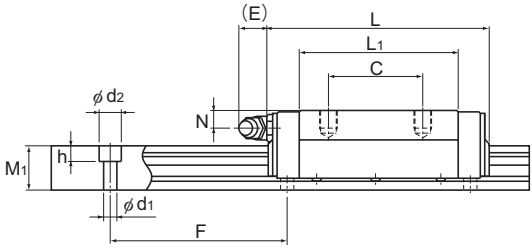

Models HRW27 to 50CR/CRM

Unit: mm

	LM rail dimensions							Basic load rating		Static permissible moment kN-m*					Mass	
	Width			Height	Pitch		Length*	C	C_0	M_A		M_B		M_C	LM block	LM rail
	W_1 ±0.05	W_2	W_3	M_1	F	$d_1 \times d_2 \times h$	Max	kN	kN	1 block	Double blocks	1 block	Double blocks	1 block	kg	kg/m
	18	6	—	6.5	40	4.5×8×4.5	(1000)	3.29	7.16	0.0262	0.138	0.013	0.069	0.051	0.045	0.79
	24	8	—	7.2	40	4.5×7.5×5.3	(1430)	5.38	11.4	0.0499	0.273	0.025	0.137	0.112	0.08	1.2
	33	8.5	18	9	40	4.5×7.5×5.3	1900 (800)	5.53	9.1	0.0464	0.272	0.0464	0.272	0.144	0.12	2.1
	37	8.5	22	11	50	4.5×7.5×5.3	3000 (1000)	8.02	12.9	0.0784	0.445	0.0784	0.445	0.219	0.19	2.9
	42	10	24	15	60	4.5×7.5×5.3	3000 (1200)	14.2	21.6	0.166	0.923	0.166	0.923	0.423	0.37	4.3
	69	15.5	40	19	80	7×11×9	3000 (2120)	33.8	48.6	0.559	3.03	0.559	3.03	1.59	1.2	9.9
	90	20	60	24	80	9×14×12	3000	62.4	86.3	1.32	7.08	1.32	7.08	3.67	3.2	14.6

Note) The maximum length under "Length*" indicates the standard maximum length of an LM rail. (See A1-244.)
Static permissible moment*: 1 block: static permissible moment value with 1 LM block
Double blocks: static permissible moment value with 2 blocks closely contacting with each other

Options⇒A1-457

Standard Length and Maximum Length of the LM Rail

Table1 shows the standard and maximum lengths of the HRW model rail. If a rail length longer than the listed max length is required, rails may be jointed to meet the overall length. Contact THK for details. For special rail lengths, it is recommended to use a value corresponding to the G dimension from the table. As the G dimension increases, this portion becomes less stable and the accuracy performance is severely impacted.
For the G dimension when a special length is required, we recommend selecting the corresponding G value from the table. The longer the G dimension is, the less stable the G area may become after installation, thus causing an adverse impact to accuracy.

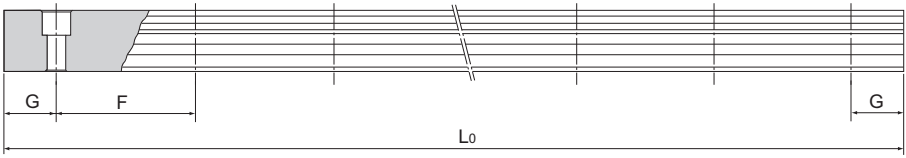

Table1 Standard Length and Maximum Length of the LM Rail for Model HRW

Unit: mm

Model No.	HRW 12	HRW 14	HRW 17	HRW 21	HRW 27	HRW 35	HRW 50	HRW 60
LM rail standard length (L_o)	70 110 150 190 230 270 310 390 470	70 110 150 190 230 270 310 390 470 550 670	110 190 310 470 550	130 230 380 480 580 780	160 280 340 460 640 820	280 440 760 1000 1240 1560	280 440 760 1000 1240 1640 2040	570 885 1200 1620 2040 2460
Standard pitch F	40	40	40	50	60	80	80	105
G	15	15	15	15	20	20	20	22.5
Max length	(1000)	(1430)	1900 (800)	3000 (1000)	3000 (1200)	3000 (2120)	3000	3000

Note1) The maximum length varies with accuracy grades. Contact THK for details.
Note2) If jointed rails are not allowed and a greater length than the maximum values above is required, contact THK.
Note3) The figures in the parentheses indicate the maximum lengths of stainless steel made models.

Prevention of LM block from falling off of LM rail

In miniature model HRW, the balls fall out if the LM block comes off the LM rail.
For this reason, LM Guide assemblies are delivered with a part which prevents the LM block from coming off the rail. If you remove this part when using the product, please take precautions to avoid overrunning the blocks off of the rail.

RSR

LM Guide Miniature Types Model RSR

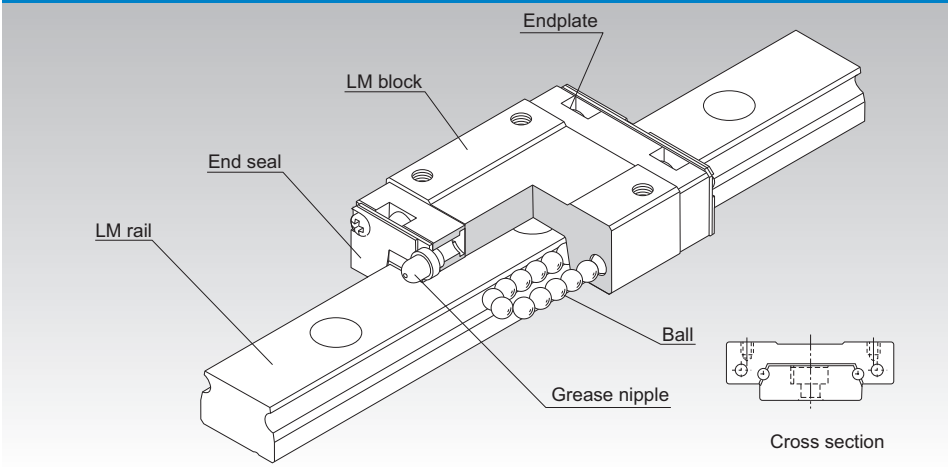

Point of Selection A1-10

Point of Design A1-434

Options A1-457

Model No. A1-522

Precautions on Use A1-528

Accessories for Lubrication A24-1

Mounting Procedure and Maintenance B1-89

Equivalent moment factor A1-43

Rated Loads in All Directions A1-58

Equivalent factor in each direction A1-60

Radial Clearance A1-71

Accuracy Standards A1-82

Shoulder Height of the Mounting Base and the Corner Radius A1-449

Permissible Error of the Mounting Surface A1-451

Flatness of the Mounting Surface A1-452

Dimensions of Each Model with an Option Attached A1-470

Structure and Features

With models RSR and RSR-W, balls roll in two rows of raceways precision-ground on an LM rail and an LM block, and endplates incorporated in the LM block allow the balls to circulate.
Since balls circulate in a compact structure, the LM Block is able to provide infinite straight motion and thus infinite stroke.
The LM block is designed to have a shape with high rigidity in a limited space, and in combination with large-diameter balls, demonstrates high rigidity in all directions.

[Ultra Compact]

The absence of cage displacement, a problem that cross-roller guides and types of ball slides with finite stroke tend to cause, make these models highly reliable LM systems.

[Capable of Receiving Loads in All Directions]

These models are capable of receiving loads in all directions, and a single-rail guide can adequately operate under a small moment load. Model RSR-W, in particular, has a greater number of effective balls and a broader LM rail to increase its rigidity against a moment. Thus, it achieves a more compact structure and more durable straight motion than a pair of linear bushes in parallel use.

[Stainless Steel Type also Available]

A special type where LM block, LM rail and balls are made of stainless steel is also available.

Types and Features

Model RSR-M

Specification Table⇒A1-252

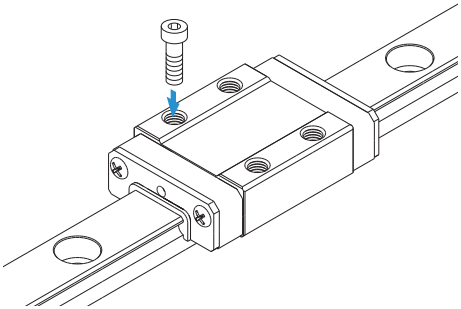

Models RSR-WM/WVM

Specification Table⇒A1-252

These models have greater overall LM block lengths (L), broader widths (W) and greater rated loads and permissible moments than standard types.

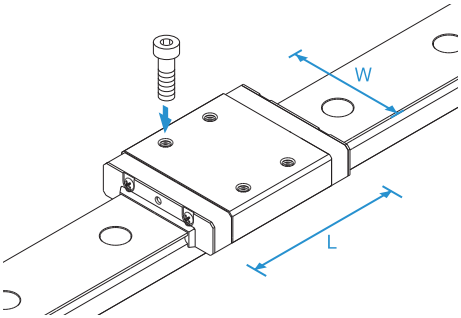

Model RSR-N

Specification Table⇒A1-252

It has a longer overall LM block length (L) and a greater rated load than standard types.

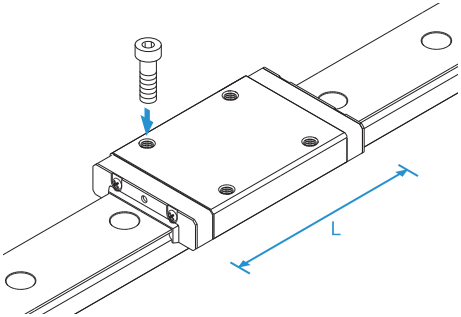

Model RSR-WN

Specification Table⇒A1-252

It has a longer overall LM block length (L), a greater rated load than standard types. Achieves the greatest load capacity among the miniature type LM Guide models.

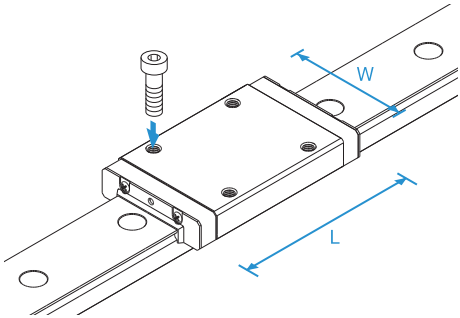

Accuracy of the Mounting Surface

Model RSR uses Gothic arch grooves in the ball raceways. When two rails of RSR are used in parallel, any error in accuracy of the mounting surface may increase rolling resistance and negatively affect the smooth motion of the guide. For specific accuracy of the mounting surface, see [Flatness of the Mounting Surface] on A1-452.

Models RSR-M, RSR-N, RSR-WM, RSR-WN and RSR-WVM

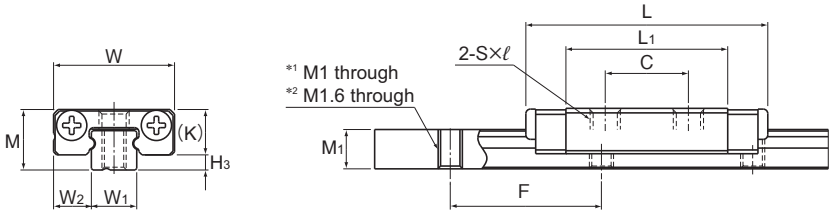

Models RSR2N, RSR3N

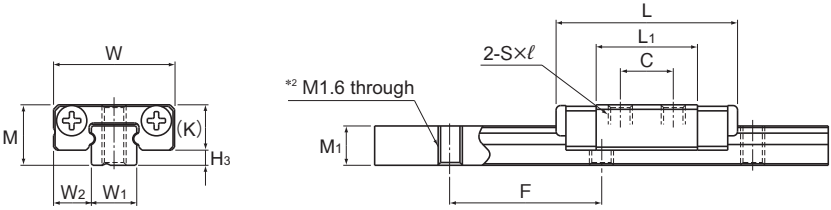

Model RSR3M

Model No.	Outer dimensions			LM block dimensions										
	Height M	Width W	Length L	B	C	S×ℓ	L_1	T	K	N	E	Greasing hole d	Grease nipple	H_3
RSR 2N RSR 2WN	3.2 4	6 10	12.4 16.7	—	4 6.5	M1.4×1.1 M2×1.3	8.84 11.9	—	2.5 3	—	—	—	—	0.7 1
RSR 3M RSR 3N	4	8	12 16	—	3.5 5.5	M1.6×1.3 M2×1.3	6.7 10.7	—	3	—	—	—	—	1
RSR 3WM RSR 3WN	4.5	12	14.9 19.9	—	4.5 8	M2×1.7	8.5 13.3	—	3.5	0.8	—	0.8	—	1
RSR 14WVM	15	50	50	35	18	M4×4.5	34.3	6	11.5	3	4	—	PB107	3.5

Note) Since stainless steel is used in the LM block, LM rail and balls, these models are highly resistant to corrosion and environment.
Models RSR2 and 3 do not have an oil hole. When lubricating them, apply a lubricant directly to the LM rail raceways.
No contamination protection seal for RSR2N/2WN/3M/3N.

Model number coding

2 RSR3W M UU C1 +80L P M -Ⅱ

- 2: No. of LM blocks used on the same rail
- RSR3W: Model number
- M: Stainless steel LM rail
- UU: Contamination protection accessory symbol (*1)
- C1: Radial clearance symbol (*2) Normal (No symbol) Light preload (C1)
- +80L: LM rail length (in mm)
- P: Accuracy symbol (*3) Normal grade (No Symbol)/Precision grade (P)
- -Ⅱ: Symbol for No. of rails used on the same plane (*4)

(*1) See contamination protection accessory on A1-494. (*2) See A1-71. (*3) See A1-82. (*4) See A1-13.

Note) This model number indicates that a single-rail unit constitutes one set. (i.e., required number of sets when 2 rails are used in parallel is 2 at a minimum.)

Download data by searching for the corresponding model number on the Technical Support site. https://tech.thk.com

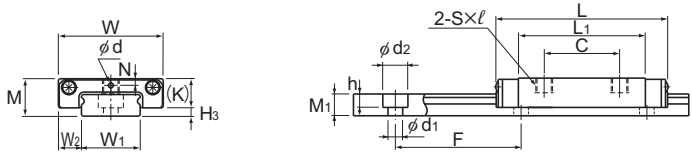

Models RSR2WN, RSR3WM/WN

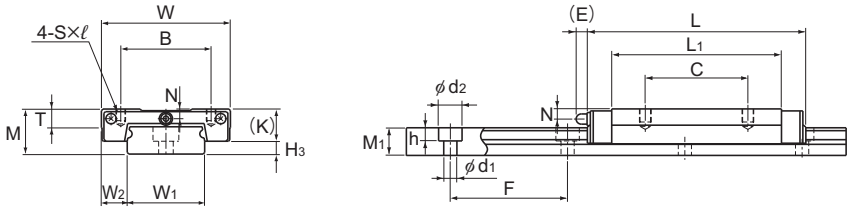

Model RSR14WVM

Unit: mm

	LM rail dimensions						Basic load rating		Static permissible moment N-m*					Mass	
	Width		Height	Pitch		Length*	C	C_0	M_A		M_B		M_C	LM block	LM rail
	W_1	W_2	M_1	F	$d_1 \times d_2 \times h$	Max	kN	kN	1 block	Double blocks	1 block	Double blocks	1 block	kg	kg/m
	2 0 4 −0.03	2 3	2 2.6	8 10	—*1 1.8×2.8×0.75	200	0.214 0.395	0.384 0.682	0.564 1.336	2.994 7.32	0.564 1.336	2.994 7.32	0.442 1.501	0.0008 0.0020	0.029 0.079
	3 0 −0.02	2.5	2.6	10	—*2	220	0.18 0.3	0.27 0.44	0.293 0.726	2.11 4.33	0.293 0.726	2.11 4.33	0.45 0.73	0.0011 0.0016	0.055
	6 0 −0.02	3	2.6	15	2.4×4×1.5	480	0.25 0.39	0.47 0.75	0.668 1.57	4.44 9.06	0.668 1.57	4.44 90.6	1.48 2.36	0.002 0.003	0.12
	30 0 −0.05	10	9	40	4.5×7.5×5.3	1800	6.01	9.08	43.2	233	38.2	208	110	0.096	2

Note) The maximum length under "Length*" indicates the standard maximum length of an LM rail. (See A1-254.)
Static permissible moment*: 1 block: static permissible moment value with 1 LM block
Double blocks: static permissible moment value with 2 blocks closely contacting with each other

- Recommended tightening torque when mounting the LM rail/block

Table1 shows recommended bolt tightening torques when mounting the LM block and LM rail of models RSR2 and RSR3.

Table1 Recommended Tightening Torques of Mounting Bolts

Model No.	Model No. of screw	Recommended tightening torque (N-m)		Remarks
		Block	Rail	Applicable bolt
RSR 2N	M1	0.09	0.03	Flathead machine screw designed for use with precision equipment
RSR 2WN	M1.6	0.28	0.138	
RSR 3M	M1.6	0.09	0.09	Austenite stainless steel hexagonal-socket-head type bolts
RSR 3N	M2	0.19	0.19	

Options⇒A1-457

Standard Length and Maximum Length of the LM Rail

Table2 shows the standard and maximum lengths of the RSR model rail.

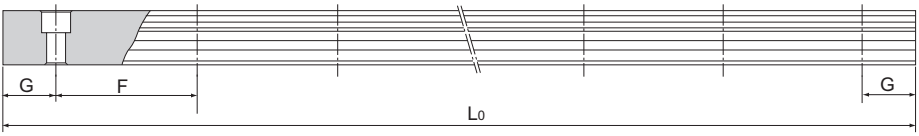

Table2 Standard Length and Maximum Length of the LM Rail for Model RSR/RSR-W

Unit: mm

Model No.	RSR2N	RSR2WN	RSR3	RSR3W	RSR14W
LM rail standard length (L_o)	32 40 56 80 104	40 60 70 80 100 180	30 40 60 80 100	40 55 70	110 150 190 230 270 310 430 550 670 790
Standard pitch F	8	10	10	15	40
G	4	5	5	5	15
Max length	200	200	220	480	1800

Note1) The maximum length varies with accuracy grades. Contact THK for details.
Note2) The LM rail mounting hole of model RSR3 is an M1.6 through hole.

Prevention of LM block from falling off of LM rail

In model RSR/RSR-W, the balls fall out if the LM block comes off the LM rail.
For this reason, LM Guide assemblies are delivered with a part which prevents the LM block from coming off the rail. If you remove this part when using the product, please take precautions to avoid overrunning the blocks off of the rail.

HR

LM Guide Separate Type (4-way Equal Load) Model HR

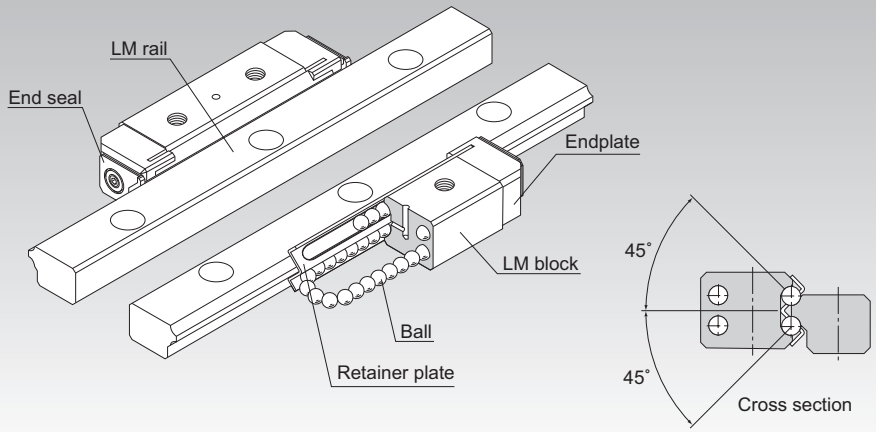

Point of Selection	**A1-10**
Point of Design	**A1-434**
Options	**A1-457**
Model No.	**A1-522**
Precautions on Use	**A1-528**
Accessories for Lubrication	**A24-1**
Mounting Procedure and Maintenance	**B1-89**
Equivalent moment factor	**A1-43**
Rated Loads in All Directions	**A1-58**
Equivalent factor in each direction	**A1-60**
Example of Clearance Adjustment	**A1-259**
Accuracy Standards	**A1-80**
Shoulder Height of the Mounting Base and the Corner Radius	**A1-448**
Permissible Error of the Mounting Surface	**A1-451**
Dimensions of Each Model with an Option Attached	**A1-470**

Structure and Features

Balls roll in two rows of raceways precision-ground on an LM rail and an LM block, and endplates incorporated in the LM block allow the balls to circulate. Since retainer plates hold the balls, they do not fall off.
Because of the angular contact structure where two rows of balls rolling on the LM rail each contact the raceway at 45°, the same load can be applied in all directions (radial, reverse radial and lateral directions) if a set of LM rails and LM block is mounted on the same plane (i.e., when two LM rails are combined with an LM block on the same plane). Furthermore, since the sectional height is low, a compact and stable linear guide mechanism is achieved.
This structure makes clearance adjustment relatively easy, and is highly capable of absorbing a mounting error.

[Easy Installation]
Model HR is easier to adjust a clearance and achieve more accuracy than cross-roller guides.

[Self-adjustment Capability]
Even if the parallelism or the level between the two rails is poorly established, the self-adjustment capability through front-to-front configuration of THK's unique circular-arc grooves (DF set) enables a mounting error to be absorbed and smooth straight motion to be achieved even under a preload.

[4-way Equal Load]
When the two rails are mounted in parallel, each row of balls is placed at a contact angle of 45° so that the rated loads applied to the LM block are uniform in the four directions (radial, reverse radial and lateral directions), enabling the LM Guide to be used in various orientations and in applications.

[Sectional Dimensions Approximate to Cross-roller Guides]
Since model HR utilizes endcaps for recirculation, cage/retainer creep cannot occur as with cross-roller guides. In addition, the sectional shape of model HR is approximate to that of cross-roller guides, therefore, its components are dimensionally interchangeable with that of cross-roller guides.

[Stainless Steel Type also Available]
A special type whose LM block, LM rail and balls are made of stainless steel is also available.

Types and Features

Model HR - Heavy-load Type

Specification Table⇒A1-262

The LM blocks can be mounted from the top and the bottom.

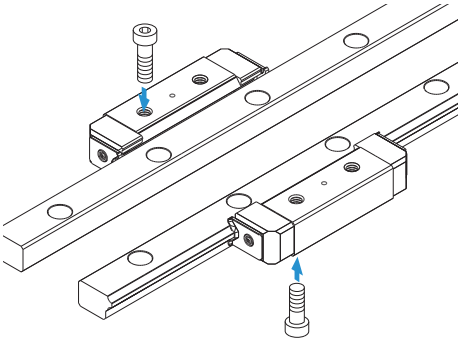

Model HR-T-Ultra-heavy Load Type

Specification Table⇒A1-262

Has the same cross-sectional shape as model HR, but has a greater overall LM block length (L) and a higher load rating.

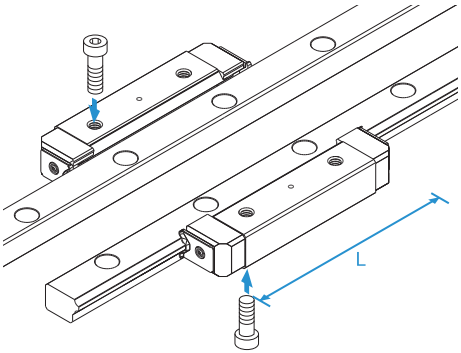

Example of Clearance Adjustment

Design the clearance adjustment bolt so that it presses the center of the side face of the LM block.

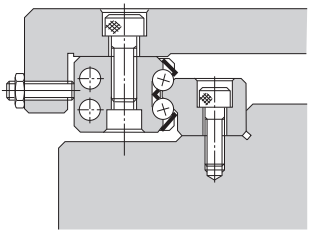

a. Using an adjustment screw
Normally, an adjustment screw is used to press the LM block.

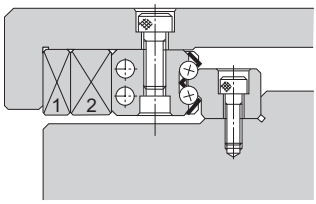

b. Using tapered gibs
When high accuracy and high rigidity are required, use tapered gibs 1) and 2).

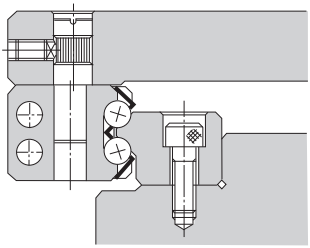

c. Using an eccentric pin
A type using an eccentric pin to adjust the clearance is also available.

Comparison of Model Numbers with Cross-roller Guides

Each type of LM Guide model HR has sectional dimensions approximate to that of the corresponding cross roller guide model.

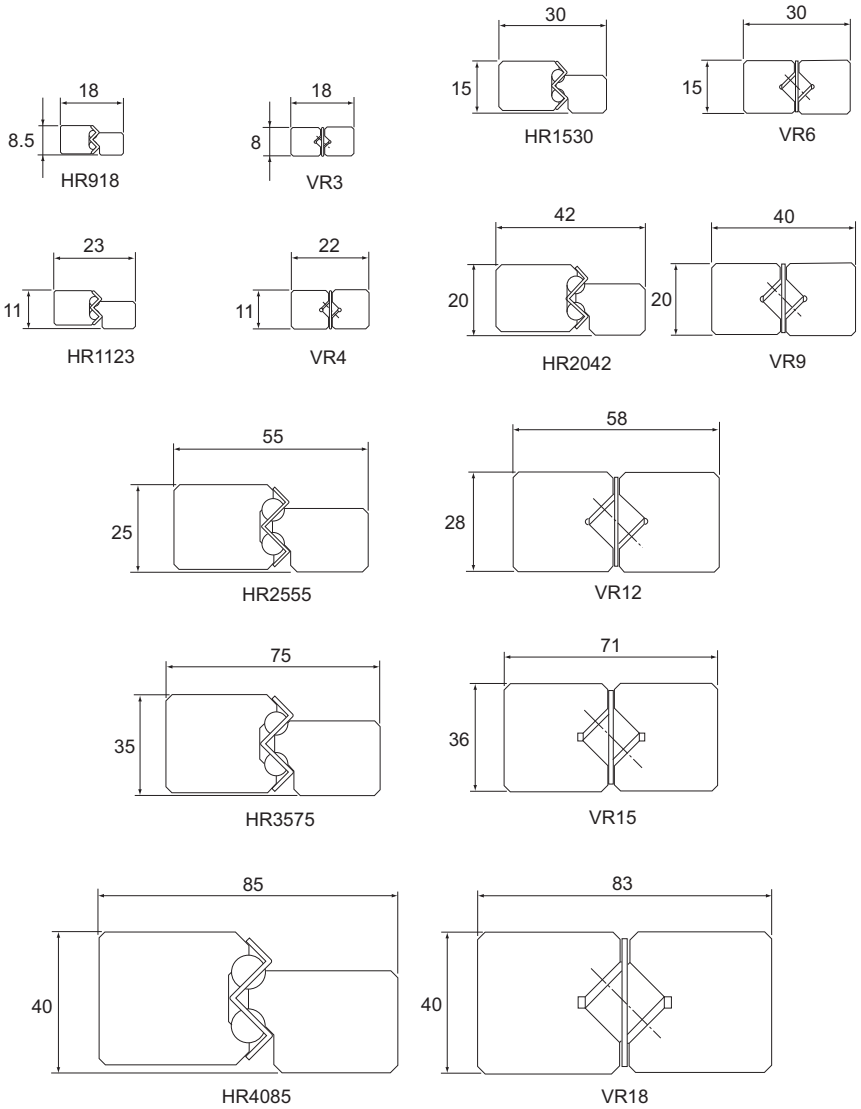

Fig.1

Models HR, HR-T, HR-M and HR-TM

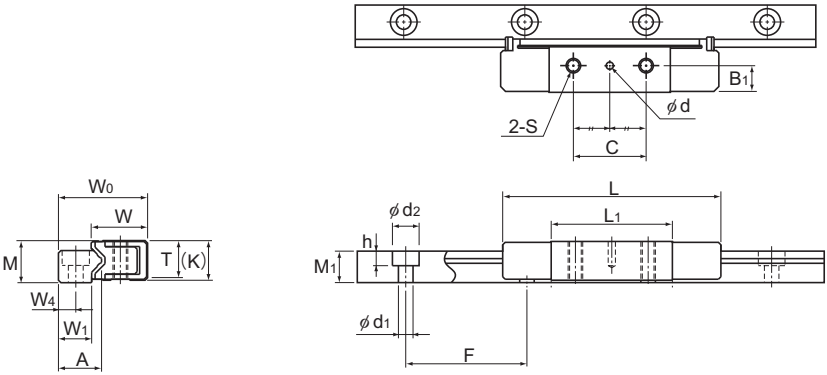

Models HR918 and 918M

Model No.	Outer dimensions				LM block dimensions									
	Height M	Width W	W_0	Length L	B_1	C	H	S	h_2	L_1	T	K	Greasing hole d	D_1
HR 918 HR 918M	8.5	11.4	18	45	5.5	15	—	M3	—	25	7.5	8	1.5	—
HR 1123 HR 1123M	11	13.7	23	52	7	15	2.55	M3	3	30	9.5	10	2	5
HR 1530 HR 1530M	15	19.2	30	69	10	20	3.3	M4	3.5	40	13	14	2	6.5
HR 2042 HR 2042M	20	26.3	42	91.6	13	35	5.3	M6	5.5	56.6	17.5	19	3	10
HR 2042T HR 2042TM	20	26.3	42	110.7	13	50	5.3	M6	5.5	75.7	17.5	19	3	10
HR 2555 HR 2555M	25	33.3	55	121	16	45	6.8	M8	7	80	22.5	24	3	11
HR 2555T HR 2555TM	25	33.3	55	146.4	16	72	6.8	M8	7	105.4	22.5	24	3	11

Note) Symbol M indicates that stainless steel is used in the LM block, LM rail and balls. Those models marked with this symbol are therefore highly resistant to corrosion and environment.

Model number coding

2 HR2555 UU M +1000L P T M

- 2: No. of LM blocks used on the same rail
- HR2555: Model number
- UU: Contamination protection accessory symbol (*1)
- M: Stainless steel LM block
- +1000L: LM rail length (in mm)
- P: Accuracy symbol (*2) Normal grade (No Symbol)/High accuracy grade (H) Precision grade (P)/Super precision grade (SP) Ultra precision grade (UP)
- T: Symbol for LM rail jointed use
- M: Stainless steel LM rail

(*1) See contamination protection accessory on A1-494. (*2) See A1-80.

Note) One set of model HR means a combination of two LM rails and an LM blocks used on the same plane.

Download data by searching for the corresponding model number on the Technical Support site. https://tech.thk.com

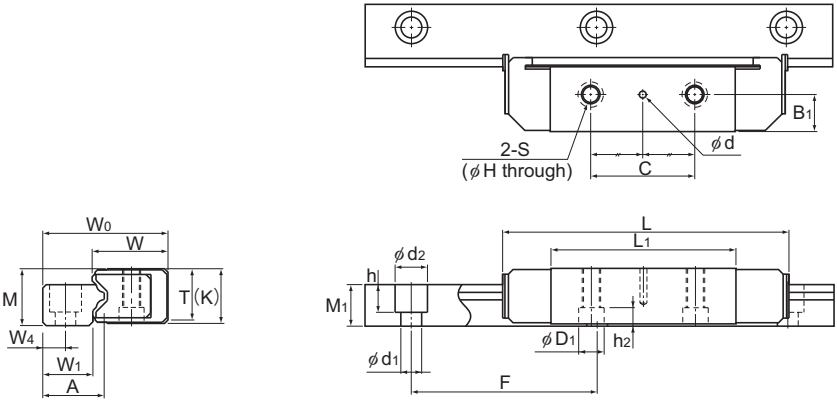

Models HR1123 to 2555M/T/TM

Unit: mm

	LM rail dimensions							Basic load rating		Static permissible moment kN-m*				Mass	
	Width			Height	Pitch		Length*	C	C_0	M_A		M_B		LM block	LM rail
	W_1	W_4	A	M_1	F	$d_1 \times d_2 \times h$	Max	kN	kN	1 block	Double blocks	1 block	Double blocks	kg	kg/m
	6.7	3.5	8.7	6.5	25	3×5.5×3	300 (300)	2.82	3.48	0.0261	0.194	0.0261	0.194	0.01	0.3
	9.5	5	11.6	8	40	3.5×6×4.5	500 (500)	4.09	4.93	0.0472	0.311	0.0472	0.311	0.03	0.5
	10.7	6	13.5	11	60	3.5×6×4.5	1600 (800)	7.56	8.77	0.112	0.733	0.112	0.733	0.08	1
	15.6	8	19.5	14.5	60	6×9.5×8.5	2200 (1000)	17	18.2	0.325	2.01	0.325	2.01	0.13	1.8
	15.6	8	19.5	14.5	60	6×9.5×8.5	2200 (1000)	20.8	24.3	0.56	3.16	0.56	3.16	0.26	1.8
	22	10	27	18	80	9×14×12	3000 (1000)	33.2	35.1	0.897	5.04	0.897	5.04	0.43	3.2
	22	10	27	18	80	9×14×12	3000 (1000)	40	45.9	1.49	7.8	1.49	7.8	0.5	3.2

Note) A moment in the direction M_C can be received if two rails are used in parallel. However, since it depends on the distance between the two rails, the moment in the direction M_C is omitted here.
The maximum length under "Length*" indicates the standard maximum length of an LM rail. (See A1-266.)
Static permissible moment*: 1 block: Static permissible moment value with one LM block mounted on two LM rails used on the same plane
Double blocks: Static permissible moment value with 2 blocks in close contact with each other on 2 LM blocks used on the same plane

Options⇒A1-457

Models HR, HR-T, HR-M and HR-TM

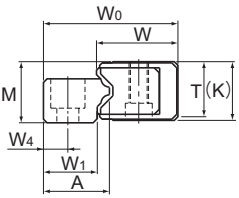

Model No.	Outer dimensions				LM block dimensions									
	Height M	Width W	W_0	Length L	B_1	C	H	S	h_2	L_1	T	K	Greasing hole d	D_1
HR 3065 HR 3065T	30	40.3	65	145 173.5	19	50 80	8.6	M10	9	90 118.5	27.5	29	4	14
HR 3575 HR 3575T	35	44.9	75	154.8 182.5	21.5	60 92.5	10.5	M12	12	103.8 131.5	32	34	4	18
HR 4085 HR 4085T	40	50.4	85	177.8 215.9	24	70 110	12.5	M14	13	120.8 158.9	36	38	4	20
HR 50105 HR 50105T	50	63.4	105	227 274.5	30	85 130	14.5	M16	15.5	150 197.5	45	48	5	23
HR 60125	60	74.4	125	329	35	160	18	M20	18	236	55	58	5	26

Model number coding

2 HR4085T UU +1500L P T

- 2: No. of LM blocks used on the same rail
- HR4085T: Model number
- UU: Contamination protection accessory symbol (*1)
- +1500L: LM rail length (in mm)
- P: Accuracy symbol (*2)
  Normal grade (No Symbol)/High accuracy grade (H)
  Precision grade (P)/Super precision grade (SP)
  Ultra precision grade (UP)
- T: Symbol for LM rail jointed use

(*1) See contamination protection accessory on A1-494. (*2) See A1-80.

Note) One set of model HR means a combination of two LM rails and an LM blocks used on the same plane.

Download data by searching for the corresponding model number on the Technical Support site. https://tech.thk.com

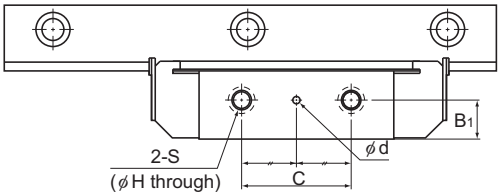

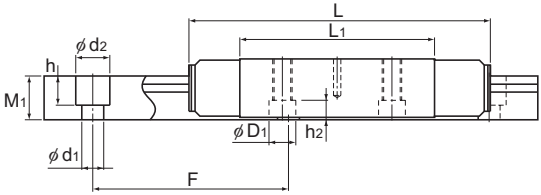

Unit: mm

	LM rail dimensions							Basic load rating		Static permissible moment kN-m*				Mass	
	Width			Height	Pitch		Length*	C	C_0	M_A		M_B		LM block	LM rail
	W_1	W_4	A	M_1	F	$d_1 \times d_2 \times h$	Max	kN	kN	1 block	Double blocks	1 block	Double blocks	kg	kg/m
	25	12	31.5	22.5	80	9×14×12	3000	42.6 51.5	44.4 58.1	1.27 2.12	7.71 11.7	1.27 2.12	7.71 11.7	0.7 0.9	4.6
	30.5	14.5	37	26	105	11×17.5×14	3000	53.5 64.4	54.8 71.7	1.75 2.91	10.1 15.2	1.75 2.91	10.1 15.2	1.05 1.4	6.4
	35	16	42.5	29	120	14×20×17	3000	78.8 95.1	78.9 103	3.02 5.02	16.6 25.7	3.02 5.02	16.6 25.7	1.53 1.7	8
	42	20	51.5	37	150	18×26×22	3000	127 153	123 161	5.89 9.81	33.1 51.3	5.89 9.81	33.1 51.3	3.06 3.5	12.1
	51	25	65	45	180	22×32×25	3000	226	232	16	89.5	16	89.5	7.5	19.3

Note) A moment in the direction M_C can be received if two rails are used in parallel. However, since it depends on the distance between the two rails, the moment in the direction M_C is omitted here.
The maximum length under "Length*" indicates the standard maximum length of an LM rail. (See A1-266.)
Static permissible moment*: 1 block: Static permissible moment value with one LM block mounted on two LM rails used on the same plane
Double blocks: Static permissible moment value with 2 blocks in close contact with each other on 2 LM blocks used on the same plane

Options⇒A1-457

Standard Length and Maximum Length of the LM Rail

Table1 shows the standard lengths and the maximum lengths of model HR variations. If the maximum length of the desired LM rail exceeds them, jointed rails will be used. Contact THK for details. For the G dimension when a special length is required, we recommend selecting the corresponding G value from the table. The longer the G dimension is the less stable the G area may become after installation, thus causing an adverse impact to accuracy.

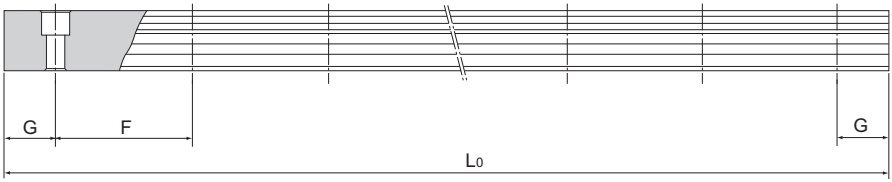

Table1 Standard Length and Maximum Length of the LM Rail for Model HR

Unit: mm

Model No.	HR 918	HR 1123	HR 1530	HR 2042	HR 2555	HR 3065	HR 3575	HR 4085	HR 50105	HR 60125
LM rail standard length (L_0)	70 120 220 295	110 230 310 390	160 280 340 460 580	220 280 340 460 640	280 440 600 760 1000 1240	280 440 600 760 1000 1240	570 885 1200 1620 2040 2460	780 1020 1260 1500 1980 2580	1270 1570 2020 2620	1530 1890 2250 2610
Standard pitch F	25	40	60	60	80	80	105	120	150	180
G	10	15	20	20	20	20	22.5	30	35	45
Max length	300 (300)	500 (500)	1600 (800)	2200 (1000)	3000 (1000)	3000	3000	3000	3000	3000

Note1) The maximum length varies with accuracy grades. Contact THK for details.
Note2) If jointed rails are not allowed and a greater length than the maximum values above is required, contact THK.
Note3) The figures in the parentheses indicate the maximum lengths of stainless steel made models.

Accessories

[Dedicated Mounting Bolt]

Normally, when mounting the LM block to adjust a clearance, use the tapped hole provided on the LM block to secure it as shown in Fig.2.

The holes of the bolt (d_1 and D_1) must be machined so that they are greater by the adjustment allowance.

If it is inevitable to use the mounting method as indicated by Fig.3 for a structural reason, the dedicated mounting bolt as shown in Fig.4 is required for securing the LM block. Be sure to specify that the dedicated mounting bolt is required when ordering the LM Guide.

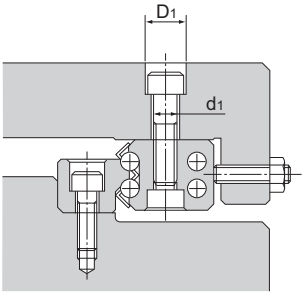

Fig.2

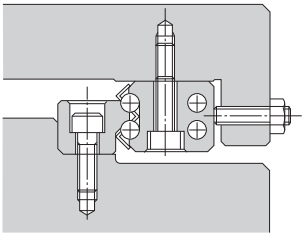

Fig.3

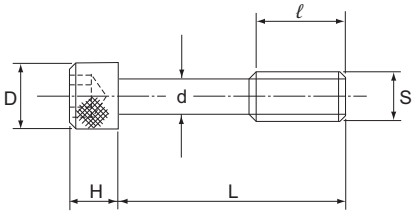

Fig.4

Table2 Dedicated Mounting Bolt Unit: mm

Model No.	S	d	D	H	L	ℓ	Supported model number
B 3	M3	2.4	5.5	3	17	5	HR 1530
B 5	M5	4.1	8.5	5	22	7	HR 2042
B 6	M6	4.9	10	6	28	9	HR 2555
B 8	M8	6.6	13	8	34	12	HR 3065
B 10	M10	8.3	16	10	39	15	HR 3575
B 12	M12	10.1	18	12	45	18	HR 4085
B 14	M14	11.8	21	14	55	21	HR 50105
B 16	M16	13.8	24	16	66	24	HR 60125

Greasing Hole

[Lubrication for Model HR]

The LM block has a greasing hole in the center of its top face. To provide lubrication through this hole, the table must be machined to also have a greasing hole as shown in Fig.5 and attach a grease nipple or the like. When using oil lubrication, it is necessary to identify the lubrication route. Contact THK for details.

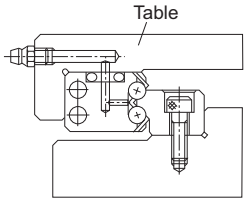

Fig.5 Example of Machining a Greasing Hole

GSR

LM Guide Separate Type (Radial) Model GSR

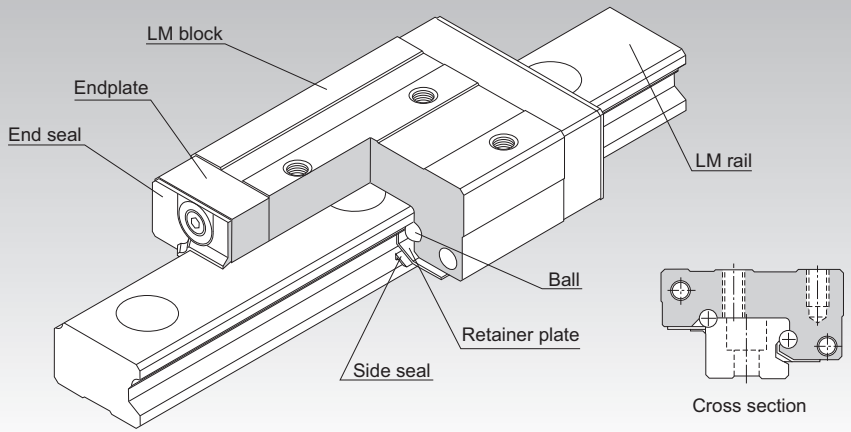

Point of Selection	**A1-10**
Point of Design	**A1-434**
Options	**A1-457**
Model No.	**A1-522**
Precautions on Use	**A1-528**
Accessories for Lubrication	**A24-1**
Mounting Procedure and Maintenance	**B1-89**

Equivalent moment factor	**A1-43**
Rated Loads in All Directions	**A1-58**
Equivalent factor in each direction	**A1-60**
Example of Clearance Adjustment	**A1-273**
Accuracy Standards	**A1-81**
Shoulder Height of the Mounting Base and the Corner Radius	**A1-448**
Permissible Error of the Mounting Surface	**A1-451**
Dimensions of Each Model with an Option Attached	**A1-470**

Structure and Features

Balls roll in two rows of raceways precision-ground on an LM rail and an LM block, and endplates incorporated in the LM block allow the balls to circulate. Since retainer plates hold the balls, they do not fall off.
As the top face of the LM block is inclined, a clearance is eliminated and an appropriate preload is applied simply by securing the LM block with mounting bolts.
Model GSR has a special contact structure using circular-arc grooves. This increases self-adjusting capability and makes GSR an optimal model for places associated with difficulty establishing high accuracy and for general industrial machinery.
* Model GSR cannot be used in single-axis applications.

[Interchangeability]
Both the LM block and LM rail are interchangeable and can be stored separately. Therefore, it is possible to store a long-size LM rail and cut it to a desired length before using it.

[Compact]
Since model GSR has a low center of gravity structure with a low overall height, the machine can be downsized.

[Capable of Receiving a Load in any Direction]
The ball contact angle is designed so that this model can receive a load in any direction. As a result, it can be used in places where a reverse radial load, lateral load or a moment in any direction is applied.

Types and Features

Model GSR-T

Specification Table⇒A1-274

This model is a standard type.

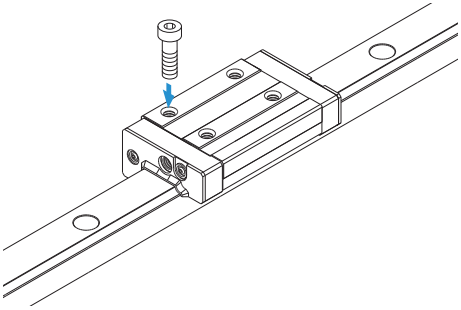

Model GSR-V

Specification Table⇒A1-274

A space-saving type that has the same cross-sectional shape as GSR-T, but has a shorter overall LM block length (L).

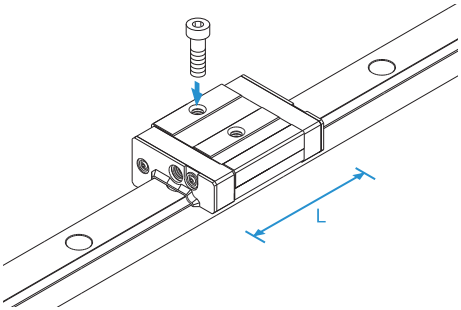

Example of Clearance Adjustment

By providing a shoulder maybe on the side face of each LM block and pressing either LM block with a bolt, a preload is applied and the rigidity is increased.

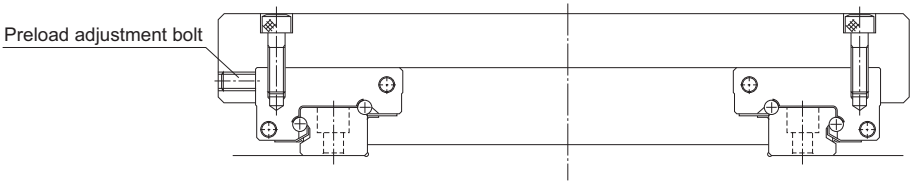

Fig.1 Example of Adjusting a Preload with a Push Bolt

Models GSR-T and GSR-V

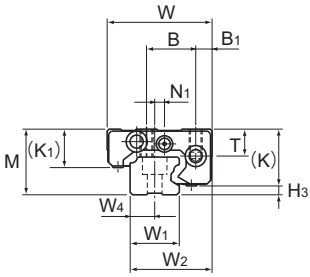

Model GSR15T/V

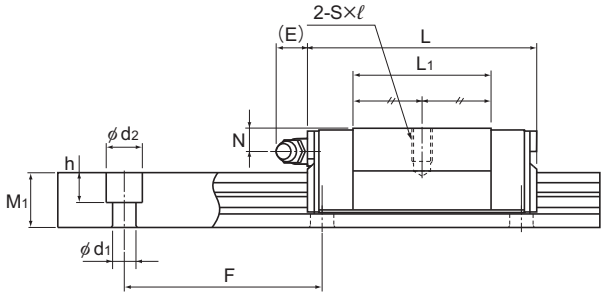

Models GSR15 to 25V

Model No.	Outer dimensions			LM block dimensions													
	Height M	Width W	Length L	B_1	B	C	S×ℓ	L_1	T	K	K_1	N	N_1	E	Grease nipple	H_3
GSR 15V GSR 15T	20	32	47.1 59.8	5	15	— 26	M4×7	27.5 40.2	8.25	16.8	12	4.5	3	5.5	PB107	3.2
GSR 20V GSR 20T	24	43	58.1 74	7	20	— 30	M5×8	34.3 50.2	9.7	20.6	13.6	5	—	12	B-M6F	3.4
GSR 25V GSR 25T	30	50	69 88	7	23	— 40	M6×10	41.2 60.2	12.7	25.4	16.8	7	—	12	B-M6F	4.6
GSR 30T	33	57	103	8	26	45	M8×12	70.3	14.6	28.5	18	7	—	12	B-M6F	4.5
GSR 35T	38	68	117	9	32	50	M8×15	80.3	15.6	32.5	20.5	8	—	12	B-M6F	5.5

Model number coding

Combination of LM rail and LM block

GSR25 T 2 UU +1060L H T K

- GSR25: Model number
- T: Type of LM block
- 2: No. of LM blocks used on the same rail
- UU: Contamination protection accessory symbol (*1)
- +1060L: LM rail length (in mm)
- H: Accuracy symbol (*2) Normal grade (No Symbol)/High accuracy grade (H) Precision grade (P)
- T: Symbol for LM rail jointed use
- K: Symbol for tapped-hole LM rail type

(*1) See contamination protection accessory on **A1-494**. (*2) See **A1-81**.

Note) One set of model GSR: This model number indicates that a single-rail unit constitutes one set.

Download data by searching for the corresponding model number on the Technical Support site. https://tech.thk.com

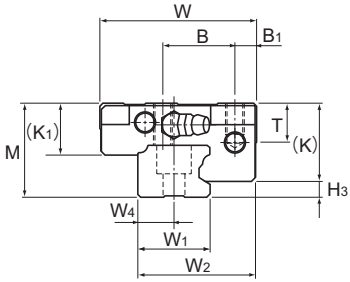

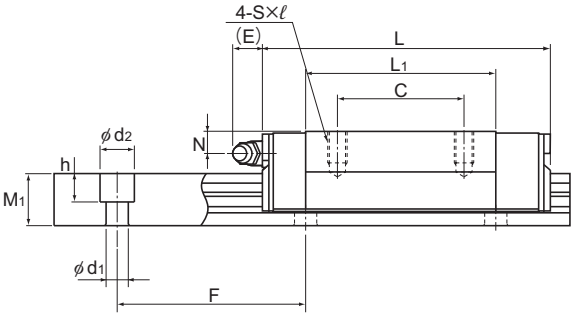

Models GSR20 to 35T, Models GSR20V and 25V

Models GSR15 to 35T

Unit: mm

	LM rail dimensions							Basic load rating		Static permissible moment kN-m*				Mass	
	Width			Height	Pitch		Length*	C	C_0	M_A		M_B		LM block	LM rail
	W_1	W_2	W_4	M_1	F	$d_1 \times d_2 \times h$	Max	kN	kN	1 block	Double blocks	1 block	Double blocks	kg	kg/m
	15	25	7.5	11.5	60	4.5×7.5×5.3	2000	6.51 8.42	6.77 9.77	0.0305 0.0606	0.19 0.337	0.0264 0.0523	0.165 0.29	0.08 0.13	1.2
	20	33	10	13	60	6×9.5×8.5	3000	10.5 13.6	10.6 15.3	0.06 0.118	0.368 0.652	0.052 0.102	0.318 0.562	0.17 0.25	1.8
	23	38	11.5	16.5	60	7×11×9	3000	15.5 20	15.2 22	0.102 0.205	0.625 1.11	0.0891 0.176	0.541 0.961	0.29 0.5	2.6
	28	44.5	14	19	80	9×14×12	3000	27.8	29.9	0.325	1.77	0.28	1.52	0.6	3.6
	34	54	17	22	80	11×17.5×14	3000	37	39.1	0.485	2.63	0.419	2.27	1	5

Note) A moment in the direction M_C can be received if two rails are used in parallel. However, since it depends on the distance between the two rails, the moment in the direction M_C is omitted here.
The maximum length under "Length*" indicates the standard maximum length of an LM rail. (See A1-276.)
Static permissible moment*: 1 block: static permissible moment value with 1 LM block
Double blocks: static permissible moment value with 2 blocks closely contacting with each other
Clients who require wall-mounted installations or oil lubrication should contact THK.

Model number coding

LM block

GSR25 T UU

- GSR25: Model number
- T: Type of LM block
- UU: Contamination protection accessory symbol (*1)

LM rail

GSR25 -1060L H K

- GSR25: Model number
- -1060L: LM rail length (in mm)
- H: Symbol for tapped-hole LM rail type
- K: Accuracy symbol (*2)
  Normal grade (No Symbol)
  High accuracy grade (H)
  Precision grade (P)

(*1) See contamination protection accessory on A1-494. (*2) See A1-81.

Options⇒A1-457

Standard Length and Maximum Length of the LM Rail

Table1 shows the standard lengths and the maximum lengths of model GSR variations.
In case the required quantity is large and the lengths are not the same, we recommend preparing an LM rail of the maximum length in stock. This is economical since it allows you to cut the rail to the desired length as necessary.

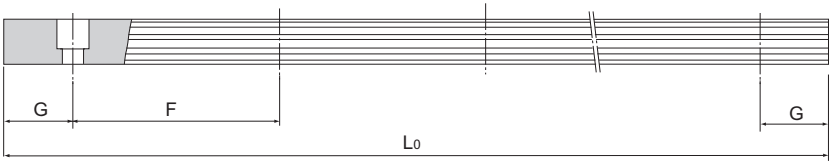

Table1 Standard Length and Maximum Length of the LM Rail for Model GSR

Unit: mm

Model No.	GSR 15	GSR 20	GSR 25	GSR 30	GSR 35
LM rail standard length (L_o)	460 820 1060 1600	460 820 1060 1600	460 820 1060 1600	1240 1720 2200 3000	1240 1720 2200 3000
Standard pitch F	60	60	60	80	80
G	20	20	20	20	20
Max length	2000	3000	3000	3000	3000

Note) The maximum length varies with accuracy grades. Contact THK for details.

Tapped-hole LM Rail Type of Model GSR

- Since the bottom of the LM rail has a tapped hole, this model can easily be installed on an H-shape steel and channel.
- Since the top face of the LM rail has no mounting hole, the sealabilitiy is increased and entrance of foreign material (e.g., cutting chips) can be prevented.

(1) Determine the bolt length so that a clearance of 2 to 3 mm is secured between the bolt end and the bottom of the tap (effective tap depth).
(2) As shown in Fig.2, a tapered washer is also available that allows GSR to be mounted on a section steel.
(3) For model number coding, see A1-274 to A1-275.

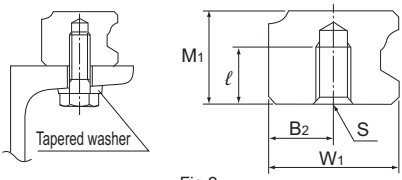

Fig.2

Table2 Tap Position and Depth Shape

Model No.	W_1	B_2	M_1	S×ℓ
GSR 15	15	7.5	11.5	M4×7
GSR 20	20	10	13	M5×8
GSR 25	23	11.5	16.5	M6×10
GSR 30	28	14	19	M8×12
GSR 35	34	17	22	M10×14

GSR-R

LM Guide Separate Type (Radial) Model GSR-R

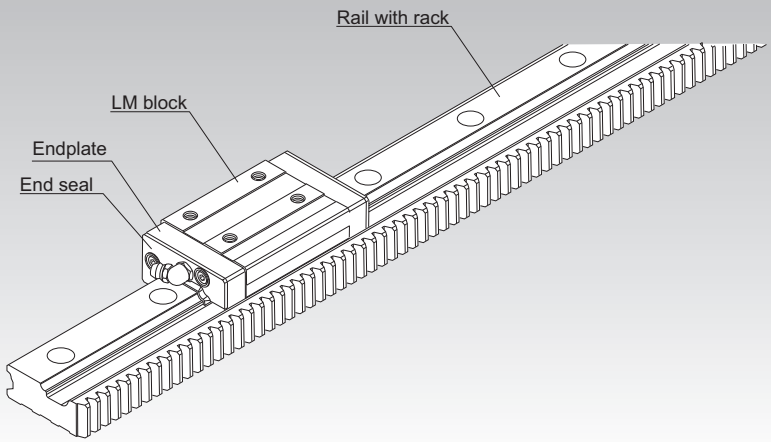

Point of Selection	**A1-10**
Point of Design	**A1-434**
Options	**A1-457**
Model No.	**A1-522**
Precautions on Use	**A1-528**
Accessories for Lubrication	**A24-1**
Mounting Procedure and Maintenance	**B1-89**
Equivalent moment factor	**A1-43**
Rated Loads in All Directions	**A1-58**
Equivalent factor in each direction	**A1-60**
Accuracy Standards	**A1-81**
Shoulder Height of the Mounting Base and the Corner Radius	**A1-448**
Permissible Error of the Mounting Surface	**A1-451**
Dimensions of Each Model with an Option Attached	**A1-470**

Structure and Features

Balls roll in two rows of raceways precision-ground on an LM rail and an LM block, and endplates incorporated in the LM block allow the balls to circulate. Since retainer plates hold the balls, they do not fall off.
As the top face of the LM block is inclined, a clearance is eliminated and an appropriate preload is applied simply by securing the LM block with mounting bolts.
Model GSR-R is based on model GSR, but has rack teeth on the LM rail. This facilitates the design and assembly of drive mechanisms.
* Model GSR-R cannot be used in single-axis applications.

[Reduced Machining and Assembly Costs]
The single-piece structure integrating the LM rail (linear guide) and rack (drive) reduces labor and time for machining the rack mounting surface and assembling and adjusting the guide system, thus to achieve significant cost reduction.

[Easy Designing]
The travel distance per turn of the pinion is specified by the integer value. This makes it easy to calculate the travel distance per pulse when the LM Guide is used in combination with a stepping motor or servomotor.

[Space Saving]
Since the rail has a rack, the machine size can be reduced.

[Long Stroke]
The end faces of the LM rail are machined for jointed use. To obtain a long stroke, simply joint LM rails of the standard length.

[High Durability]
The rack tooth has a width equal to the LM rail height, the rack uses high-grade steel with proven performance and the tooth surface are heat-treated, thereby to ensure high durability.

Types and Features

Model GSR-R (Rail with Rack)

Specification Table⇒A1-289

Since the thrust load on the pinion shaft can be kept low due to rack-pinion meshing, it is easy to design systems with pinion shaft bearings and tables that are not so rigid.

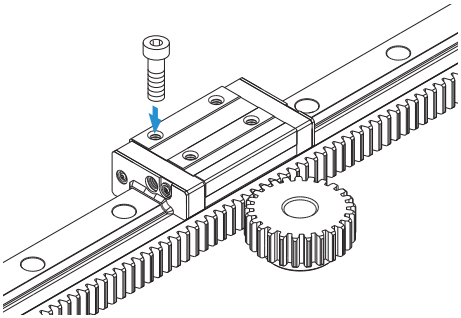

Model GSR-R

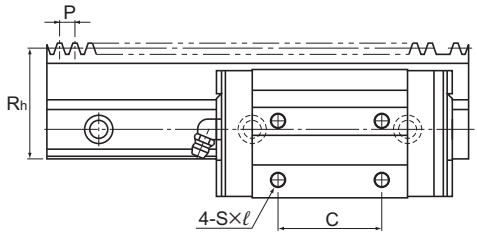

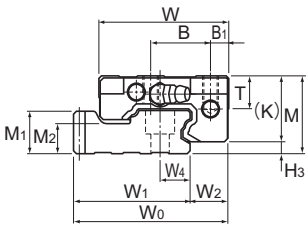

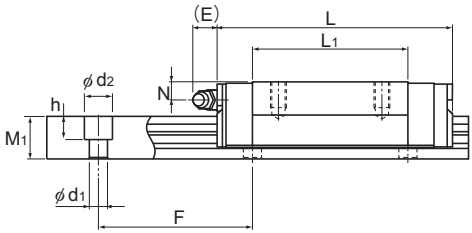

Model GSR-T-R

Model No.	Rack			Outer dimensions				LM block dimensions										
	Reference pitch dimension P	Module	Pitch line height Rh	Height M	Width W	W_0	Length L	B_1	B	C	S×ℓ	L_1	T	K	N	E	Grease nipple	H_3
GSR 25V-R GSR 25T-R	6	1.91	43	30	50	59.91	69 88	7	23	— 40	M6×10	41.2 60.2	12.7	25.4	7	12	B-M6F	4.6
GSR 30T-R	8	2.55	48	33	57	67.05	103	8	26	45	M8×12	70.3	14.6	28.5	7	12	B-M6F	4.5
GSR 35T-R	10	3.18	57	38	68	80.18	117	9	32	50	M8×15	80.3	15.6	32.5	8	12	B-M6F	5.5

Note) A special type with a module pitch is also available. Contact THK for details.
For checking the pinion strength, see A1-286.

Model number coding

Single-rail LM Guide

GSR25T 2 UU +5000L H R T

- GSR25T: Model number
- 2: No. of LM blocks
- UU: Contamination protection accessory symbol (*1)
- +5000L: LM rail length (in mm)
- H: Accuracy symbol (*2) Normal grade (No Symbol)/High accuracy grade (H)
- R: Symbol for rail with rack type R: Symbol for rail with rack type
- T: Symbol for LM rail jointed use

(*1) See contamination protection accessory on A1-494. (*2) See A1-81.

Note) This model number indicates that a single-rail unit constitutes one set.

Download data by searching for the corresponding model number on the Technical Support site. https://tech.thk.com

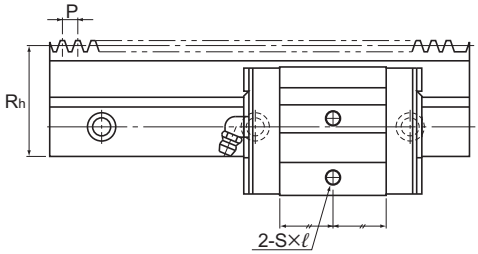

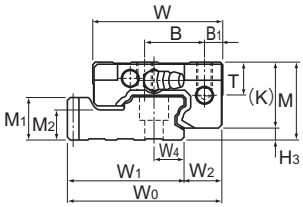

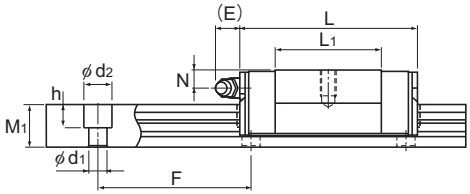

Model GSR25V-R

Unit: mm

	LM rail dimensions							Basic load rating		Static permissible moment kN-m*				Mass	
	Width			Height	Pitch			C	C_0	M_A		M_B		LM block	LM rail
	W_1	W_2	W_4	M_1	F	M_2	$d_1 \times d_2 \times h$	kN	kN	1 block	Double blocks	1 block	Double blocks	kg	kg/m
	44.91	15	11.5	16.5	60	11.5	7×11×9	15.5 20	15.2 22	0.102 0.205	0.625 1.11	0.0891 0.176	0.541 0.961	0.29 0.5	4.7
	50.55	16.5	14	19	80	12	9×14×12	27.8	29.9	0.325	1.77	0.28	1.52	0.6	5.9
	60.18	20	17	22	80	14.5	11×17.5×14	37	39.1	0.485	2.63	0.419	2.27	1	8.1

Note) A moment in the direction M_C can be received if two rails are used in parallel. However, since it depends on the distance between the two rails, the moment in the direction M_C is omitted here.
The maximum length under "Length*" indicates the standard maximum length of an LM rail. (See A1-284.)
Static permissible moment*: 1 block: static permissible moment value with 1 LM block
Double blocks: static permissible moment value with 2 blocks closely contacting with each other
Clients who require wall-mounted installations or oil lubrication should contact THK.

Model number coding

LM block

GSR25T UU

Model number

Contamination protection accessory symbol (*1)

Rail with rack

GSR25-2004L H R

R: Symbol for rail with rack type

Accuracy symbol (*2)
Normal grade (No Symbol)
High accuracy grade (H)

(*1) See contamination protection accessory on A1-494. (*2) See A1-81.

Options⇒A1-457

Standard Length of the LM Rail

Table1 shows the standard LM rail lengths of model GSR-R variations.

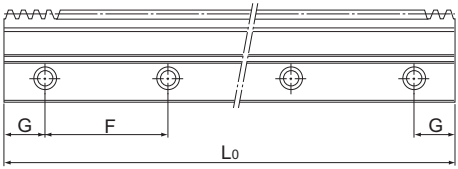

Table1 Standard Length of the LM Rail for Model GSR-R

Unit: mm

Model No.	GSR 25-R		GSR 30-R		GSR 35-R	
LM rail Standard length (L_0)	1500	2004	1504	2000	1500	2000
Standard pitch F	60	60	80	80	80	80
G	30	42	32	40	30	40

Rack and Pinion

[Joining Two or More Rails]

The end faces of the rail with rack are machined so that a clearance is left after assembly in order to facilitate the assembly.
Use of a special jig as shown in Fig.1 will make the connection easier.
(THK also offers the rack-aligning jig.)

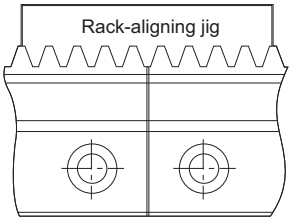

Fig.1 Rack Connection Method

[Reworking the Pinion Hole]

Only the teeth of the reworkable pinion-hole-diameter type (type C) are heat-treated. The hole and keyway can therefore be reworked by the user to the desired diameter and shape.
When reworking the pinion hole, be sure to take the following into account.
The material of the reworkable hole diameter type (type C): S45C

(1) When chucking the teeth of a reworkable hole diameter type, use a jaw scroll chuck or something like it to maintain the tooth profile.
(2) The pinion is produced using the center of the hole as a reference point. The center of the hole should therefore be used as a reference point when the pinion is aligned.
When checking the pinion runout, refer to the boss sides.
(3) Keep the reworked hole diameter within roughly 60 to 70% of the boss diameter.

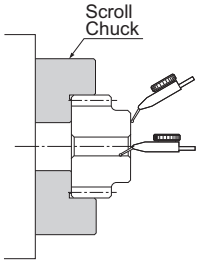

Fig.2

[Lubricating the Rack and Pinion]

To ensure smooth sliding on tooth surfaces and prevent wear, the teeth should be provided with a lubricant.

Note1) Use a lubricant of the same type of thickener as that contained in the LM Guide.
Note2) Unpredictable wear may occur in the rack and pinion according to load conditions and lubrication status. Contact THK when undertaking design.

[Checking Strength]

The strength of the assembled rack and pinion must be checked in advance.

(1) Calculate the maximum thrust acting on the pinion.

(2) Divide the permissible power transmission capacity of the pinion to be used (Table1) by an overload factor (Table2).

(3) By comparing the thrust acting on the pinion obtained in step 1 with the pinion power transmission capacity obtained in step 2, make sure the applied thrust does not exceed the permissible power transmission capacity.

[Example of calculation]

Model GSR-R is used in a horizontal conveyance system receiving a medium impact (assuming external load to be zero).

● Conditions

Subject model No. (pinion)	GP6-20A
Mass (table + work)	m=100kg
Speed	v=1 m/s
Acceleration/deceleration time	T_1 =0.1 s

● Consideration

(1) Calculating the maximum thrust

Calculated the thrust during acceleration/deceleration.

$$\mathbf{Fmax} = \mathbf{m} \cdot \frac{\mathbf{v}}{\mathbf{T_1}} = \mathbf{1.00kN}$$

(2) Permissible power transmission capacity of the pinion

$$\mathbf{Pmax} = \frac{\text{Permissible power transmission capacity (see Table 1)}}{\text{Overload factor (see Table 2)}} = \frac{\mathbf{2.33}}{\mathbf{1.25}}$$

$$= \mathbf{1.86kN}$$

(3) Comparison between the maximum thrust and the permissible power transmission capacity of the pinion

Fmax<Pmax

Therefore, it is judged that the subject model number can be used.

Table1 Permissible Power transmission Capacity

Unit: kN

Model No.	Permissible Power transmission Capacity	Supported model
GP 6-20A	2.33	GSR 25-R
GP 6-20C	2.05	
GP 6-25A	2.73	
GP 6-25C	2.23	
GP 8-20A	3.58	GSR 30-R
GP 8-20C	3.15	
GP 8-25A	4.19	
GP 8-25C	3.42	
GP10-20A	5.19	GSR 35-R
GP10-20C	4.57	
GP10-25A	6.06	
GP10-25C	4.96	

Table2 Overload Factor

Impact from the prime mover	Impact from the driven machine		
	Uniform load	Medium impact	Large impact
Uniform load (electric motor, turbine, hydraulic motor, etc.)	1.0	1.25	1.75

(Excerpt from JGMA401-01)

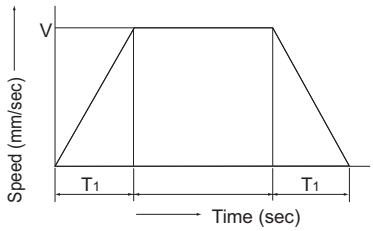

Fig.3

[Example of Assembling Model GSR-R with the Table]

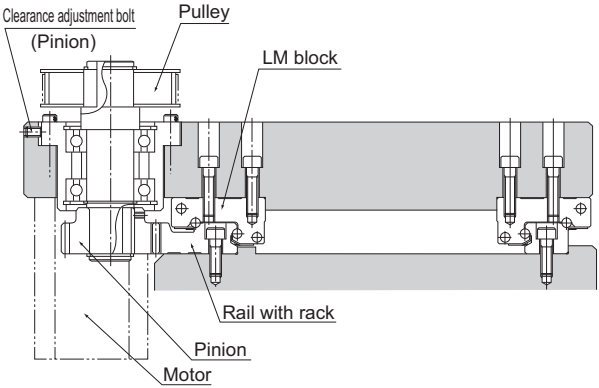

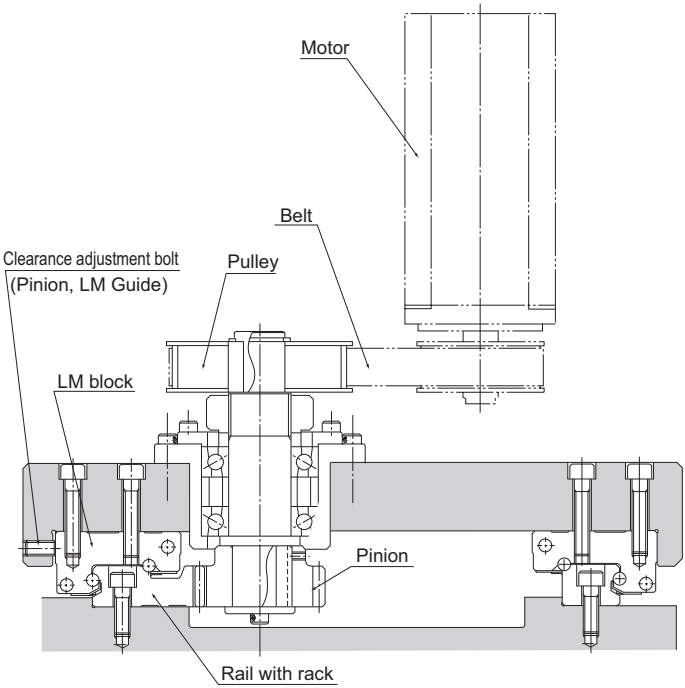

Rack and Pinion Dimensional Drawing

[Pinion for rack - type A]

The keyway worked type

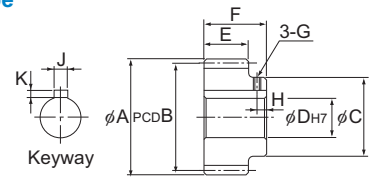

Unit: mm

Model No.	Pitch	Number of teeth	Tip circle diameter A	Meshing PCD B	Boss diameter C	Hole diameter D	Tooth width E	Overall length F	G	H	Keyway J×K	Supported model numbers
GP6-20A	6	20	42.9	39	30	18	16.5	24.5	M3	4	6×2.8	GSR 25-R
GP6-25A		25	51.9	48	35	18						
GP8-20A	8	20	57.1	52	40	20	19	26	M3	5	8×3.3	GSR 30-R
GP8-25A		25	69.1	64	40	20			M4			
GP10-20A	10	20	70.4	64	45	25	22	30	M4	5	8×3.3	GSR 35-R
GP10-25A		25	86.4	80	60	25					10×3.3	

Note1) When placing an order, specify the model number from the table.
Note2) Non-standard pinions with different numbers of teeth are also available upon request. Contact THK for details.

[Pinion for rack - type C]

The reworkable hole diameter type

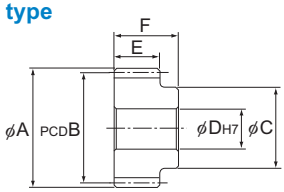

Unit: mm

Model No.	Pitch	Number of teeth	Tip circle diameter A	Meshing PCD B	Boss diameter C	Hole diameter D	Tooth width E	Overall length F	Supported model numbers
GP 6-20C	6	20	42.9	39	30	12	16.5	24.5	GSR 25-R
GP 6-25C		25	51.9	48	35	15			
GP 8-20C	8	20	57.1	52	40	18	19	26	GSR 30-R
GP 8-25C		25	69.1	64	40	18			
GP10-20C	10	20	70.4	64	45	18	22	30	GSR 35-R
GP10-25C		25	86.4	80	60	18			

Note1) When placing an order, specify the model number from the table.
Note2) Non-standard pinions with different numbers of teeth are also available upon request. Contact THK for details.

[The dimension when the LM rail is used in combination with a pinion]

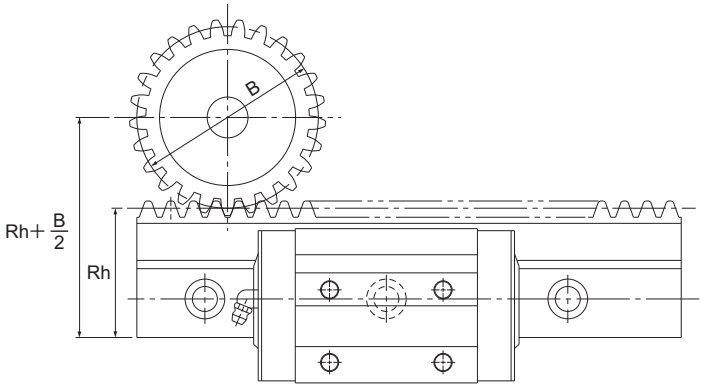

Unit: mm

Model GSR Model No.	Pinion Model No.	LM rail Pitch line height Rh	Pinion Meshing PCD B	Rh+B/2
GSR 25-R	GP 6-20A	43	39	62.5
	GP 6-20C			
	GP 6-25A		48	67
	GP 6-25C			
GSR 30-R	GP 8-20A	48	52	74
	GP 8-20C			
	GP 8-25A		64	80
	GP 8-25C			
GSR 35-R	GP 10-20A	57	64	89
	GP 10-20C			
	GP 10-25A		80	97
	GP 10-25C			

CSR

LM Guide Cross LM Guide Model CSR

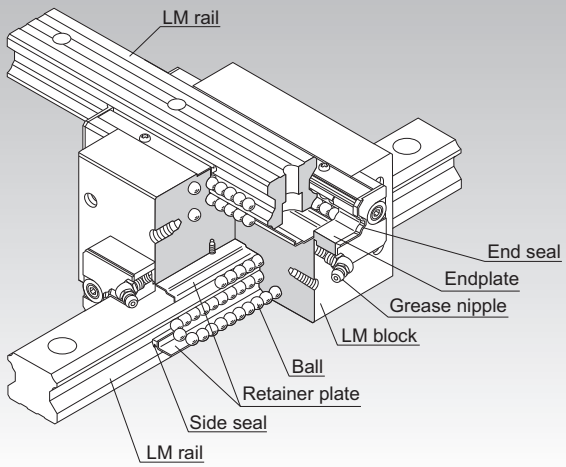

Point of Selection A1-10

Point of Design A1-434

Options A1-457

Model No. A1-522

Precautions on Use A1-528

Accessories for Lubrication A24-1

Mounting Procedure and Maintenance B1-89

Equivalent moment factor A1-43

Rated Loads in All Directions A1-58

Equivalent factor in each direction A1-60

Radial Clearance A1-71

Accuracy Standards A1-79

Shoulder Height of the Mounting Base and the Corner Radius A1-443

Permissible Error of the Mounting Surface A1-450

Dimensions of Each Model with an Option Attached A1-470

Structure and Features

Balls roll in four rows of raceways precision-ground on a LM rail and a LM block, and endplates incorporated in the LM block allow the balls to circulate. Since retainer plates hold the balls, they do not fall off even if the LM rail is pulled out.
This model is an integral type of LM Guide that squares an internal structure similar to model HSR, which has a proven track record and is highly reliable, with another and uses two LM rails in combination. It is machined with high precision so that the perpendicularity of the hexahedron of the LM block is within 2 μm per 100 mm in error. The two rails are also machined with high precision in relative straightness. As a result, extremely high accuracy in orthogonality is achieved. Since an orthogonal LM system can be achieved with model CSR alone, a conventionally required saddle is no longer necessary, the structure for X-Y motion can be simplified and the whole system can be downsized.

[4-way Equal Load]

Each row of balls is placed at a contact angle of 45° so that the rated loads applied to the LM block are uniform in the four directions (radial, reverse radial and lateral directions), enabling the LM Guide to be used in all orientations.

[High Rigidity]

Since balls are arranged in four rows in a well-balanced manner, this model is stiff against a moment, and smooth straight motion is ensured even a preload is applied to increase the rigidity.
The rigidity of the LM blocks is 50% higher than that of a combination of two HSR LM blocks secured together back-to-back with bolts. Thus, CSR is an optimal LM Guide for building an X-Y table that requires high rigidity.

Types and Features

Model CSR-S

Specification Table⇒A1-294

This model is a standard type.

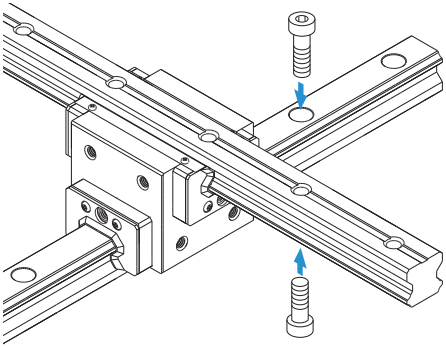

Model CSR

Specification Table⇒A1-294

It has a longer overall LM block length (L) and a greater rated load.

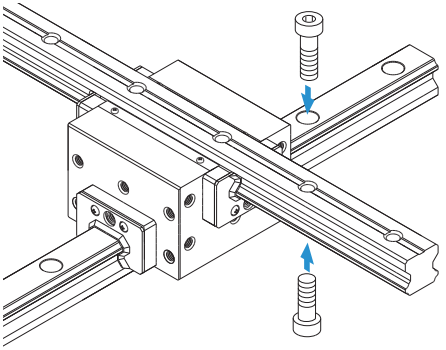

Drawing of Using an Inner Saddle

Model CSR can easily be assembled and adjusted by using an inner saddle to link four LM blocks together. When installed on an inner saddle, model CSR achieves a highly accurate X-Y guide and high rigidity moment in the yawing direction (as indicated by the arrow in the figure).

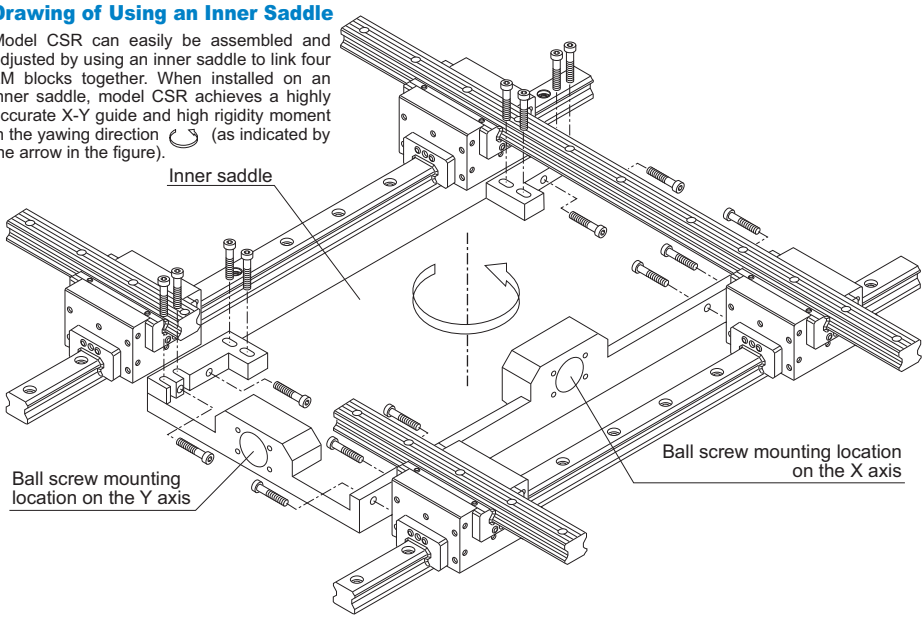

Model CSR

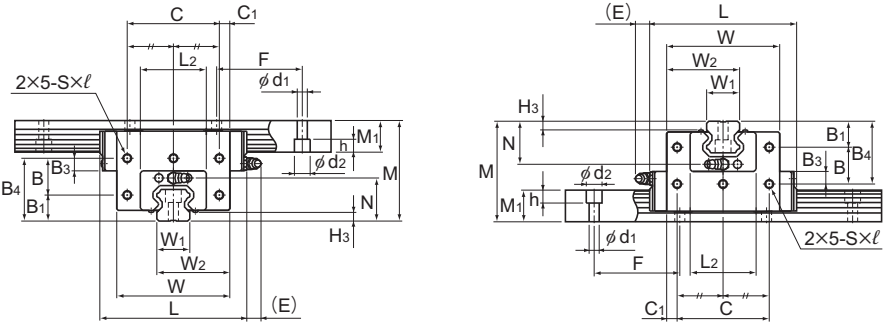

Models CSR20 to 45

Model No.	Outer dimensions			LM block dimensions													
	Height M	Width W	Length L	B_1	B_3	B_4	B	C	C_1	S×ℓ	L_2	H_3	N	E	Grease nipple	H_3
CSR 15	47	38.8	56.6	—	11.3	34.8	—	20	9.4	M4×6	32	3.5	19.5	5.5	PB1021B	3.5
CSR 20S CSR 20	57	50.8 66.8	74 90	— 13	13.3 7.8	42.5 37	— 24	30 56	10.4 5.4	M5×8	42	4	25	12	B-M6F	4
CSR 25S CSR 25	70	59.5 78.6	83.1 102.2	— 18	17 9	52 44	— 26	34 64	12.75 7.3	M6×10	46	5.5	30	12	B-M6F	5.5
CSR 30S CSR 30	82	70.4 93	98 120.6	— 21	20 12	61 53	— 32	40 76	15.2 8.5	M6×10	58	7	35	12	B-M6F	7
CSR 35	95	105.8	134.8	24	14	61	37	90	7.9	M8×14	68	7.5	40	12	B-M6F	7.5
CSR 45	118	129.8	170.8	30	16	75	45	110	9.9	M10×15	84	10	50	16	B-PT1/8	10

Model number coding

4 CSR25 UU C0 +1200/1000L P

- 4: Total No. of LM blocks
- CSR25: Model number
- UU: Contamination protection accessory symbol (*1)
- C0: Radial clearance symbol (*2) Normal (No symbol)/Light preload (C1) Medium preload (C0)
- +1200: LM rail length on the X axis (in mm)
- 1000L: LM rail length on the Y axis (in mm)
- P: Accuracy symbol (*3) Precision grade (P)/Super precision grade (SP) Ultra precision grade (UP)

(*1) See contamination protection accessory on A1-494. (*2) See A1-71. (*3) See A1-79.

Download data by searching for the corresponding model number on the Technical Support site. https://tech.thk.com

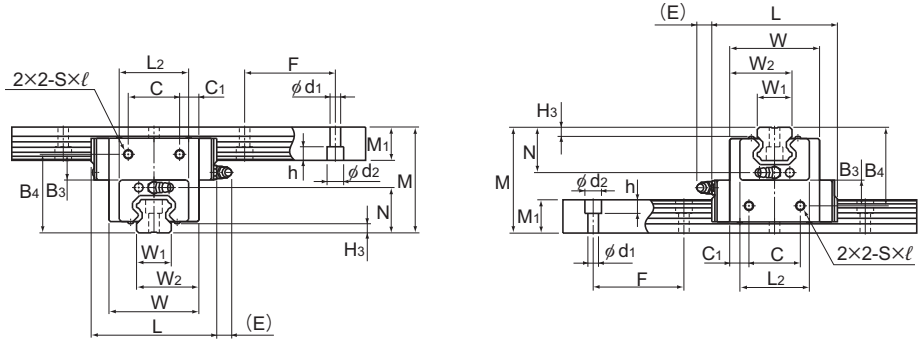

Models CSR15, 20S to 30S

Unit: mm

	LM rail dimensions						Basic load rating		Static permissible moment*		Mass	
	Width W_1 ±0.05	W_2	Height M_1	Pitch F	$d_1 \times d_2 \times h$	Length* Max	C kN	C_0 kN	M_0 kN-m	M_B kN-m	LM block kg	LM rail kg/m
	15	26.9	15	60	4.5×7.5×5.3	3000	10.9	15.7	0.0998	0.0945	0.34	1.5
	20	35.4 43.4	18	60	6×9.5×8.5	3000	19.8 23.9	27.4 35.8	0.235 0.307	0.218 0.363	0.73 1.3	2.3
	23	41.25 50.8	22	60	7×11×9	3000	27.6 35.2	36.4 51.6	0.366 0.518	0.324 0.627	1.2 2.2	3.3
	28	49.2 60.5	26	80	9×14×12	3000	40.5 48.9	53.7 70.2	0.652 0.852	0.599 0.995	2 3.6	4.8
	34	69.9	29	80	9×14×12	3000	65	91.7	1.37	1.49	5.3	6.6
	45	87.4	38	105	14×20×17	3090	100	135	2.6	2.59	9.8	11

Note) The maximum length under "Length*" indicates the standard maximum length of an LM rail. (See A1-296.)
Static permissible moment*: Static permissible moment value with 1 LM block

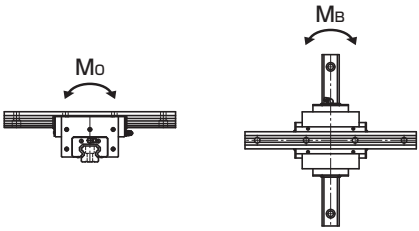

Options⇒A1-457

Standard Length and Maximum Length of the LM Rail

Table1 shows the standard lengths and the maximum lengths of model CSR variations.
For the G dimension when a special length is required, we recommend selecting the corresponding G value from the table. The longer the G dimension is, the less stable the G area may become after installation, thus causing an adverse impact to accuracy.

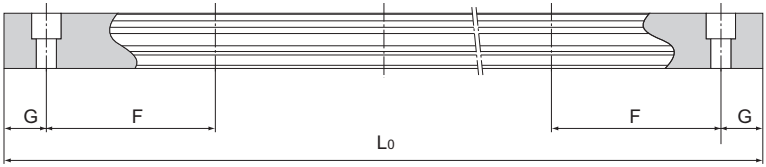

Table1 Standard Length and Maximum Length of the LM Rail for Model CSR

Unit: mm

Model No.	CSR 15	CSR 20	CSR 25	CSR 30	CSR 35	CSR 45
LM rail standard length (L_0)	160 220 280 340 400 460 520 580 640 700 760 820 940 1000 1060 1120 1180 1240 1360 1480 1600	220 280 340 400 460 520 580 640 700 760 820 940 1000 1060 1120 1180 1240 1360 1480 1600 1720 1840 1960 2080 2200	220 280 340 400 460 520 580 640 700 760 820 940 1000 1060 1120 1180 1240 1300 1360 1420 1480 1540 1600 1720 1840 1960 2080 2200 2320 2440	280 360 440 520 600 680 760 840 920 1000 1080 1160 1240 1320 1400 1480 1560 1640 1720 1800 1880 1960 2040 2200 2360 2520 2680 2840 3000	280 360 440 520 600 680 760 840 920 1000 1080 1160 1240 1320 1400 1480 1560 1640 1720 1800 1880 1960 2040 2200 2360 2520 2680 2840 3000	570 675 780 885 990 1095 1200 1305 1410 1515 1620 1725 1830 1935 2040 2145 2250 2355 2460 2565 2670 2775 2880 2985 3090
Standard pitch F	60	60	60	80	80	105
G	20	20	20	20	20	22.5
Max length	3000	3000	3000	3000	3000	3090

Note) The maximum length varies with accuracy grades. Contact THK for details.

Tapped-hole LM Rail Type of Model CSR

The model CSR variations include a type with its LM rail bottom tapped. With the X-axis LM rail having tapped holes, this model can be secured with bolts from the top.

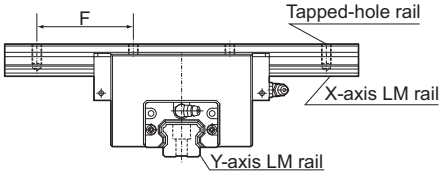

Table2 Dimensions of the LM Rail Tap Unit: mm

Model No.	S_1	Effective tap depth ℓ_1
15	M5	8
20	M6	10
25	M6	12
30	M8	15
35	M8	17
45	M12	24

Model number coding

4 CSR25 UU C0 +1200L P K/1000L P

Symbol for tapped-hole LM rail type

MX

LM Guide Miniature Cross Guide Model MX

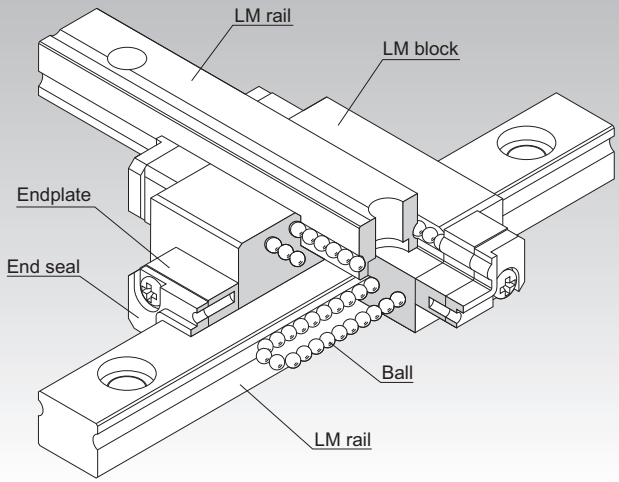

Point of Selection	**A1-10**
Point of Design	**A1-434**
Options	**A1-457**
Model No.	**A1-522**
Precautions on Use	**A1-528**
Accessories for Lubrication	**A24-1**
Mounting Procedure and Maintenance	**B1-89**
Equivalent moment factor	**A1-43**
Rated Loads in All Directions	**A1-58**
Equivalent factor in each direction	**A1-60**
Radial Clearance	**A1-71**
Accuracy Standards	**A1-83**
Shoulder Height of the Mounting Base and the Corner Radius	**A1-444**
Dimensions of Each Model with an Option Attached	**A1-470**

Structure and Features

Balls roll in two rows of raceways precision-ground on an LM rail and an LM block, and endplates incorporated in the LM block allow the balls to circulate. This model is an integral type of LM Guide that squares a unit of miniature LM Guide model RSR with another and uses two LM rails in combination. Since an orthogonal LM system with an extremely low height can be achieved with model MX alone, a conventionally required saddle is no longer necessary and the whole system can be downsized.

[4-way Equal Load]
Each row of balls is placed at a contact angle of 45° so that the rated loads applied to the LM block are uniform in the four directions (radial, reverse radial and lateral directions), enabling the LM Guide to be used in all orientations.

[Tapped-hole LM Rail Type]
There are two types of the LM rail: one designed to be mounted from the top with bolts, and a semi-standard type whose bottom face has tapped holes, allowing the rail to be mounted from the bottom.

Types and Features

Model MX

Specification Table⇒A1-300

MX is divided into two types: RSR5 cross type and RSR7W cross type.

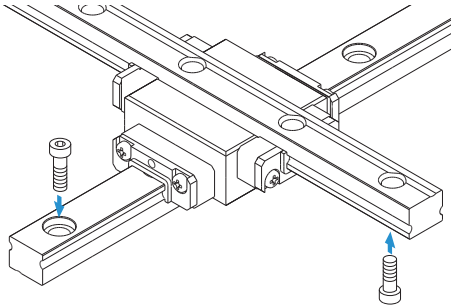

Model MX

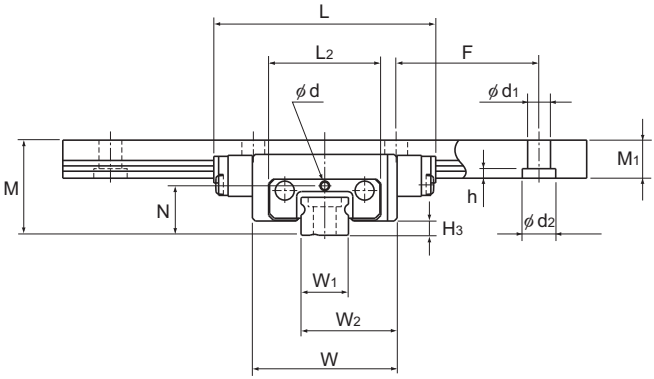

Model No.	Outer dimensions			LM block dimensions			
	Height M	Width W	Length L	L_2	N	Greasing hole d	H_3
MX 5M	10	15.2	23.3	11.8	5.2	0.8	1.5
MX 7WM	14.5	30.2	40.8	24.6	7.4	1.2	2

Note) The LM block, rail, and ball material are composed of stainless steel and are corrosion resistant to general environments.
The balls will fall out of the LM block if it is removed from the LM rail.

Model number coding

4 MX7W M UU C1 +120 / 100L P T M

- 4: Total No. of LM blocks
- MX7W M: Model number
- UU: Contamination protection accessory symbol (*1)
- C1: Radial clearance symbol (*2) Normal (No symbol) Light preload (C1)
- +120: LM rail length on the X axis (in mm)
- 100L: LM rail length on the Y axis (in mm)
- P: Accuracy symbol (*3) Normal grade (No Symbol)/Precision grade (P)
- T: Symbol for LM rail jointed use
- M: LM rail is made of stainless steel

(*1) See contamination protection accessory on A1-494. (*2) See A1-71. (*3) See A1-83.

Note) If the LM rail mount of a semi-standard model is of a tapped-hole LM rail type, add symbol “K” after the accuracy symbol.

Example: 4 MX7W M UU C1+120/100L P K T M

Add symbol K

Download data by searching for the corresponding model number on the Technical Support site. https://tech.thk.com

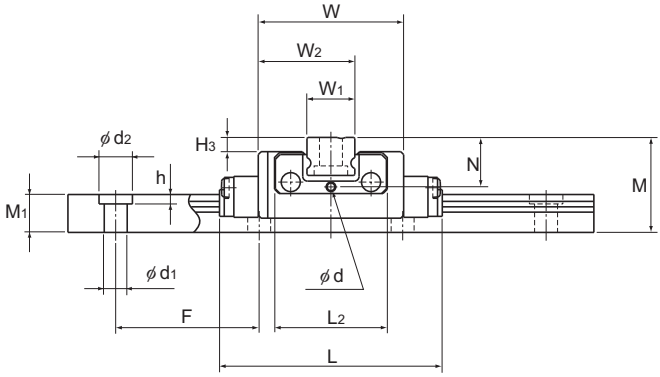

Unit: mm

	LM rail dimensions						Basic load rating		Static Permissible Moment* N-m		Mass	
	Width W_1	W_2	Height M_1	Pitch F	$d_1 \times d_2 \times h$	Length* Max	C kN	C_0 kN	M_0	M_B	LM block kg	LM rail kg/m
	5 $^{0}_{-0.02}$	10.1	4	15	2.4×3.5×1	200	0.59	1.1	2.57	2.57	0.01	0.14
	14 $^{0}_{-0.025}$	22.1	5.2	30	3.5×6×3.2	400	2.04	3.21	14.7	14.7	0.051	0.51

Note) The maximum length under "Length*" indicates the standard maximum length of an LM rail. (See A1-302.)
Static permissible moment*: static permissible moment value with 1 LM block

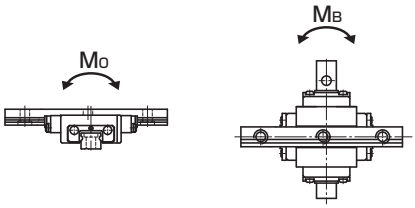

For the LM rail mounting hole, a tapped-hole LM rail type is available as semi-standard.

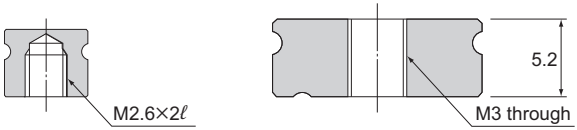

Model MX5M

Model MX7WM

When mounting the LM rail of model MX7WM, take into account the thread length of the mounting bolt in order not to let the bolt end stick out of the top face of the LM rail.

Options⇒A1-457

Standard Length and Maximum Length of the LM Rail

Table1 shows the standard lengths and the maximum lengths of model MX variations.

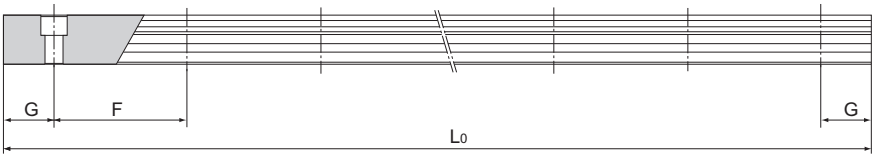

Table1 Standard Length and Maximum Length of the LM Rail for Model MX

Unit: mm

Model No.	MX 5	MX 7W
LM rail standard length (L_0)	40 55 70 100 130 160	50 80 110 140 170 200 260 290
Standard pitch F	15	30
G	5	10
Max length	480	480

Note) The maximum length varies with accuracy grades. Contact THK for details.

JR

LM Guide Structural Member Rail Model JR

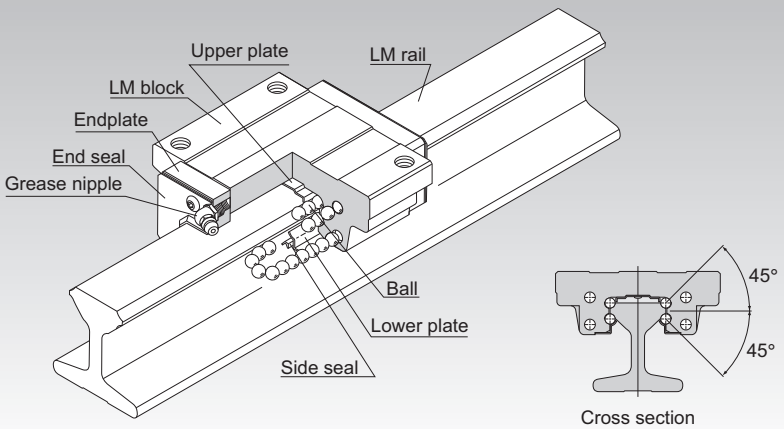

Point of Selection A1-10

Point of Design A1-434

Options A1-457

Model No. A1-522

Precautions on Use A1-528

Accessories for Lubrication A24-1

Mounting Procedure and Maintenance B1-89

Equivalent moment factor A1-43

Rated Loads in All Directions A1-58

Equivalent factor in each direction A1-60

Radial Clearance A1-72

Accuracy Standards A1-78

Shoulder Height of the Mounting Base and the Corner Radius A1-443

Permissible Error of the Mounting Surface A1-450

Dimensions of Each Model with an Option Attached A1-470

Structure and Features

Balls roll in four rows of raceways precision-ground on an LM rail and an LM block, and endplates incorporated in the LM block allow the balls to circulate. Since retainer plates hold the balls, they do not fall off even if the LM rail is pulled out.
Model JR uses the same LM block as model HSR, which has a proven track record and is highly reliable. The LM rail has a sectional shape with high flexural rigidity, and therefore can be used as a structural member.
Unlike the conventional LM Guide type, whose LM rail was secured onto the base with bolts when installed, model JR's LM rail is integrated with the mounting base, and the top of the LM rail has the same structure as LM Guide model HSR. The lower part of the LM rail has a hardness of 25HRC or less, making it easy to cut the rail and enabling the rail to be welded.
When welding the rail, we recommend using welding rods compliant with JIS D 5816. (suggested manufacturer and model number: Kobelco LB-52).

[4-way Equal Load]

Each row of balls is placed at a contact angle of 45° so that the rated loads applied to the LM block are uniform in the four directions (radial, reverse radial and lateral directions), enabling the LM Guide to be used in all orientations.

[Can be Mounted Even Under Rough Conditions]

Since the center of the cross-section of the LM rail is slightly thinner, even if the parallelism between two rails is not accurate the LM rail is capable of absorbing the error by bending inward or outward.

[Sectional Shape with High Flexural Rigidity]

Since the LM rail has a sectional shape with high flexural rigidity, it can also be used as a structural member. In addition, even when the LM rail is partially fastened or supported in cantilever, the distortion is minimal.

Fig.1

Second Moment of Inertia of the LM Rail

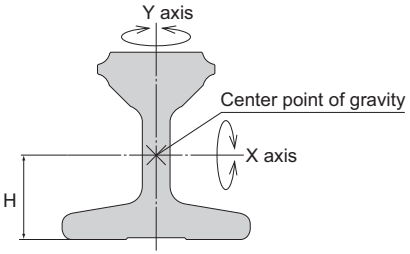

Fig.2

	Geometrical moment of inertia I [×10⁵ mm⁴]		Modulus of section Z [×10⁴ mm³]		Height of gravitational center H [mm]
	About X axis	About Y axis	About X axis	About Y axis	
JR 25	1.90	0.51	0.69	0.21	19.5
JR 35	4.26	1.32	1.43	0.49	24.3
JR 45	12.1	3.66	3.31	1.04	33.1
JR 55	27.6	6.54	5.89	1.40	43.3

Types and Features

Model JR-A

Specification Table⇒A1-308

The flange of its LM block has tapped holes.

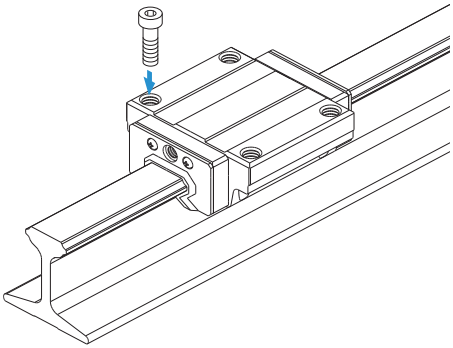

Model JR-B

Specification Table⇒A1-308

The flange of the LM block has through holes. Used in places where the table cannot have through holes for mounting bolts.

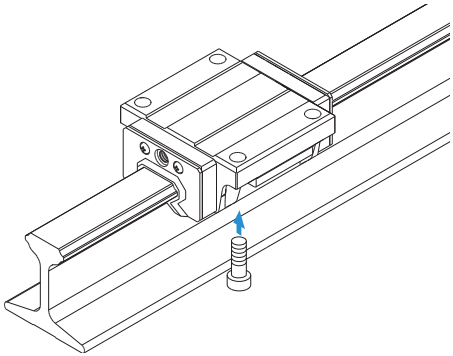

Model JR-R

Specification Table⇒A1-308

With this type, the LM block has a smaller width (W) and tapped holes. Used in places where the space for table width is limited.

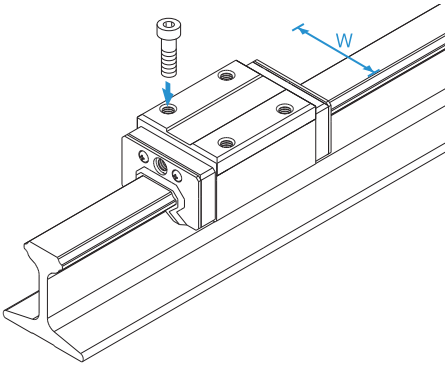

Models JR-A, JR-B and JR-R

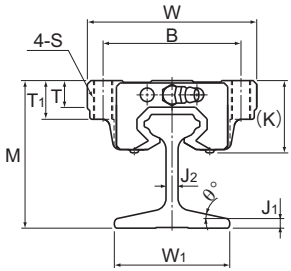

Models JR25 and 35-A

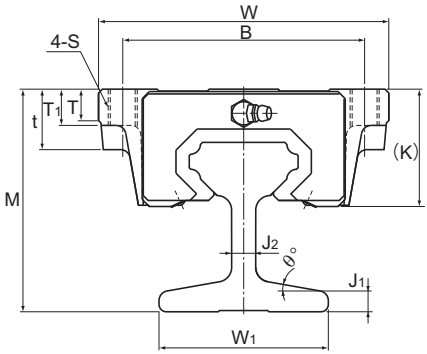

Models JR45 and 55-A

Model No.	Outer dimensions			LM block dimensions											
	Height M	Width W	Length L	B	C	H	S×ℓ	L_1	t	T	T_1	K	N	E	Grease nipple
JR 25A	61	70		57	45	—	M8*		—	11	16	30.5	6		
JR 25B	61	70	83.1	57	45	7	—	59.5	16	11	10	30.5	6	12	B-M6F
JR 25R	65	48		35	35	—	M6×8		—	9	—	34.5	10		
JR 35A	73	100		82	62	—	M10*		—	12	21	40	8		
JR 35B	73	100	113.6	82	62	9	—	80.4	21	12	13	40	8	12	B-M6F
JR 35R	80	70		50	50	—	M8×12		—	11.7	—	47.4	15		
JR 45A	92	120		100	80	—	M12*		25	13	15	50	10		
JR 45B	92	120	145	100	80	11	—	98	25	13	15	50	10	16	B-PT1/8
JR 45R	102	86		60	60	—	M10×17		—	15	—	59.4	20		
JR 55A	114	140		116	95	—	M14*		29	13.5	17	57	11		
JR 55B	114	140	165	116	95	14	—	118	29	13.5	17	57	11	16	B-PT1/8
JR 55R	124	100		75	75	—	M12×18		—	20.5	—	67	21		

Note) "*"indicates a through hole.

Model number coding

JR35 R 2 UU +1000L T

- JR35: Model number
- R: Type of LM block
- 2: No. of LM blocks used on the same rail
- UU: Contamination protection accessory symbol (*1)
- +1000L: LM rail length (in mm)
- T: Symbol for LM rail jointed use

(*1) See contamination protection accessory on A1-494

Download data by searching for the corresponding model number on the Technical Support site. https://tech.thk.com

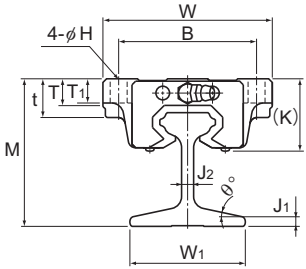

Model JR-B

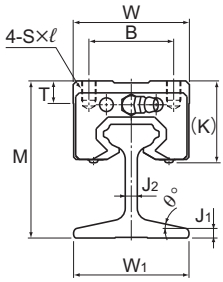

Model JR-R

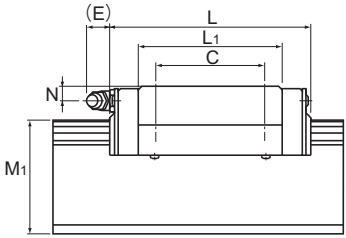

Unit: mm

	LM rail dimensions						Basic load rating		Static permissible moment kN-m*					Mass	
	Width				Height	Length*	C	C_0	M_A		M_B		M_C	LM block	LM rail
	W_1	J_1	J_2	θ°	M_1	Max	kN	kN	1 block	Double blocks	1 block	Double blocks	1 block	kg	kg/m
	48	4	5	12	47	2000	27.6	36.4	0.324	1.8	0.324	1.8	0.366	0.59 0.59 0.54	4.2
	54	7	8	10	54	4000	53.9	70.2	0.895	4.51	0.895	4.51	1.05	1.6 1.6 1.5	8.6
	70	8	10	10	70	4000	82.2	101	1.5	8.37	1.5	8.37	1.94	2.8 2.8 2.6	15.2
	93	4.8	11.6	12	90	4000	121	146	2.6	14.1	2.6	14.1	3.43	4.5 4.5 4.3	18.3

Note) The maximum length under "Length*" indicates the standard maximum length of an LM rail. (See A1-310.)
Static permissible moment*: 1 block: static permissible moment value with 1 LM block
Double blocks: static permissible moment value with 2 blocks closely contacting with each other

Options⇒A1-457

Standard Length and Maximum Length of the LM Rail

Table1 shows the standard lengths and the maximum lengths of model JR variations. If the maximum length of the desired LM rail exceeds them, jointed rails will be used. Contact THK for details.

Table1 Standard Length and Maximum Length of the LM Rail for Model JR

Unit: mm

Model No.	JR 25	JR 35	JR 45	JR 55
LM rail standard length (L_o)	1000 1500 2000	1000 2000 4000	1000 2000 4000	1000 2000 4000
Max length	2000	4000	4000	4000

Note1) If jointed rails are not allowed and a greater length than the maximum values above is required, contact THK.
Note2) For jointing two or more rails, a metal fitting like the one shown in Fig.3 is available. For the mounting method, see B1-99.

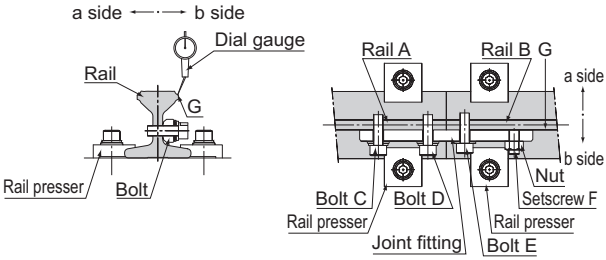

Fig.3

Model JB frame for LM rail clamps

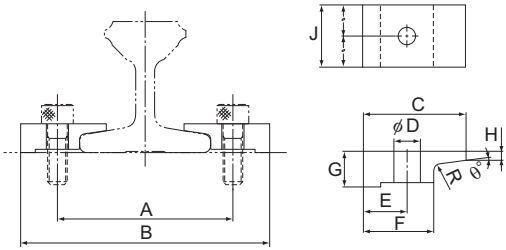

Unit: mm

Model No.	Mounting dimensions		Clamper dimensions									Bolt used
	A	B	C	D	E	F	G	H	R	J	θ°	
JB 25	57	78	25	7	10.5	15	10	3.8	R2	25	10	M 6
JB 35	72	102	35	9	15	24	12	3.1	R2	32	8	M 8
JB 45	90	130	45	11	20	30	16	5.4	R2	40	8	M10
JB 55	115	155	50	14	20	30	17	8.2	R2	50	10	M12

Model JT steel plate for LM rail clamps

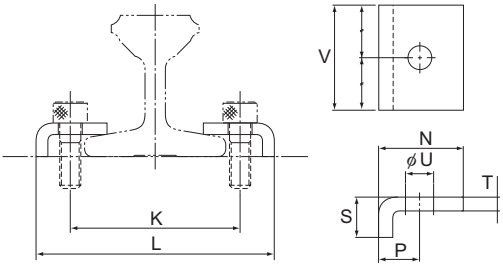

Unit: mm

Model No.	Mounting dimensions		Clamper dimensions						Bolt used
	K	L	N	P	S	T	U	V	
JT 25	57	79	25	11	10	4	7	25	M 6
JT 35	65	91	27	13	13	4.5	9	40	M 8
JT 45	84	114	33	15	16	6	11	50	M10
JT 55	110	148	50	19	15	6	14	50	M12

HCR

LM Guide R Guide Model HCR

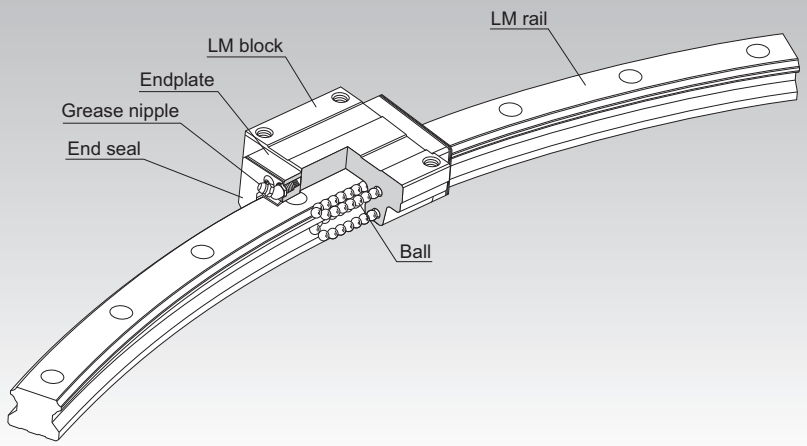

Point of Selection	**A1-10**
Point of Design	**A1-434**
Options	**A1-457**
Model No.	**A1-522**
Precautions on Use	**A1-528**
Accessories for Lubrication	**A24-1**
Mounting Procedure and Maintenance	**B1-89**
Equivalent moment factor	**A1-43**
Rated Loads in All Directions	**A1-58**
Equivalent factor in each direction	**A1-60**
Radial Clearance	**A1-72**
Accuracy Standards	**A1-78**
Shoulder Height of the Mounting Base and the Corner Radius	**A1-445**
Dimensions of Each Model with an Option Attached	**A1-470**

Structure and Features

Balls roll in four rows of raceways precision-ground on an LM rail and an LM block, and endplates incorporated in the LM block allow the balls to circulate.
With a structure that is basically the same as four-way equal load type LM Guide model HSR, which has a proven track record, this R Guide is a new concept product that allows highly accurate circular motion.

[Freedom of Design]
Multiple LM blocks can individually move on the same rail. By arranging LM blocks on the load points, efficient structural design is achieved.

[Shortened Assembly Time]
This model allows clearance-free, highly accurate circular motion as opposed to sliding guides or cam followers. You can easily assemble this model simply by mounting the LM rail and LM blocks with bolts.

[Allows Circular Motion of 5m or Longer]
It allows circular motion of 5 m or longer, which is impossible with swivel bearings.
In addition, use of this model makes it easy to assemble, disassemble and reassemble equipment that circularly moves.

[Capable of Receiving Loads in All Directions]
This model is capable of receiving loads in all directions since it has a structure that is basically the same as model HSR.

Types and Features

Model HCR

Specification Table⇒A1-316

The flange of its LM block has tapped holes.

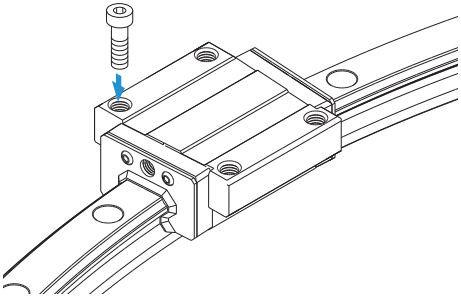

R Guide Model HCR

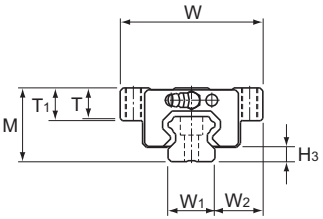

Model No.	Outer dimensions			LM block dimensions									H_3
	Height M	Width W	Length L	B	C	S	L_1	T	T_1	N	E	Grease nipple	
HCR 12A+60/100R	18	39	44.6	32	18	M4	30.5	4.5	5	3.4	3.5	PB107	3.1
HCR 15A+60/150R	24	47	54.5	38	24	M5	38.8	10.3	11	4.5	5.5	PB1021B	4.8
HCR 15A+60/300R			55.5		28								
HCR 15A+60/400R			55.8		28								
HCR 25A+60/500R	36	70	81.6	57	45	M8	59.5	14.9	16	6	12	B-M6F	7
HCR 25A+60/750R			82.3										
HCR 25A+60/1000R			82.5										
HCR 35A+60/600R	48	100	107.2	82	58	M10	80.4	19.9	21	8	12	B-M6F	8.5
HCR 35A+60/800R			107.5										
HCR 35A+60/1000R			108.2										
HCR 35A+60/1300R			108.5										
HCR 45A+60/800R	60	120	136.7	100	70	M12	98	23.9	25	10	16	B-PT1/8	11.5
HCR 45A+60/1000R			137.3										
HCR 45A+60/1200R			137.3										
HCR 45A+60/1600R			138										
HCR 65A+60/1000R	90	170	193.8	142	106	M16	147	34.9	37	19	16	B-PT1/8	15
HCR 65A+60/1500R			195.4										
HCR 65A+45/2000R			195.9										
HCR 65A+45/2500R			196.5										
HCR 65A+30/3000R			196.5										

Model number coding

HCR25A 2 UU C1 +60 / 1000R H 6 T

- Model number
- No. of LM blocks used on the same rail
- Contamination protection accessory symbol (*1)
- Radial clearance symbol (*2): Normal (No symbol), Light preload (C1)
- R-Guide center angle
- LM rail radius (in mm)
- Accuracy symbol (*3): Normal grade (No Symbol), High accuracy grade (H)
- Number of LM rail joints used on one axis (*4)
- Symbol for LM rail jointed use (*5)

(*1) See A1-494 (contamination protection accessories). (*2) See A1-72. (*3) See A1-78.
(*4) Number of LM rails used on one arc. Contact THK for details.
(*5) When using joined LM rails, the dust prevention seal must be a low-resistance end seal (dust prevention code: LL).

Download data by searching for the corresponding model number on the Technical Support site. https://tech.thk.com

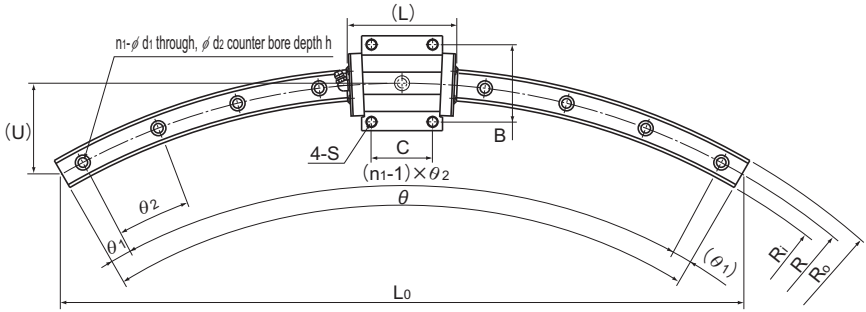

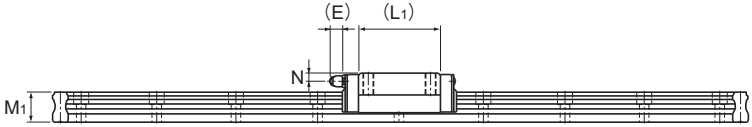

Unit: mm

	LM rail dimensions													Basic load rating		Static permissible moment kN-m*					Mass	
						Width		Height						C	C_0	M_A		M_B		M_C	LM block	LM rail
	R	R_0	R_i	L_0	U	W_1	W_2	M_1	$d_1 \times d_2 \times h$	n_1	θ°	θ_1°	θ_2°	kN	kN	1 block	Double blocks	1 block	Double blocks	1 block	kg	kg/m
	100	106	94	100	13.4	12	13.5	11	3.5×6×5	3	60	7	23	4.7	8.53	0.0409	0.228	0.0409	0.228	0.0445	0.08	0.83
	150	157.5	142.5	150	20.1	15	16	15	4.5×7.5×5.3	3	60	7	23	6.66	10.8	0.0805	0.457	0.0805	0.457	0.0844	0.2	1.5
	300	307.5	292.5	300	40					5		6	12	8.33	13.5							
	400	407.5	392.5	400	54					7		3	9	8.33	13.5							
	500	511.5	488.5	500	67	23	23.5	22	7×11×9	9	60	2	7	19.9	34.4	0.307	1.71	0.307	1.71	0.344	0.59	3.3
	750	761.5	738.5	750	100					12		2.5	5									
	1000	1011.5	988.5	1000	134					15		2	4									
	600	617	583	600	80	34	33	29	9×14×12	7	60	3	9	37.3	61.1	0.782	3.93	0.782	3.93	0.905	1.6	6.6
	800	817	783	800	107					11		2.5	5.5									
	1000	1017	983	1000	134					12		2.5	5									
	1300	1317	1283	1300	174					17		2	3.5									
	800	822.5	777.5	800	107	45	37.5	38	14×20×17	8	60	2	8	60	95.6	1.42	7.92	1.42	7.92	1.83	2.8	11.0
	1000	1022.5	977.5	1000	134					10		3	6									
	1200	1222.5	1177.5	1200	161					12		2.5	5									
	1600	1622.5	1577.5	1600	214					15		2	4									
	1000	1031.5	968.5	1000	134	63	53.5	53	18×26×22	8	60	2	8	141	215	4.8	23.5	4.8	23.5	5.82	8.5	22.5
	1500	1531.5	1468.5	1500	201					10	60	3	6									
	2000	2031.5	1968.5	1531	152					12	45	0.5	4									
	2500	2531.5	2468.5	1913	190					13	45	1.5	3.5									
	3000	3031.5	2968.5	1553	102					10	30	1.5	3									

Note) LM rail radiuses other than the radiuses in the above table are also available. Contact THK for details.
The R-Guide center angles in the table are maximum manufacturing angles. To obtain angles greater than them, rails must be additionally connected. Contact THK for details.
Static permissible moment*: 1 block: static permissible moment value with 1 LM block
Double blocks: static permissible moment value with 2 blocks closely contacting with each other
The balls will fall out of the LM block if it is removed from the LM rail.

Options⇒A1-457

HMG

LM Guide Straight-Curved Guide Model HMG

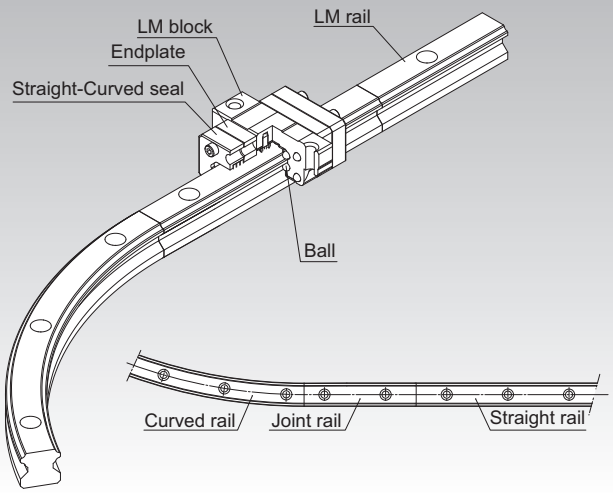

Point of Selection	**A1-10**
Point of Design	**A1-434**
Options	**A1-457**
Model No.	**A1-522**
Precautions on Use	**A1-528**
Accessories for Lubrication	**A24-1**
Mounting Procedure and Maintenance	**B1-89**
Equivalent moment factor	**A1-43**
Rated Loads in All Directions	**A1-58**
Equivalent factor in each direction	**A1-60**
Radial Clearance	**A1-72**
Accuracy Standards	**A1-77**
Shoulder Height of the Mounting Base and the Corner Radius	**A1-445**
Dimensions of Each Model with an Option Attached	**A1-470**

Structure and Features

The Straight-Curved Guide HMG is a new straight-curved guide that allows the same type of LM blocks to continuously move on straight and curved rails by combining the technologies of the LM Guide HSR and the R Guide HCR. It achieves drastic cost reduction through improvement of work efficiency at the assembly and conveyance lines and the inspection equipment and simplification of the structure by eliminating a lift and a table.

[Freedom of Design]

It allows free combinations of straight and curved shapes.
Since LM blocks can smoothly transit between the straight and curved sections, various combinations of straight and curved rails can be joined into various shapes such as O, U, L and S shapes. In addition, HMG allows a large table to be mounted and a heavy object to be carried through combinations of multiple blocks on a single rail or 2 or more LM rails. Thus, it provides great freedom of design.

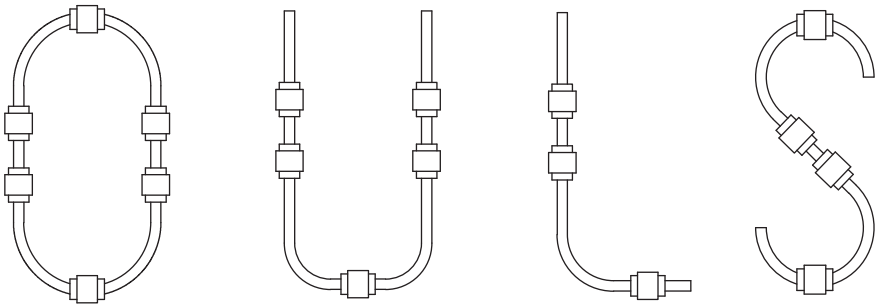

O shape U shape L shape S shape

Fig.1 Examples of Joining Rails into Different Shapes

[Straight-Curved Seals]

The Model HMG is available with seals that can be used for both straight and curved sections to prevent foreign materials from entering. These straight-curved seals provide sealing for both the straight and curved sections, preventing foreign materials from entering the unit.

[Shortened Transportation Time]

Unlike the shuttle method, using HMG units in a circulating system allows workpieces to be placed while other workpieces are being inspected or mounted, thus to significantly improve process time. Increasing the number of tables can further shorten process time.

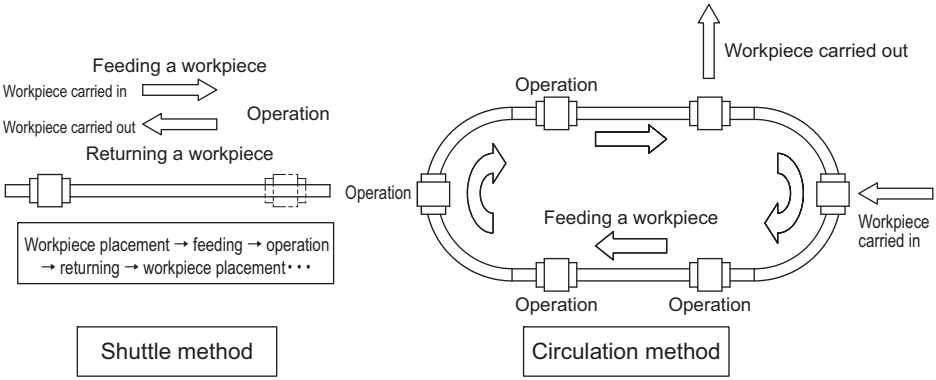

Fig.2 Improved process time

[Cost Reduction through a Simplified Mechanism]

Combination of straight and curved rails eliminates a lift and a turntable conventionally used for changing directions in the conveyance and production lines. Therefore, use of HMG simplifies the mechanism and eliminates a large number of parts, allowing the cost to be reduced. Additionally, man-hours in designing can also be reduced.

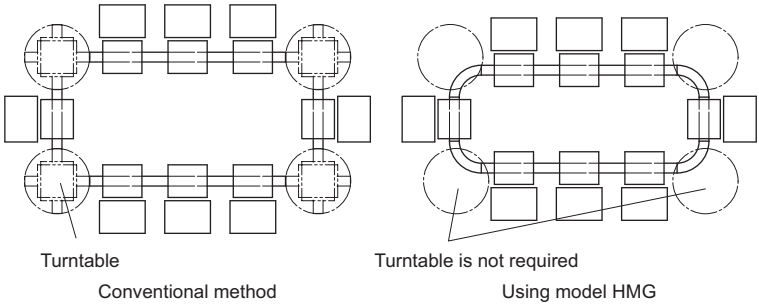

Fig.3

Types and Features

Model HMG

Specification Table⇒A1-324

The flange of the LM block has tapped holes. Can be mounted from the top or the bottom.

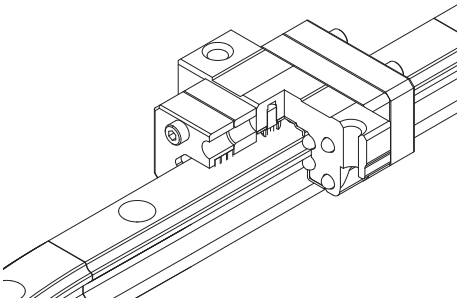

Examples of Table Mechanisms

The Straight-Curved Guide HMG requires a rotating mechanism or a slide mechanism for the table to rotate the curved sections when 2 or more rails are used or when 2 or more LM blocks are connected on a single rail. Refer to Fig.4 for examples of such mechanisms.

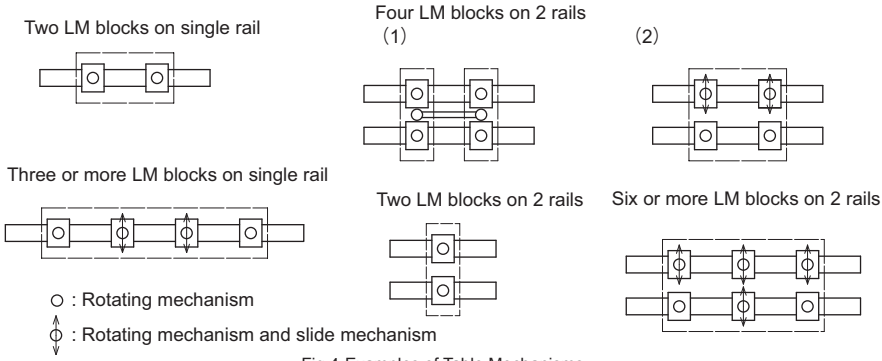

Fig.4 Examples of Table Mechanisms

Fig.5 shows examples of designing a table when units are used on multiple axes. HMG requires a rotating mechanism and a slide mechanism since the table is decentered when an LM block transits from a straight section to a curved section. The amount of decentering differs according to the radius of the curved section and the LM block span. Therefore, it is necessary to design the system in accordance with the corresponding specifications.
Fig.6 shows detail drawings of the slide and rotating mechanisms. In the figure, LM Guides are used in the slide mechanism and Cross-Roller Rings in the rotating mechanism to achieve smooth sliding and rotating motions.
For driving the Straight-Curved Guide, belt drives and chain drives are available.

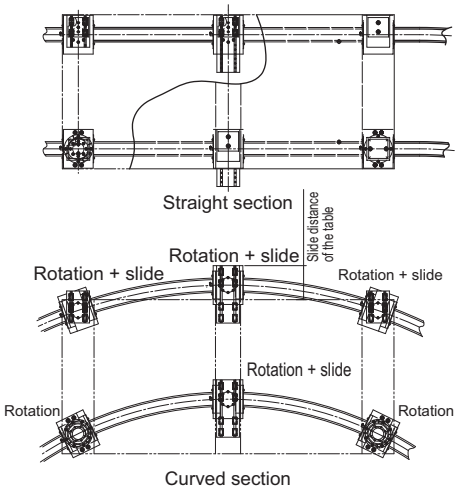

Fig.5

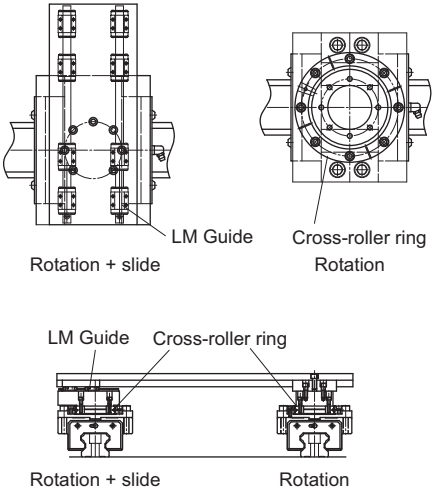

Fig.6

Model HMG

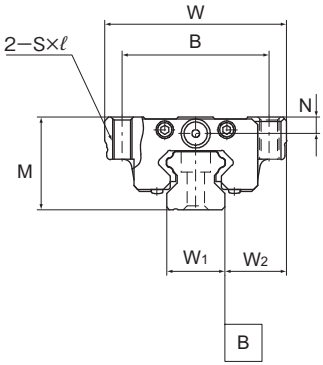

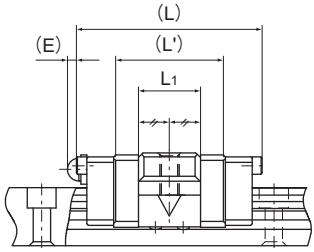

Model No.	Outer dimensions				LM block dimensions					LM rail dimensions			
										LM rail			Height
	M	W	L	L´	B	S×ℓ	L_1	N	E	W_1	W_2	F	M_1
HMG 15A	24	47	48	28.8	38	M5×11	16	4.3	5.5	15	16	60	15
HMG 25A	36	70	62.2	42.2	57	M8×16	25.6	6	12	23	23.5	60	22
HMG 35A	48	100	80.6	54.6	82	M10×21	32.6	8	12	34	33	80	29
HMG 45A	60	120	107.6	76.6	100	M12×25	42.6	10	16	45	37.5	105	38
HMG 65A	90	170	144.4	107.4	142	M16×37	63.4	19	16	63	53.5	150	53

Download data by searching for the corresponding model number on the Technical Support site. https://tech.thk.com

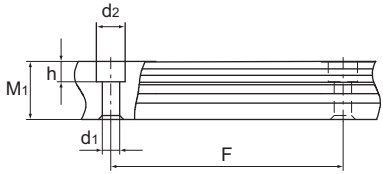

Straight rail

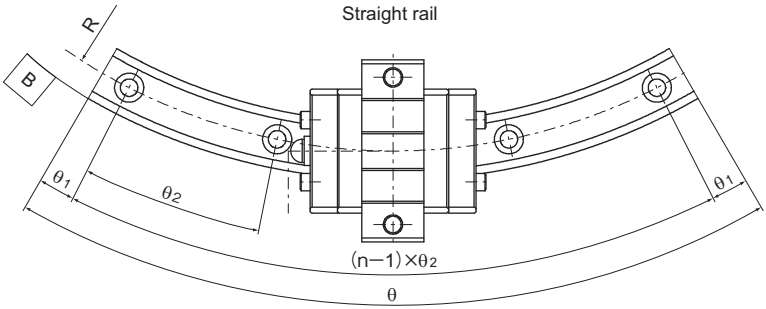

Curved rail

Unit: mm

	Mounting hole	Curved rail					Basic dynamic load rating (C)	Basic static load rating (C_0)	
	$d_1 \times d_2 \times h$	R	n	θ°	θ_1°	θ_2°	Resultant load (C) kN	Straight section (Cost) kN	Curved section (Cor) kN
	4.5×7.5×5.3	150	3	60	7	23	2.56	4.23	0.44
		300	5	60	6	12			
		400	7	60	3	9			
	7×11×9	500	9	60	2	7	9.41	10.8	6.7
		750	12	60	2.5	5			
		1000	15	60	2	4			
	9×14×12	600	7	60	3	9	17.7	19	11.5
		800	11	60	2.5	5.5			
		1000	12	60	2.5	5			
		1300	17	60	2	3.5			
	14×20×17	800	8	60	2	8	28.1	29.7	18.2
		1000	10	60	3	6			
		1200	12	60	2.5	5			
		1600	15	60	2	4			
	18×26×22	1000	8	60	2	8	66.2	66.7	36.2
		1500	10	60	3	6			
		2000	12	45	0.5	4			
		2500	13	45	1.5	3.5			
		3000	10	30	1.5	3			

When a moment is applied where one LM block is specified per axis, the LM block may experience non-smooth motion.
We recommend that multiple LM blocks be used per axis when a moment is applied.
Table 1 shows the static permissible moment of an LM block in the M_A, M_B and M_C directions.

Table1 Static Permissible Moments of Model HMG

Unit: kN-m

Model No.	M_A		M_B		M_C	
	Straight section	Curved section	Straight section	Curved section	Straight section	Curved section
HMG 15	0.008	0.007	0.008	0.01	0.027	0.003
HMG 25	0.1	0.04	0.1	0.05	0.11	0.07
HMG 35	0.22	0.11	0.22	0.12	0.29	0.17
HMG 45	0.48	0.2	0.48	0.22	0.58	0.34
HMG 65	1.47	0.66	1.47	0.73	1.83	0.94

Options⇒A1-457

Jointed LM rail

[Level Difference Specification for the Joint]

An accuracy error in LM rail installation has influence on the service life of the product. When installing the LM rail, take care to minimize the level difference in the joint within the specification indicated in Table2. For the joint between curved rails and another between the curved section and the joint rail, we recommend using a flushing piece like the one shown in Fig.7. When using the flushing piece, place the fixed butt piece on the outer side, push the rail against the butt piece, and then adjust the level difference in the joint section by turning the adjustment screw from the inner side.

Table2 Level Difference Specification for the Joint

Unit: mm

Model No.	Ball raceway, side face	Upper face	Maximum clearance of the joint section
15	0.01	0.02	0.6
25	0.01	0.02	0.7
35	0.01	0.02	1.0
45	0.01	0.02	1.3
65	0.01	0.02	1.3

Note) Place the pin on the outer circumference and the bolt on the inner circumference.

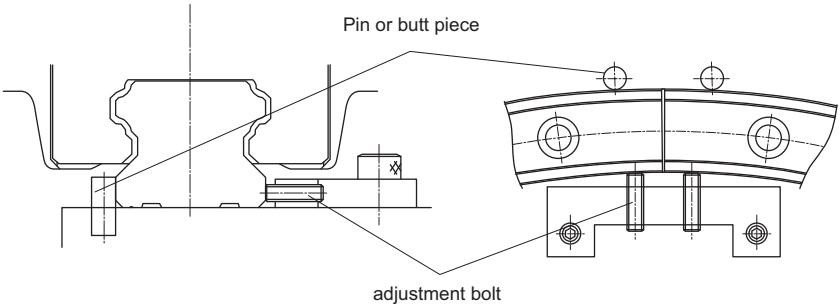

Fig.7 Flush piece

[About the Curved Section]

The curved section of model HMG has a clearance for a structural reason. Therefore, this model may not be used in applications where highly accurate feed is required. In addition, the curved section cannot withstand a large moment. When a large moment is applied, it is necessary to increase the number of LM blocks or LM rails. For permissible moment values, see Table1 on A1-325.

[Jointed LM Rail]

Model HMG always requires a jointed rail where an LM block travels from the straight section to the curved section and where the curve is inverted such as an S curve. Take this into account when design the system.

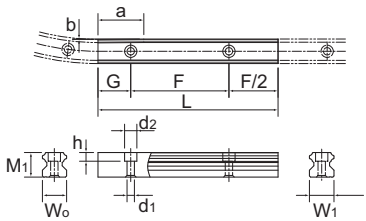

Table3 Dimension of the Jointed Rail

Unit: mm

Model No.	Dimension of the jointed rail							
	Height	Pitch	Mounting hole	Width		Taper length	Taper depth	Radius
	M_1	F	$d_1 \times d_2 \times h$	W_1	W_0	a	b	R
15A	15	60	4.5×7.5×5.3	15	14.78	28	0.22	150
					14.89		0.11	300
					14.92		0.08	400
25A	22	60	7×11×9	23	22.83	42	0.17	500
					22.89		0.11	750
					22.92		0.08	1000
35A	29	80	9×14×12	34	33.77	54	0.23	600
					33.83		0.17	800
					33.86		0.14	1000
					33.9		0.1	1300
45A	38	105	14×20×17	45	44.71	76	0.29	800
					44.77		0.23	1000
					44.81		0.19	1200
					44.86		0.14	1600
65A	53	150	18×26×22	63	62.48	107	0.52	1000
					62.66		0.34	1500
					62.74		0.26	2000
					62.8		0.2	2500
					62.83		0.17	3000

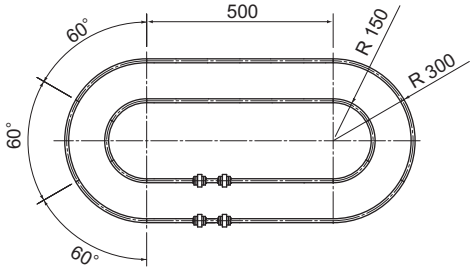

Fig.8 Example of model No.

Model number coding

When 2 rails are used

HMG15A 2 UU C1 +1000L T + 60/150R 6T + 60/300R 6T -Ⅱ

- HMG15A: Model number
- 2: No. of LM blocks used on the same rail
- UU: Contamination protection accessory symbol (*1)
- C1: Radial clearance symbol; Normal (No symbol); Light preload (C1)
- +1000L: Overall linear LM rail length per rail
- T: Symbol for linear LM rail joint
- 60: Center angle of one inner curved rail
- 150R: Radius of inner curved rail
- 6T: No. of inner curved LM rails jointed
- 60: Center angle of one outer curved rail
- 300R: Radius of outer curved rail
- 6T: No. of outer curved LM rails jointed
- -Ⅱ: Symbol for No. of rails used on the same plane (*2)

(*1) See contamination protection accessory on A1-494. (*2) See A1-13.

Note) This model number indicates that an LM block and an LM rail constitute one set (i.e., the required number of sets when 2 rails are used is 2).
The standard Model HMG does not have a seal. To attach a seal, make sure to specify a straight-curved seal (code: UU). For the model number above, use Fig.8.

NSR-TBC

LM Guide Self-aligning Type Model NSR-TBC

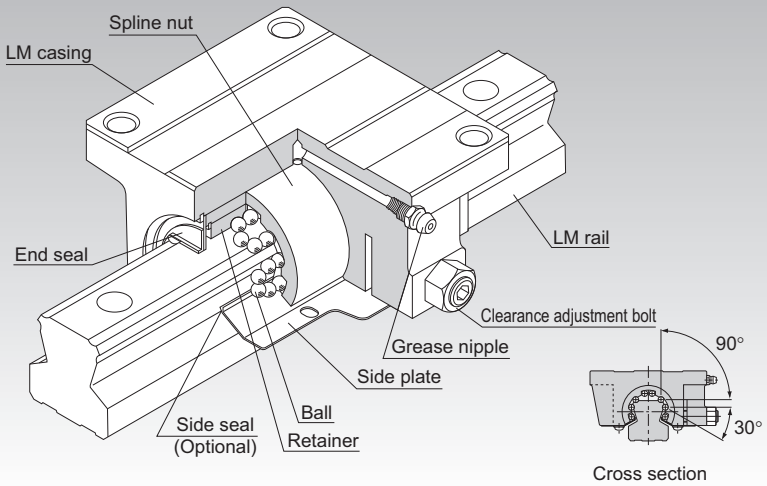

Point of Selection	**A1-10**
Point of Design	**A1-434**
Options	**A1-457**
Model No.	**A1-522**
Precautions on Use	**A1-528**
Accessories for Lubrication	**A24-1**
Mounting Procedure and Maintenance	**B1-89**
Equivalent moment factor	**A1-43**
Rated Loads in All Directions	**A1-58**
Equivalent factor in each direction	**A1-60**
Radial Clearance	**A1-72**
Accuracy Standards	**A1-76**
Shoulder Height of the Mounting Base and the Corner Radius	**A1-443**
Permissible Error of the Mounting Surface	**A1-451**
Dimensions of Each Model with an Option Attached	**A1-470**

Structure and Features

Model NSR-TBC is the only LM Guide whose casing consists of two pieces instead of a single-piece LM block. The rigid, cast iron casing contains a cylindrical spline nut that is partially cut at an angle of 120°. This enables the model to self-aligning on the fitting surface with the casing, thus to permit rough installation.

[Capable of Receiving Loads in All Directions]
NSR-TBC has four rows of balls. The balls are arranged in two rows on each shoulder of the LM rail, and can receive loads in all four directions: upward, downward and lateral directions. Due to the self-aligning structure, however, a rotational moment (M_C) cannot be applied in a single-rail configuration.

[Easy Installation and Accuracy Establishment]
Model NSR-TBC is highly capable of performing self-adjustment and self-alignment. As a result, even if two rails are not mounted with accuracy, the LM casing absorbs the error and it does not affect the traveling performance. Accordingly, the machine performance will not be deteriorated.

Types and Features

Model NSR-TBC

Specification Table⇒A1-330

The flange of the LM casing has through holes, allowing the LM Guide to be mounted from the bottom.

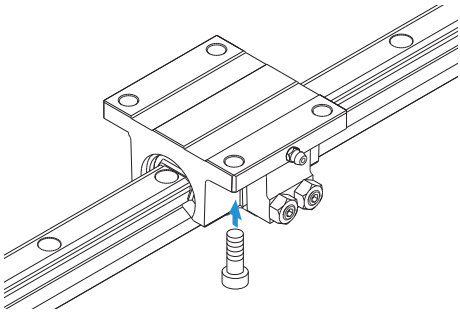

Model NSR-TBC

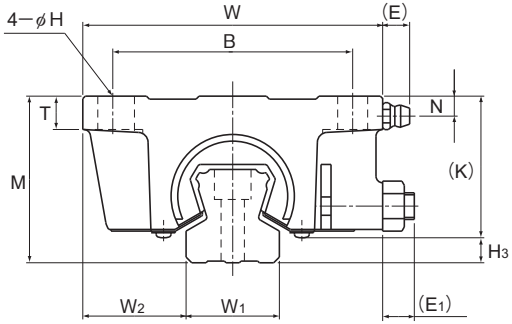

Model No.	Outer dimensions			LM casing dimensiones									
	Height	Width	Length									Grease nipple	
	M	W	L	B	C	H	T	K	N	E	E_1		H_3
NSR 20TBC	40	70	67	55	50	6.6	8	34.5	5.5	8.5	7	A-M6F	5.5
NSR 25TBC	50	90	78	72	60	9	10	43.5	6	8.5	7.5	A-M6F	6.5
NSR 30TBC	60	100	90	82	72	9	12	51	8	8.5	9.5	A-M6F	9
NSR 40TBC	75	120	110	100	80	11	13	64	10	8.5	12	A-M6F	10.5
NSR 50TBC	82	140	123	116	95	14	15	74	9	15	15	A-PT1/8	8
NSR 70TBC	105	175	150	150	110	14	18	95.5	10	15	16.5	A-PT1/8	9.5

Model number coding

NSR50TBC 2 UU C1 +1200L P T -Ⅱ

- NSR50TBC: Model number
- 2: No. of LM cases used on the same rail
- UU: Contamination protection accessory symbol (*1)
- C1: Radial clearance symbol (*2)
  - Normal (No symbol)
  - Light preload (C1)
  - Medium preload (C0)
- +1200L: LM rail length (in mm)
- P: Accuracy symbol (*3)
  - Normal grade (No Symbol)/High accuracy grade (H)
  - Precision grade (P)/Super precision grade (SP)
  - Ultra precision grade (UP)
- T: Symbol for LM rail jointed use
- -Ⅱ: Symbol for No. of rails used on the same plane (*4)

(*1) See contamination protection accessory on A1-494. (*2) See A1-72. (*3) See A1-76. (*4) See A1-13.

Note) This model number indicates that a single-rail unit constitutes one set. (i.e., required number of sets when 2 rails are used in parallel is 2 at a minimum.)

Download data by searching for the corresponding model number on the Technical Support site. https://tech.thk.com

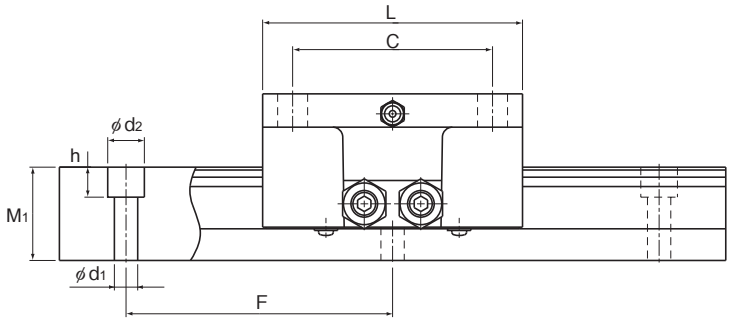

Unit: mm

	LM rail dimensions						Basic load rating		Static Permissible Moment* kN-m		Mass	
	Width		Height	Pitch		Length*	C	C_0	M_A	M_B	LM casing	LM rail
	W_1 ±0.05	W_2	M_1	F	$d_1 \times d_2 \times h$	Max	kN	kN	Double casings	Double casings	kg	kg/m
	23	23.5	23	60	6×9.5×8.5	2200	9.41	18.6	0.31	0.27	0.62	3.1
	28	31	28	80	7×11×9	3000	14.9	26.7	0.53	0.46	1.13	4.7
	34	33	34.5	80	7×11×9	3000	22.5	38.3	0.85	0.74	1.8	7.2
	45	37.5	44.5	105	9×14×12	3000	37.1	62.2	1.7	1.5	3.5	12.2
	48	46	47.5	120	11×17.5×14	3000	55.1	87.4	2.7	2.4	5.2	14.3
	63	56	62	150	14×20×17	3000	90.8	152	9.8	4.9	9.4	27.6

Note) The maximum length under "Length*" indicates the standard maximum length of an LM rail. (See A1-332.)
Static permissible moment*: Double casings: static permissible moment value with 2 casings closely contacting with each other

Options⇒A1-457

Standard Length and Maximum Length of the LM Rail

Table1 shows the standard lengths and the maximum lengths of model NSR-TBC variations. If the maximum length of the desired LM rail exceeds them, jointed rails will be used. Contact THK for details.
For the G dimension when a special length is required, we recommend selecting the corresponding G value from the table. The longer the G dimension is, the less stable the G area may become after installation, thus causing an adverse impact to accuracy.

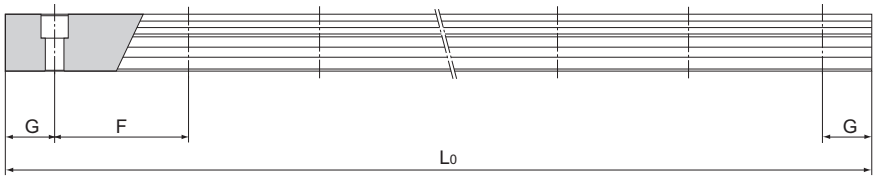

Table1 Standard Length and Maximum Length of the LM Rail for Model NSR-TBC

Unit: mm

Model No.	NSR 20TBC	NSR 25TBC	NSR 30TBC	NSR 40TBC	NSR 50TBC	NSR 70TBC
LM rail standard length (L_o)	220 280 340 460 640 820 1000 1240 1600	280 440 600 760 1000 1240 1640 2040 2520 3000	280 440 600 760 1000 1240 1640 2040 2520 3000	570 885 1200 1620 2040 2460 2985	780 1020 1260 1500 1980 2580 2940	1270 1570 2020 2620
Standard pitch F	60	80	80	105	120	150
G	20	20	20	22.5	30	35
Max length	2200	3000	3000	3000	3000	3000

Note1) The maximum length varies with accuracy grades. Contact THK for details.
Note2) If jointed rails are not allowed and a greater length than the maximum values above is required, contact THK.

HSR-M1

LM Guide High Temperature Type Model HSR-M1

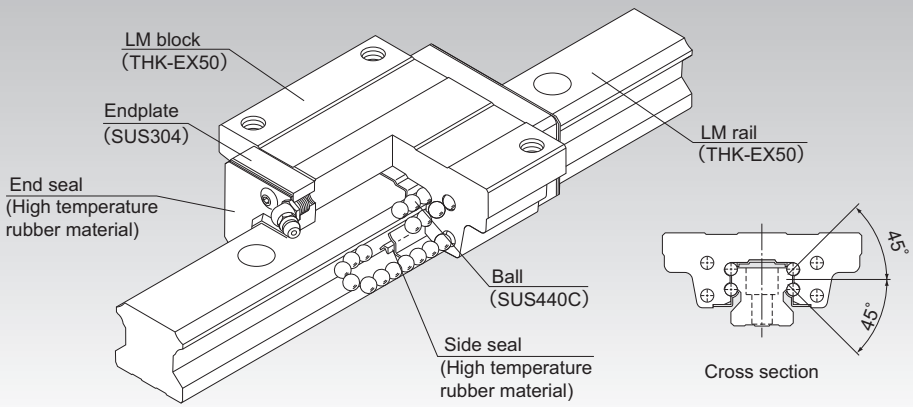

Point of Selection	**A1-10**
Point of Design	**A1-434**
Options	**A1-457**
Model No.	**A1-522**
Precautions on Use	**A1-528**
Accessories for Lubrication	**A24-1**
Mounting Procedure and Maintenance	**B1-89**
Equivalent moment factor	**A1-43**
Rated Loads in All Directions	**A1-58**
Equivalent factor in each direction	**A1-60**
Radial Clearance	**A1-71**
Accuracy Standards	**A1-76**
Shoulder Height of the Mounting Base and the Corner Radius	**A1-445**
Permissible Error of the Mounting Surface	**A1-450**
Dimensions of Each Model with an Option Attached	**A1-470**

Structure and Features

Balls roll in four rows of raceways precision-ground on an LM rail and an LM block, and endplates incorporated in the LM block allow the balls to circulate.
Each row of balls is placed at a contact angle of 45° so that the rated loads applied to the LM block are uniform in the four directions (radial, reverse radial and lateral directions), enabling the LM Guide to be used in all orientations.
The high temperature type LM Guide is capable of being used at service temperature up to 150℃ thanks to THK's unique technologies in material, heat treatment and lubrication.

[Maximum Service Temperature: 150℃]
Use of stainless steel in the endplates and high temperature rubber in the end seals achieves the maximum service temperature of 150℃.

[Dimensional Stability]
Since it is dimensionally stabilized, it demonstrates superb dimensional stability after being heated or cooled (note that it shows linear expansion at high temperature).

[Highly Corrosion Resistant]
Since the LM block, LM rail and balls use stainless steel, which is highly corrosion resistant, this model is optimal for clean room applications.

[High Temperature Grease]
This model uses high temperature grease that shows little grease-based fluctuation in rolling resistance even if temperature changes from low to high levels.

● Dimensional Stability Data

Since this model has been treated for dimensional stability, its dimensional change after being cooled or heated is only minimal.

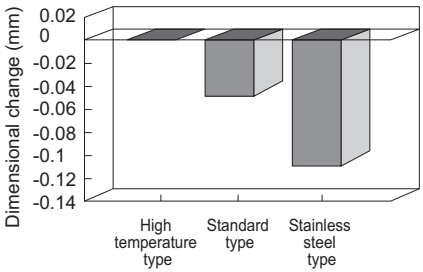

Overall LM Rail Length

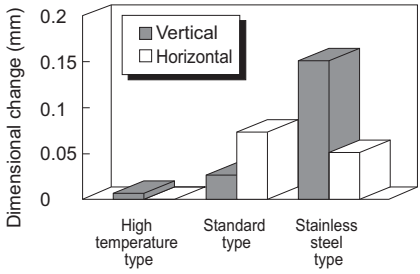

Curvature of the LM Rail

Note1) The above data on overall length and curvature indicate dimensional change when the LM rail is cooled to normal temperature after being heated at 150℃ for 100 hours.
Note2) The samples consist of high temperature, standard and stainless steel types of model HSR25 + 580L.

● Rolling Resistance Data in Relation to Grease

Use a high temperature grease with which the rolling resistance of the LM system little fluctuates even temperature changes from a normal to high range.

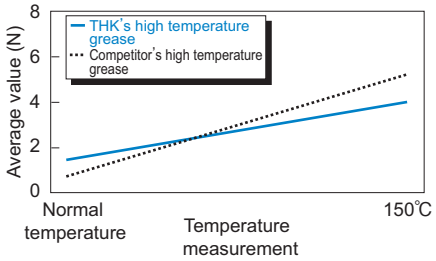

Average Value

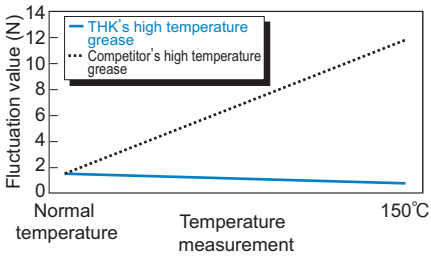

Fluctuation Value

For the measurements above, model HSR25M1R1C1 is used.

● Thermal Characteristics of LM Rail and LM Block Materials

Specific heat capacity: 0.481 J/(g•K)
Thermal conductivity: 20.67 W/(m•K)
Average coefficient of linear expansion: 11.8×10^{-6}/℃

Types and Features

Model HSR-M1A

Specification Table⇒A1-340

The flange of its LM block has tapped holes.

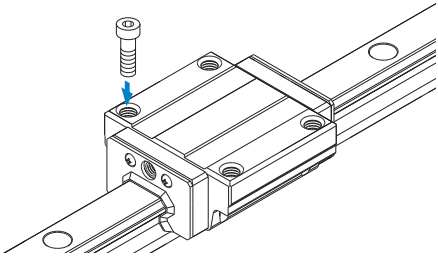

Model HSR-M1LA

Specification Table⇒A1-340

The LM block has the same cross-sectional shape as model HSR-M1A, but has a longer overall LM block length (L) and a greater rated load.

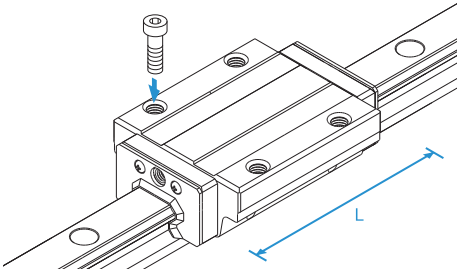

Model HSR-M1B

Specification Table⇒A1-342

The flange of the LM block has through holes. Used in places where the table cannot have through holes for mounting bolts.

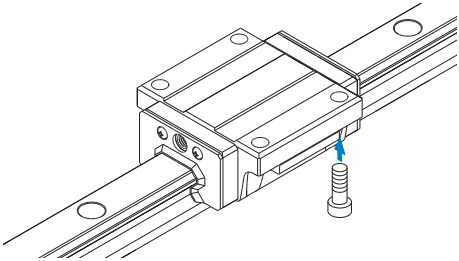

Model HSR-M1LB

Specification Table⇒A1-342

The LM block has the same sectional shape as model HSR-M1B, but has a longer overall LM block length (L) and a greater rated load.

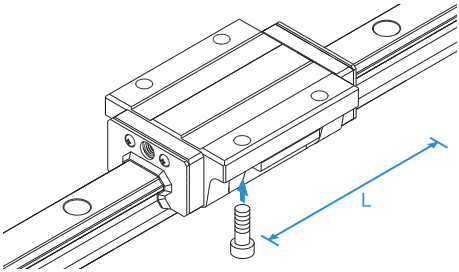

Model HSR-M1R

Specification Table⇒A1-344

With this type, the LM block has a smaller width (W) and tapped holes. Used in places where the space for table width is limited.

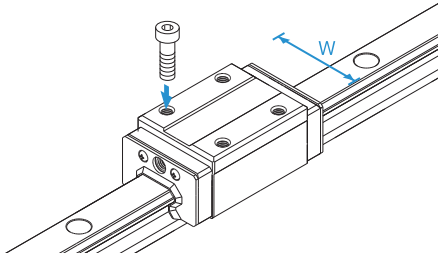

Model HSR-M1LR

Specification Table⇒A1-344

The LM block has the same sectional shape as model HSR-M1R, but has a longer overall LM block length (L) and a greater rated load.

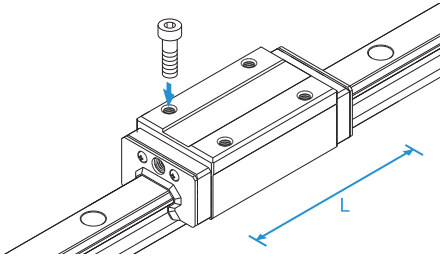

Model HSR-M1YR

Specification Table⇒A1-346

When using two units of LM Guide facing each other, the previous model required much time in machining the table and had difficulty achieving the desired accuracy and adjusting the clearance. Since model HSR-M1YR has tapped holes on the side of the LM block, a simpler structure is gained and significant man-hour cutting and accuracy increase can be achieved.

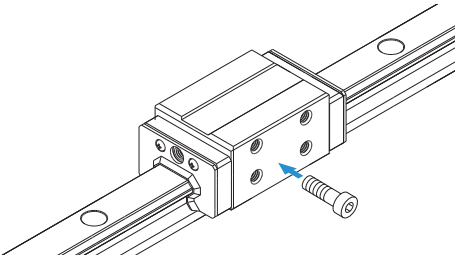

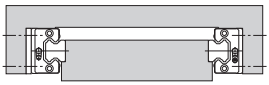

Fig.1 Conventional Structure

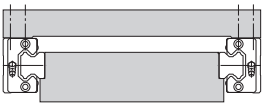

Fig.2 Mounting Structure for Model HSR-M1YR

Service Life

When using this product in temperatures higher than 100°C, always multiply the basic dynamic load rating by the temperature coefficient when calculating the rated service life. See A1-64 for details.

Models HSR-M1A and HSR-M1LA

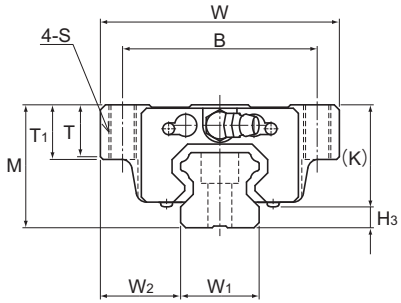

Model No.	Outer dimensions			LM block dimensions										
	Height M	Width W	Length L	B	C	S	L_1	T	T_1	K	N	E	Grease nipple	H_3
HSR 15M1A	24	47	59.6	38	30	M5	38.8	6.5	11	19.3	4.3	5.5	PB1021B	4.7
HSR 20M1A HSR 20M1LA	30	63	76 92	53	40	M6	50.8 66.8	9.5	10	26	5	12	B-M6F	4
HSR 25M1A HSR 25M1LA	36	70	83.9 103	57	45	M8	59.5 78.6	11	16	30.5	6	12	B-M6F	5.5
HSR 30M1A HSR 30M1LA	42	90	98.8 121.4	72	52	M10	70.4 93	9	18	35	7	12	B-M6F	7
HSR 35M1A HSR 35M1LA	48	100	112 137.4	82	62	M10	80.4 105.8	12	21	40.5	8	12	B-M6F	7.5

Note) The length L of the high temperature type LM Guide model HSR is longer than normal type of model HSR. (Dimension L_1 is the same.)

Model number coding

HSR25 M1 A 2 UU C1 +1240L P T -Ⅱ

- HSR25: Model number
- M1: Symbol for high temperature type LM Guide
- A: Type of LM block
- 2: No. of LM blocks used on the same rail
- UU: Contamination protection accessory symbol (*1)
- C1: Radial clearance symbol (*2) Normal (No symbol) Light preload (C1) Medium preload (C0)
- +1240L: LM rail length (in mm)
- P: Accuracy symbol (*3) Normal grade (No Symbol)/High accuracy grade (H) Precision grade (P)/Super precision grade (SP) Ultra precision grade (UP)
- T: Symbol for LM rail jointed use
- -Ⅱ: Symbol for No. of rails used on the same plane (*4)

(*1) See contamination protection accessory on A1-494. (*2) See A1-71. (*3) See A1-76. (*4) See A1-13.

Note) This model number indicates that a single-rail unit constitutes one set. (i.e., required number of sets when 2 rails are used in parallel is 2 at a minimum.)

Download data by searching for the corresponding model number on the Technical Support site. https://tech.thk.com

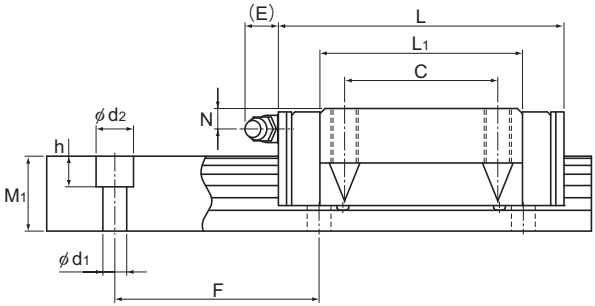

Unit: mm

	LM rail dimensions						Basic load rating		Static permissible moment kN-m*					Mass	
	Width		Height	Pitch		Length*	C	C_0	M_A		M_B		M_C	LM block	LM rail
	W_1 ±0.05	W_2	M_1	F	$d_1 \times d_2 \times h$	Max	kN	kN	1 block	Double blocks	1 block	Double blocks	1 block	kg	kg/m
	15	16	15	60	4.5×7.5×5.3	1240	10.9	15.7	0.0945	0.527	0.0945	0.527	0.0998	0.2	1.5
	20	21.5	18	60	6×9.5×8.5	1480	19.8 23.9	27.4 35.8	0.218 0.363	1.2 1.87	0.218 0.363	1.2 1.87	0.235 0.307	0.35 0.47	2.3
	23	23.5	22	60	7×11×9	1500	27.6 35.2	36.4 51.6	0.324 0.627	1.8 3.04	0.324 0.627	1.8 3.04	0.366 0.518	0.59 0.75	3.3
	28	31	26	80	9×14×12	1500	40.5 48.9	53.7 70.2	0.599 0.995	3.1 4.89	0.599 0.995	3.1 4.89	0.652 0.852	1.1 1.3	4.8
	34	33	29	80	9×14×12	1500	53.9 65	70.2 91.7	0.895 1.49	4.51 7.13	0.895 1.49	4.51 7.13	1.05 1.37	1.6 2	6.6

Note) The maximum length under "Length*" indicates the standard maximum length of an LM rail. (See A1-348.)
Static permissible moment*: 1 block: static permissible moment value with 1 LM block
Double blocks: static permissible moment value with 2 blocks closely contacting with each other

Options⇒A1-457

Models HSR-M1B and HSR-M1LB

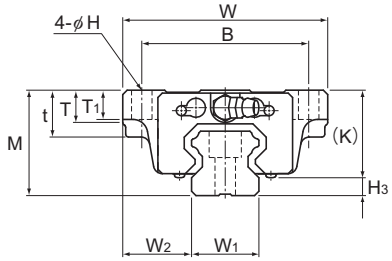

Models HSR15, 25 to 35M1B/M1LB

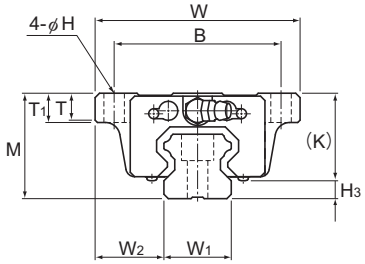

Models HSR20M1B/M1LB

Model No.	Outer dimensions			LM block dimensions											
	Height M	Width W	Length L	B	C	H	L_1	t	T	T_1	K	N	E	Grease nipple	H_3
HSR 15M1B	24	47	59.6	38	30	4.5	38.8	11	6.5	7	19.3	4.3	5.5	PB1021B	4.7
HSR 20M1B HSR 20M1LB	30	63	76 92	53	40	6	50.8 66.8	—	9.5	10	26	5	12	B-M6F	4
HSR 25M1B HSR 25M1LB	36	70	83.9 103	57	45	7	59.5 78.6	16	11	10	30.5	6	12	B-M6F	5.5
HSR 30M1B HSR 30M1LB	42	90	98.8 121.4	72	52	9	70.4 93	18	9	10	35	7	12	B-M6F	7
HSR 35M1B HSR 35M1LB	48	100	112 137.4	82	62	9	80.4 105.8	21	12	13	40.5	8	12	B-M6F	7.5

Note) The length L of the high temperature type LM Guide model HSR is longer than normal type of model HSR. (Dimension L_1 is the same.)

Model number coding

HSR20 M1 LB 2 UU C0 +1000L P T -Ⅱ

- HSR20: Model number
- M1: Type of LM block
- LB: Symbol for high temperature type LM Guide
- 2: No. of LM blocks used on the same rail
- UU: Contamination protection accessory symbol (*1)
- C0: Radial clearance symbol (*2) Normal (No symbol) Light preload (C1) Medium preload (C0)
- +1000L: LM rail length (in mm)
- P: Accuracy symbol (*3) Normal grade (No Symbol)/High accuracy grade (H) Precision grade (P)/Super precision grade (SP) Ultra precision grade (UP)
- T: Symbol for LM rail jointed use
- -Ⅱ: Symbol for No. of rails used on the same plane (*4)

(*1) See contamination protection accessory on A1-494. (*2) See A1-71. (*3) See A1-76. (*4) See A1-13.

Note) This model number indicates that a single-rail unit constitutes one set. (i.e., required number of sets when 2 rails are used in parallel is 2 at a minimum.)

Download data by searching for the corresponding model number on the Technical Support site. https://tech.thk.com

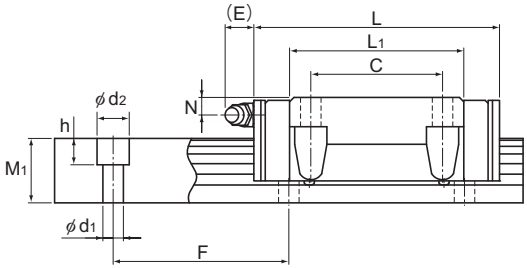

Unit: mm

	LM rail dimensions						Basic load rating		Static permissible moment kN-m*					Mass	
	Width		Height	Pitch		Length*	C	C_0	M_A		M_B		M_C	LM block	LM rail
	W_1 ±0.05	W_2	M_1	F	$d_1 \times d_2 \times h$	Max	kN	kN	1 block	Double blocks	1 block	Double blocks	1 block	kg	kg/m
	15	16	15	60	4.5×7.5×5.3	1240	10.9	15.7	0.0945	0.527	0.0945	0.527	0.0998	0.2	1.5
	20	21.5	18	60	6×9.5×8.5	1480	19.8 23.9	27.4 35.8	0.218 0.363	1.2 1.87	0.218 0.363	1.2 1.87	0.235 0.307	0.35 0.47	2.3
	23	23.5	22	60	7×11×9	1500	27.6 35.2	36.4 51.6	0.324 0.627	1.8 3.04	0.324 0.627	1.8 3.04	0.366 0.518	0.59 0.75	3.3
	28	31	26	80	9×14×12	1500	40.5 48.9	53.7 70.2	0.599 0.995	3.1 4.89	0.599 0.995	3.1 4.89	0.652 0.852	1.1 1.3	4.8
	34	33	29	80	9×14×12	1500	53.9 65	70.2 91.7	0.895 1.49	4.51 7.13	0.895 1.49	4.51 7.13	1.05 1.37	1.6 2	6.6

Note) The maximum length under "Length*" indicates the standard maximum length of an LM rail. (See A1-348.)
Static permissible moment*: 1 block: static permissible moment value with 1 LM block
Double blocks: static permissible moment value with 2 blocks closely contacting with each other

Options⇒A1-457

Models HSR-M1R and HSR-M1LR

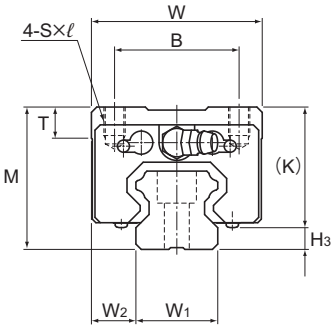

Model No.	Outer dimensions			LM block dimensions									
	Height M	Width W	Length L	B	C	S×ℓ	L_1	T	K	N	E	Grease nipple	H_3
HSR 15M1R	28	34	59.6	26	26	M4×5	38.8	6	23.3	8.3	5.5	PB1021B	4.7
HSR 20M1R HSR 20M1LR	30	44	76 92	32	36 50	M5×6	50.8 66.8	8	26	5	12	B-M6F	4
HSR 25M1R HSR 25M1LR	40	48	83.9 103	35	35 50	M6×8	59.5 78.6	8	34.5	10	12	B-M6F	5.5
HSR 30M1R HSR 30M1LR	45	60	98.8 121.4	40	40 60	M8×10	70.4 93	8	38	10	12	B-M6F	7
HSR 35M1R HSR 35M1LR	55	70	112 137.4	50	50 72	M8×12	80.4 105.8	10	47.5	15	12	B-M6F	7.5

Note) The length L of the high temperature type LM Guide model HSR is longer than normal type of model HSR. (Dimension L_1 is the same.)

Model number coding

HSR35 M1 R 2 UU C0 +1080L P T -Ⅱ

- HSR35: Model number
- M1: Symbol for high temperature type LM Guide
- R: Type of LM block
- 2: No. of LM blocks used on the same rail
- UU: Contamination protection accessory symbol (*1)
- C0: Radial clearance symbol (*2)
  Normal (No symbol)
  Light preload (C1)
  Medium preload (C0)
- +1080L: LM rail length (in mm)
- P: Accuracy symbol (*3)
  Normal grade (No Symbol)/High accuracy grade (H)
  Precision grade (P)/Super precision grade (SP)
  Ultra precision grade (UP)
- T: Symbol for LM rail jointed use
- -Ⅱ: Symbol for No. of rails used on the same plane (*4)

(*1) See contamination protection accessory on A1-494. (*2) See A1-71. (*3) See A1-76. (*4) See A1-13.

Note) This model number indicates that a single-rail unit constitutes one set. (i.e., required number of sets when 2 rails are used in parallel is 2 at a minimum.)

Download data by searching for the corresponding model number on the Technical Support site. https://tech.thk.com

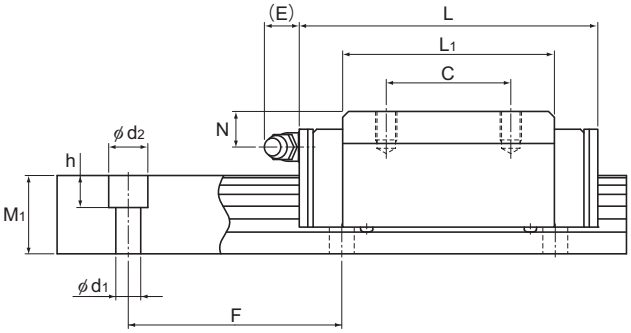

Unit: mm

	LM rail dimensions						Basic load rating		Static permissible moment kN-m*					Mass	
	Width		Height	Pitch		Length*	C	C_0	M_A		M_B		M_C	LM block	LM rail
	W_1 ±0.05	W_2	M_1	F	$d_1 \times d_2 \times h$	Max	kN	kN	1 block	Double blocks	1 block	Double blocks	1 block	kg	kg/m
	15	9.5	15	60	4.5×7.5×5.3	1240	10.9	15.7	0.0945	0.527	0.0945	0.527	0.0998	0.2	1.5
	20	12	18	60	6×9.5×8.5	1480	19.8 23.9	27.4 35.8	0.218 0.363	1.2 1.87	0.218 0.363	1.2 1.87	0.235 0.307	0.35 0.47	2.3
	23	12.5	22	60	7×11×9	1500	27.6 35.2	36.4 51.6	0.324 0.627	1.8 3.04	0.324 0.627	1.8 3.04	0.366 0.518	0.59 0.75	3.3
	28	16	26	80	9×14×12	1500	40.5 48.9	53.7 70.2	0.599 0.995	3.1 4.89	0.599 0.995	3.1 4.89	0.652 0.852	1.1 1.3	4.8
	34	18	29	80	9×14×12	1500	53.9 65	70.2 91.7	0.895 1.49	4.51 7.13	0.895 1.49	4.51 7.13	1.05 1.37	1.6 2	6.6

Note) The maximum length under "Length*" indicates the standard maximum length of an LM rail. (See A1-348.)
Static permissible moment*: 1 block: static permissible moment value with 1 LM block
Double blocks: static permissible moment value with 2 blocks closely contacting with each other

Options⇒A1-457

Model HSR-M1YR

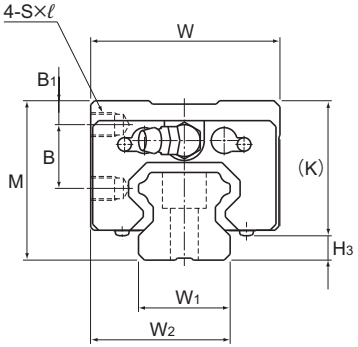

Model No.	Outer dimensions			LM block dimensions									
	Height M	Width W	Length L	B_1	B	C	S×ℓ	L_1	K	N	E	Grease nipple	H_3
HSR 15M1YR	28	33.5	59.6	4.3	11.5	18	M4×5	38.8	23.3	8.3	5.5	PB1021B	4.7
HSR 20M1YR	30	43.5	76	4	11.5	25	M5×6	50.8	26	5	12	B-M6F	4
HSR 25M1YR	40	47.5	83.9	6	16	30	M6×6	59.5	34.5	10	12	B-M6F	5.5
HSR 30M1YR	45	59.5	98.8	8	16	40	M6×9	70.4	38	10	12	B-M6F	7
HSR 35M1YR	55	69.5	112	8	23	43	M8×10	80.4	47.5	15	12	B-M6F	7.5

Note) The length L of the high temperature type LM Guide model HSR-YR is longer than normal type of model HSR-YR. (Dimension L_1 is the same.)

Model number coding

HSR25 M1 YR 2 UU C0 +1200L P T -Ⅱ

- HSR25: Model number
- M1: Symbol for high temperature type LM Guide
- YR: Type of LM block
- 2: No. of LM blocks used on the same rail
- UU: Contamination protection accessory symbol (*1)
- C0: Radial clearance symbol (*2) Normal (No symbol) Light preload (C1) Medium preload (C0)
- +1200L: LM rail length (in mm)
- P: Accuracy symbol (*3) Normal grade (No Symbol)/High accuracy grade (H) Precision grade (P)/Super precision grade (SP) Ultra precision grade (UP)
- T: Symbol for LM rail jointed use
- -Ⅱ: Symbol for No. of rails used on the same plane (*4)

(*1) See contamination protection accessory on A1-494. (*2) See A1-71. (*3) See A1-76. (*4) See A1-13.

Note) This model number indicates that a single-rail unit constitutes one set. (i.e., required number of sets when 2 rails are used in parallel is 2 at a minimum.)

Download data by searching for the corresponding model number on the Technical Support site. https://tech.thk.com

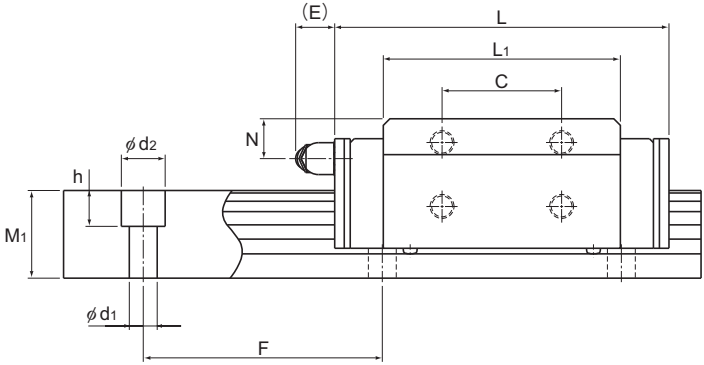

Unit: mm

	LM rail dimensions						Basic load rating		Static permissible moment kN-m*					Mass	
	Width		Height	Pitch		Length*	C	C_0	M_A		M_B		M_C	LM block	LM rail
	W_1 ±0.05	W_2	M_1	F	$d_1 \times d_2 \times h$	Max	kN	kN	1 block	Double blocks	1 block	Double blocks	1 block	kg	kg/m
	15	24	15	60	4.5×7.5×5.3	1240	10.9	15.7	0.0945	0.527	0.0945	0.527	0.0998	0.2	1.5
	20	31.5	18	60	6×9.5×8.5	1480	19.8	27.4	0.218	1.2	0.218	1.2	0.235	0.35	2.3
	23	35	22	60	7×11×9	1500	27.6	36.4	0.324	1.8	0.324	1.8	0.366	0.59	3.3
	28	43.5	26	80	9×14×12	1500	40.5	53.7	0.599	3.1	0.599	3.1	0.652	1.3	4.8
	34	51.5	29	80	9×14×12	1500	53.9	70.2	0.895	4.51	0.895	4.51	1.05	1.6	6.6

Note) The maximum length under "Length*" indicates the standard maximum length of an LM rail. (See A1-348.)
Static permissible moment*: 1 block: static permissible moment value with 1 LM block
Double blocks: static permissible moment value with 2 blocks closely contacting with each other

Options⇒A1-457

Standard Length and Maximum Length of the LM Rail

Table1 shows the standard lengths and the maximum lengths of model HSR-M1 variations. If the maximum length of the desired LM rail exceeds them, jointed rails will be used. Contact THK for details.
For the G dimension when a special length is required, we recommend selecting the corresponding G value from the table. The longer the G dimension is, the less stable the G area may become after installation, thus causing an adverse impact to accuracy.

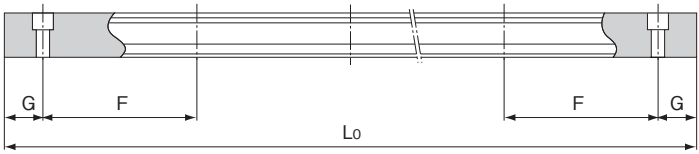

Table1 Standard Length and Maximum Length of the LM Rail for Model HSR-M1

Unit: mm

Model No.	HSR 15M1	HSR 20M1	HSR 25M1	HSR 30M1	HSR 35M1
LM rail standard length (L_o)	160 220 280 340 400 460 520 580 640 700 760 820 940 1000 1060 1120 1180 1240	220 280 340 400 460 520 580 640 700 760 820 940 1000 1060 1120 1180 1240 1360 1480	220 280 340 400 460 520 580 640 700 760 820 940 1000 1060 1120 1180 1240 1300 1360 1420 1480	280 360 440 520 600 680 760 840 920 1000 1080 1160 1240 1320 1400 1480	280 360 440 520 600 680 760 840 920 1000 1080 1160 1240 1320 1400 1480
Standard pitch F	60	60	60	80	80
G	20	20	20	20	20
Max length	1240	1480	1500	1500	1500

Note1) The maximum length varies with accuracy grades. Contact THK for details.
Note2) If jointed rails are not allowed and a greater length than the maximum values above is required, contact THK.
Note3) The values for HSR-M1 also apply to HSR-M1YR.

SR-M1

LM Guide High Temperature Type Model SR-M1

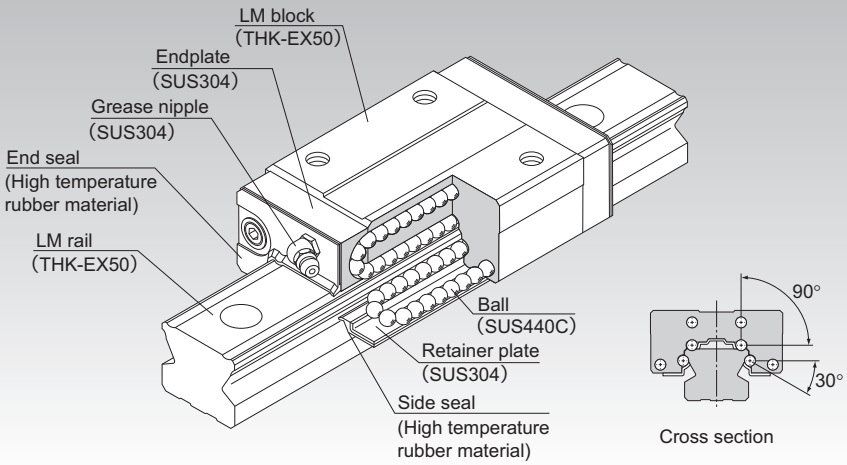

Point of Selection	**A1-10**
Point of Design	**A1-434**
Options	**A1-457**
Model No.	**A1-522**
Precautions on Use	**A1-528**
Accessories for Lubrication	**A24-1**
Mounting Procedure and Maintenance	**B1-89**
Equivalent moment factor	**A1-43**
Rated Loads in All Directions	**A1-58**
Equivalent factor in each direction	**A1-60**
Radial Clearance	**A1-71**
Accuracy Standards	**A1-76**
Shoulder Height of the Mounting Base and the Corner Radius	**A1-443**
Permissible Error of the Mounting Surface	**A1-450**
Dimensions of Each Model with an Option Attached	**A1-470**

Structure and Features

Balls roll in four rows of raceways precision-ground on an LM rail and an LM block, and endplates incorporated in the LM block allow the balls to circulate.
Since it is a compactly designed model that has a low sectional height and a ball contact structure rigid in the radial direction, this model is optimal for horizontal guide units.
High temperature type LM Guide model SR-M1 is capable of being used at service temperature up to 150℃ thanks to THK's unique technologies in material, heat treatment and lubrication.

[Maximum Service Temperature: 150℃]
Use of stainless steel in the endplates and high temperature rubber in the end seals achieves the maximum service temperature of 150℃.

[Dimensional Stability]
Since it is dimensionally stabilized, it demonstrates superb dimensional stability after being heated or cooled (note that it shows linear expansion at high temperature).

[Highly Corrosion Resistant]
Since the LM block, LM rail and balls use stainless steel, which is highly corrosion resistant, this model is optimal for clean room applications.

[High Temperature Grease]
This model uses high temperature grease that shows little grease-based fluctuation in rolling resistance even if temperature changes from low to high levels.

Thermal Characteristics of LM Rail and LM Block Materials

- Specific heat capacity: 0.481 J/(g•K)
- Thermal conductivity: 20.67 W/(m•K)
- Average coefficient of linear expansion: 11.8×10^{-6}/℃

Types and Features

Model SR-M1W

Specification Table⇒A1-354

With this type, the LM block has a smaller width (W) and tapped holes.

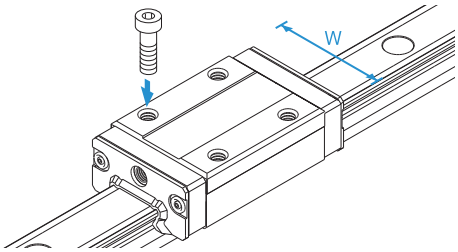

Model SR-M1V

Specification Table⇒A1-354

A space-saving type whose LM block has the same cross-sectional shape as model SR-M1W, but has a smaller overall LM block length (L).

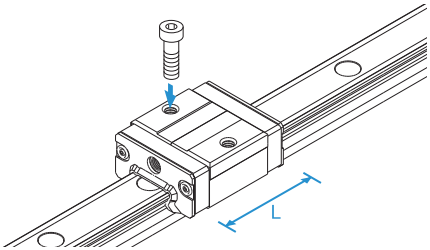

Model SR-M1TB

Specification Table⇒A1-356

The LM block has the same height as model SR-M1W and can be mounted from the bottom.

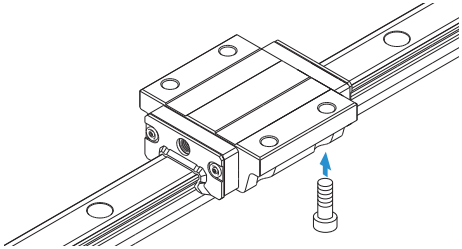

Model SR- M1SB

Specification Table⇒A1-356

A space-saving type whose LM block has the same sectional shape as model SR-M1TB, but has a smaller overall LM block length (L).

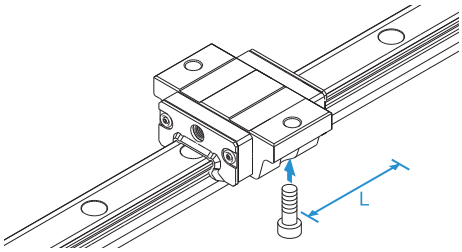

Service Life

When using this product in temperatures higher than 100°C, always multiply the basic dynamic load rating by the temperature coefficient when calculating the rated service life. See A1-64 for details.

Models SR-M1W and SR-M1V

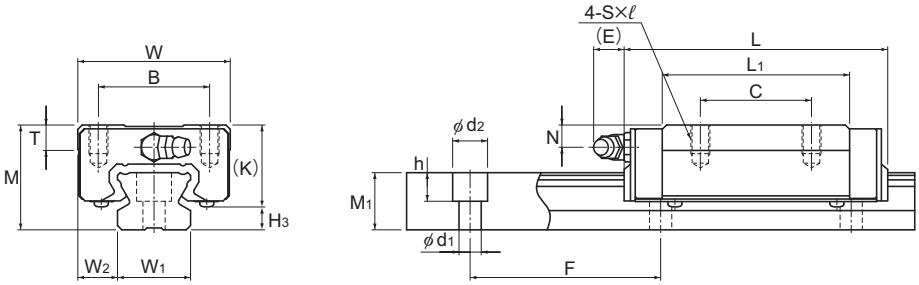

Model SR-M1W

Model No.	Outer dimensions			LM block dimensions									
	Height M	Width W	Length L	B	C	S×ℓ	L_1	T	K	N	E	Grease nipple	H_3
SR 15M1V SR 15M1W	24	34	40.4 57	26	— 26	M4×7	22.9 39.5	6	19.5	6	5.5	PB1021B	4.5
SR 20M1V SR 20M1W	28	42	47.3 66.2	32	— 32	M5×8	27.8 46.7	7.5	22	6	12	B-M6F	6
SR 25M1V SR 25M1W	33	48	59.2 83	35	— 35	M6×9	35.2 59	8	26	7	12	B-M6F	7
SR 30M1V SR 30M1W	42	60	67.9 96.8	40	— 40	M8×12	40.4 69.3	9	32.5	8	12	B-M6F	9.5
SR 35M1V SR 35M1W	48	70	77.6 111	50	— 50	M8×12	45.7 79	13	36.5	8.5	12	B-M6F	11.5

Model number coding

SR30 M1 W 2 UU C0 +1160L Y P T -Ⅱ

- SR30: Model number
- M1: Symbol for high temperature type LM Guide
- W: Type of LM block
- 2: No. of LM blocks used on the same rail
- UU: Contamination protection accessory symbol (*1)
- C0: Radial clearance symbol (*2) Normal (No symbol) Light preload (C1) Medium preload (C0)
- +1160L: LM rail length (in mm)
- Y: Applied to only 15 and 25
- P: Accuracy symbol (*3) Normal grade (No Symbol)/High accuracy grade (H) Precision grade (P)/Super precision grade (SP) Ultra precision grade (UP)
- T: Symbol for LM rail jointed use
- -Ⅱ: Symbol for No. of rails used on the same plane (*4)

(*1) See contamination protection accessory on A1-494. (*2) See A1-71. (*3) See A1-76. (*4) See A1-13.

Note) This model number indicates that a single-rail unit constitutes one set. (i.e., required number of sets when 2 rails are used in parallel is 2 at a minimum.)

Download data by searching for the corresponding model number on the Technical Support site. https://tech.thk.com

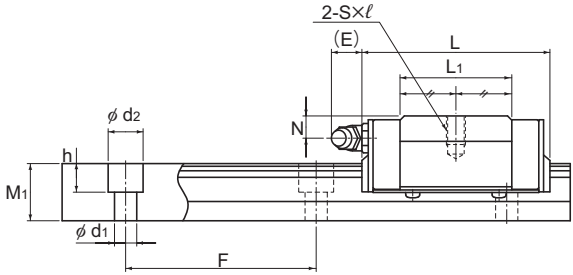

Model SR-M1V

Unit: mm

	LM rail dimensions						Basic load rating		Static permissible moment kN-m*					Mass	
	Width		Height	Pitch		Length*	C	C_0	M_A		M_B		M_C	LM block	LM rail
	W_1 ±0.05	W_2	M_1	F	$d_1 \times d_2 \times h$	Max	kN	kN	1 block	Double blocks	1 block	Double blocks	1 block	kg	kg/m
	15	9.5	12.5	60	3.5×6×4.5	1240	9.1 13.8	11.7 20.5	0.0344 0.0984	0.234 0.551	0.0215 0.0604	0.149 0.343	0.0694 0.122	0.12 0.2	1.2
	20	11	15.5	60	6×9.5×8.5	1500	13.4 19.2	17.2 28.6	0.064 0.167	0.396 0.887	0.0397 0.102	0.25 0.55	0.135 0.224	0.2 0.3	2.1
	23	12.5	18	60	7×11×9	1500	21.6 30.9	26.8 44.7	0.125 0.326	0.773 1.74	0.0774 0.2	0.488 1.08	0.245 0.408	0.3 0.4	2.7
	28	16	23	80	7×11×9	1500	29.5 45.6	34.4 64.4	0.173 0.564	1.15 2.92	0.108 0.346	0.735 1.8	0.376 0.703	0.5 0.8	4.3
	34	18	27.5	80	9×14×12	1500	40.9 60.4	46.7 81.8	0.275 0.785	1.79 4.27	0.171 0.482	1.14 2.65	0.615 1.08	0.8 1.2	6.4

Note1) The maximum length under "Length*" indicates the standard maximum length of an LM rail. (See A1-358.)
Static permissible moment*: 1 block: static permissible moment value with 1 LM block
Double blocks: static permissible moment value with 2 blocks closely contacting with each other

Note2) For models SR15 and 25, two types of rails with different mounting hole dimensions are offered (see Table1).
When, replacing this model with model SSR, pay attention to the mounting hole dimension of the LM rail.
Contact THK for details.

Table1 The dimension of the rail mounting hole

Model No.	Standard rail	Semi-Standard rail
SR 15	For M3 (No symbol)	For M4 (Symbol Y)
SR 25	For M6 (Symbol Y)	For M5 (No symbol)

Options⇒A1-457

Models SR-M1TB and SR-M1SB

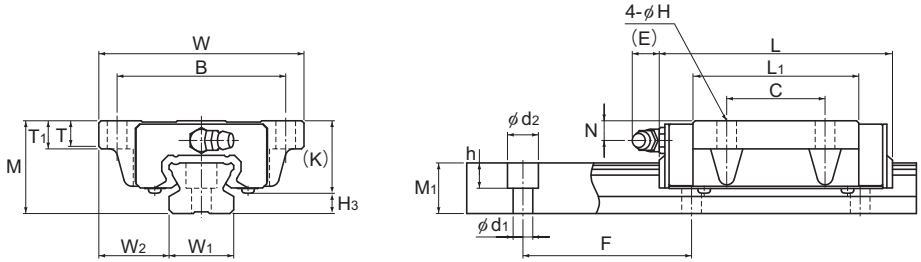

Model SR-M1TB

Model No.	Outer dimensions			LM block dimensions										
	Height M	Width W	Length L	B	C	H	L_1	T	T_1	K	N	E	Grease nipple	H_3
SR 15M1SB SR 15M1TB	24	52	40.4 57	41	— 26	4.5	22.9 39.5	6.1	7	19.5	6	5.5	PB1021B	4.5
SR 20M1SB SR 20M1TB	28	59	47.3 66.2	49	— 32	5.5	27.8 46.7	8	9	22	6	12	B-M6F	6
SR 25M1SB SR 25M1TB	33	73	59.2 83	60	— 35	7	35.2 59	9	10	26	7	12	B-M6F	7
SR 30M1SB SR 30M1TB	42	90	67.9 96.8	72	— 40	9	40.4 69.3	8.7	10	32.5	8	12	B-M6F	9.5
SR 35M1SB SR 35M1TB	48	100	77.6 111	82	— 50	9	45.7 79	11.2	13	36.5	8.5	12	B-M6F	11.5

Model number coding

SR30 M1 W 2 UU C0 +1000L Y P T -Ⅱ

- SR30: Model number
- M1: Symbol for high temperature type LM Guide
- W: Type of LM block
- 2: No. of LM blocks used on the same rail
- UU: Contamination protection accessory symbol (*1)
- C0: Radial clearance symbol (*2) Normal (No symbol) Light preload (C1) Medium preload (C0)
- +1000L: LM rail length (in mm)
- Y: Applied to only 15 and 25
- P: Accuracy symbol (*3) Normal grade (No Symbol)/High accuracy grade (H) Precision grade (P)/Super precision grade (SP) Ultra precision grade (UP)
- T: Symbol for LM rail jointed use
- -Ⅱ: Symbol for No. of rails used on the same plane (*4)

(*1) See contamination protection accessory on A1-494. (*2) See A1-71. (*3) See A1-76. (*4) See A1-13.

Note) This model number indicates that a single-rail unit constitutes one set. (i.e., required number of sets when 2 rails are used in parallel is 2 at a minimum.)

Download data by searching for the corresponding model number on the Technical Support site. https://tech.thk.com

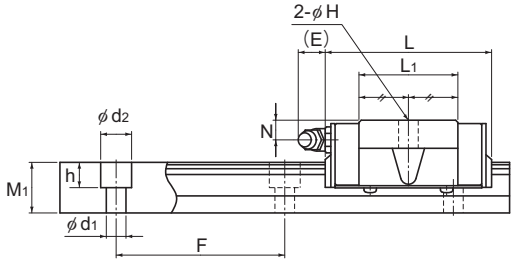

Model SR-M1SB

Unit: mm

	LM rail dimensions						Basic load rating		Static permissible moment kN-m*					Mass	
	Width		Height	Pitch		Length*	C	C_0	M_A		M_B		M_C	LM block	LM rail
	W_1 ±0.05	W_2	M_1	F	$d_1 \times d_2 \times h$	Max	kN	kN	1 block	Double blocks	1 block	Double blocks	1 block	kg	kg/m
	15	18.5	12.5	60	3.5×6×4.5	1240	9.1 13.8	11.7 20.5	0.0344 0.0984	0.234 0.551	0.0215 0.0604	0.149 0.343	0.0694 0.122	0.12 0.2	1.2
	20	19.5	15.5	60	6×9.5×8.5	1500	13.4 19.2	17.2 28.6	0.064 0.167	0.396 0.887	0.0397 0.102	0.25 0.55	0.135 0.224	0.2 0.3	2.1
	23	25	18	60	7×11×9	1500	21.6 30.9	26.8 44.7	0.125 0.326	0.773 1.74	0.0774 0.2	0.488 1.08	0.245 0.408	0.3 0.4	2.7
	28	31	23	80	7×11×9	1500	29.5 45.6	34.4 64.4	0.173 0.564	1.15 2.92	0.108 0.346	0.735 1.8	0.376 0.703	0.5 0.8	4.3
	34	33	27.5	80	9×14×12	1500	40.9 60.4	46.7 81.8	0.275 0.785	1.79 4.27	0.171 0.482	1.14 2.65	0.615 1.08	0.8 1.2	6.4

Note1) The maximum length under "Length*" indicates the standard maximum length of an LM rail. (See A1-358.)
Static permissible moment*: 1 block: static permissible moment value with 1 LM block
Double blocks: static permissible moment value with 2 blocks closely contacting with each other

Note2) For models SR15 and 25, two types of rails with different mounting hole dimensions are offered (see Table1).
When, replacing this model with model SSR, pay attention to the mounting hole dimension of the LM rail.
Contact THK for details.

Table1 The dimension of the rail mounting hole

Model No.	Standard rail	Semi-Standard rail
SR 15	For M3 (No symbol)	For M4 (Symbol Y)
SR 25	For M6 (Symbol Y)	For M5 (No symbol)

Options⇒A1-457

Standard Length and Maximum Length of the LM Rail

Table1 shows the standard lengths and the maximum lengths of model SR-M1 variations. If the maximum length of the desired LM rail exceeds them, jointed rails will be used. Contact THK for details.
For the G dimension when a special length is required, we recommend selecting the corresponding G value from the table. The longer the G dimension is, the less stable the G area may become after installation, thus causing an adverse impact to accuracy.

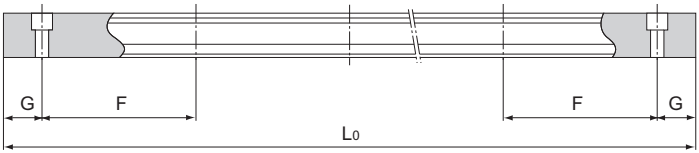

Table1 Standard Length and Maximum Length of the LM Rail for Model SR-M1

Unit: mm

Model No.	SR 15M1	SR 20M1	SR 25M1	SR 30M1	SR 35M1
LM rail standard length (L_o)	160 220 280 340 400 460 520 580 640 700 760 820 940 1000 1060 1120 1180 1240	220 280 340 400 460 520 580 640 700 760 820 940 1000 1060 1120 1180 1240 1300 1360 1420	220 280 340 400 460 520 580 640 700 760 820 940 1000 1060 1120 1240 1300 1360 1420 1480	280 360 440 520 600 680 760 840 920 1000 1080 1160 1240 1320 1400 1480	280 360 440 520 600 680 760 840 920 1000 1080 1160 1240 1320 1400 1480
Standard pitch F	60	60	60	80	80
G	20	20	20	20	20
Max length	1240	1500	1500	1500	1500

Note1) The maximum length varies with accuracy grades. Contact THK for details.
Note2) If jointed rails are not allowed and a greater length than the maximum values above is required, contact THK.

RSR-M1

LM Guide High Temperature Type Model RSR-M1

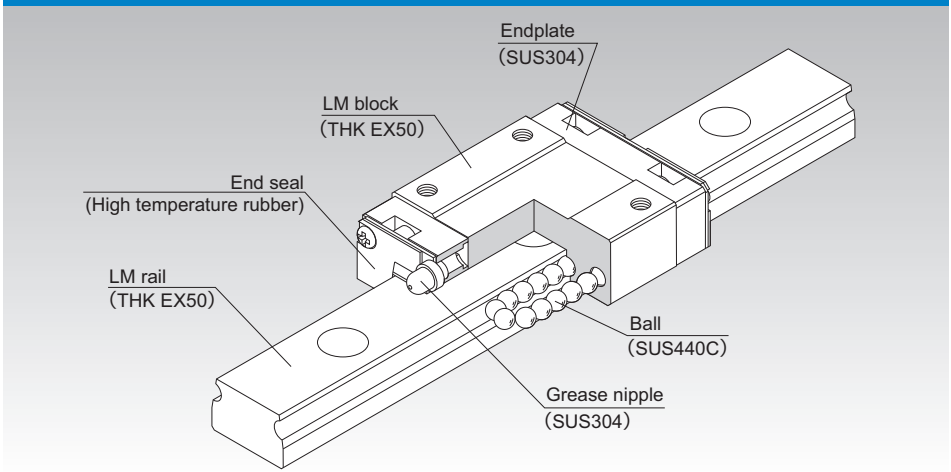

Point of Selection A1-10

Point of Design A1-434

Options A1-457

Model No. A1-522

Precautions on Use A1-528

Accessories for Lubrication A24-1

Mounting Procedure and Maintenance B1-89

Equivalent moment factor A1-43

Rated Loads in All Directions A1-58

Equivalent factor in each direction A1-60

Radial Clearance A1-71

Accuracy Standards A1-82

Shoulder Height of the Mounting Base and the Corner Radius A1-449

Permissible Error of the Mounting Surface A1-451

Flatness of the Mounting Surface A1-452

Dimensions of Each Model with an Option Attached A1-470

Structure and Features

Balls roll in two rows of raceways precision-ground on an LM rail and an LM block, and endplates incorporated in the LM block allow the balls to circulate.
High temperature type miniature LM Guide model RSR-M1 is capable of being used at service temperature up to 150℃ thanks to THK's unique technologies in material, heat treatment and lubrication.

[Maximum Service Temperature: 150℃]
Use of stainless steel in the endplates and high temperature rubber in the end seals achieves the maximum service temperature of 150℃.

[Dimensional Stability]
Since it is dimensionally stabilized, it demonstrates superb dimensional stability after being heated or cooled (note that it shows linear expansion at high temperature).

[Highly Corrosion Resistant]
Since the LM block, LM rail and balls use stainless steel, which is highly corrosion resistant, this model is optimal for clean room applications.

[High Temperature Grease]
This model uses high temperature grease that shows little grease-based fluctuation in rolling resistance even if temperature changes from low to high levels.

Thermal Characteristics of LM Rail and LM Block Materials

- Specific heat capacity: 0.481 J/(g•K)
- Thermal conductivity: 20.67 W/(m•K)
- Average coefficient of linear expansion: 11.8×10^{-6}/℃

Types and Features

Models RSR-M1, RSR-M1K, M1V

Specification Table⇒A1-364

This model is a standard type.

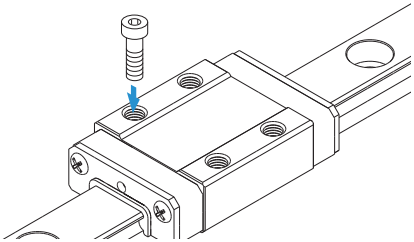

Model RSR-M1N

Specification Table⇒A1-364

It has a longer overall LM block length (L) and a greater rated load than standard types.

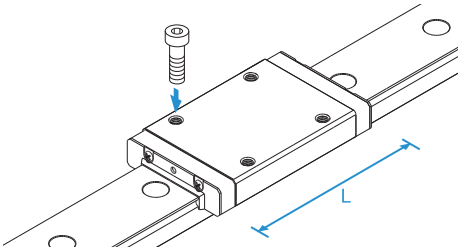

Models RSR-M1W, M1WV

Specification Table⇒A1-366

These models have greater overall LM block lengths (L), broader widths (W) and greater rated loads and permissible moments than standard types.

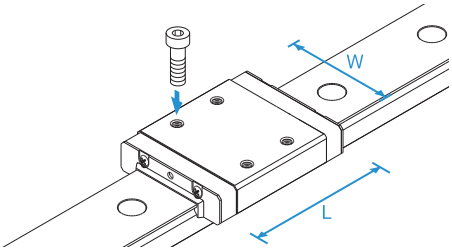

Model RSR-M1WN

Specification Table⇒A1-366

It has a longer overall LM block length (L), a greater rated load than standard types. Achieves the greatest load capacity among the high temperature type miniature LM Guide models.

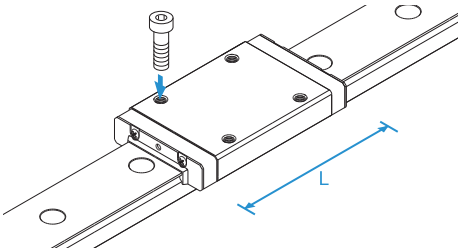

Service Life

When using this product in temperatures higher than 100°C, always multiply the basic dynamic load rating by the temperature coefficient when calculating the rated service life. See A1-64 for details.

Models RSR-M1K, RSR-M1V and RSR-M1N

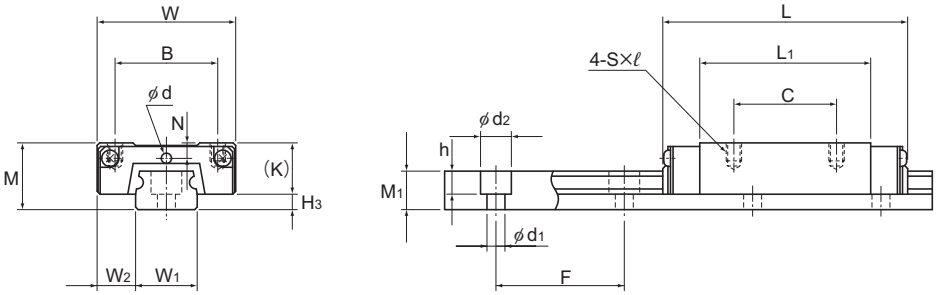

Models RSR9M1K/9M1N and RSR12M1V/M1N

Model No.	Outer dimensions			LM block dimensions										
	Height M	Width W	Length L	B	C	S×ℓ	L_1	T	K	N	E	Greasing hole d	Grease nipple	H_3
RSR 9M1K RSR 9M1N	10	20	30.8 41	15	10 16	M3×3	19.8 29.8	—	7.8	—	—	—	—	2.2
RSR 12M1V RSR 12M1N	13	27	35 47.7	20	15 20	M3×3.5	20.6 33.3	—	10	3	—	2	—	3
RSR 15M1V RSR 15M1N	16	32	43 61	25	20 25	M3×4	25.7 43.5	—	12	3.5	3.6 3.7	—	PB107	4
RSR 20M1V RSR 20M1N	25	46	66.5 86.3	38	38	M4×6	45.2 65	5.7	17.5	5	6.4	—	A-M6F	7.5

Model number coding

2 RSR15 M1 V UU C1 +230L P T -Ⅱ

- 2: No. of LM blocks used on the same rail
- RSR15 M1: Model number
- V: Type of LM block (Symbol for high temperature type LM Guide)
- UU: Contamination protection accessory symbol (*1)
- C1: Radial clearance symbol (*2) Normal (No symbol) Light preload (C1)
- +230L: LM rail length (in mm)
- P: Accuracy symbol (*3) Normal grade (No Symbol)/High accuracy grade (H) Precision grade (P)
- T: Symbol for LM rail jointed use
- -Ⅱ: Symbol for No. of rails used on the same plane (*4)

(*1) See contamination protection accessory on A1-494. (*2) See A1-71. (*3) See A1-82. (*4) See A1-13.

Note) This model number indicates that a single-rail unit constitutes one set. (i.e., required number of sets when 2 rails are used in parallel is 2 at a minimum.)

Download data by searching for the corresponding model number on the Technical Support site. https://tech.thk.com

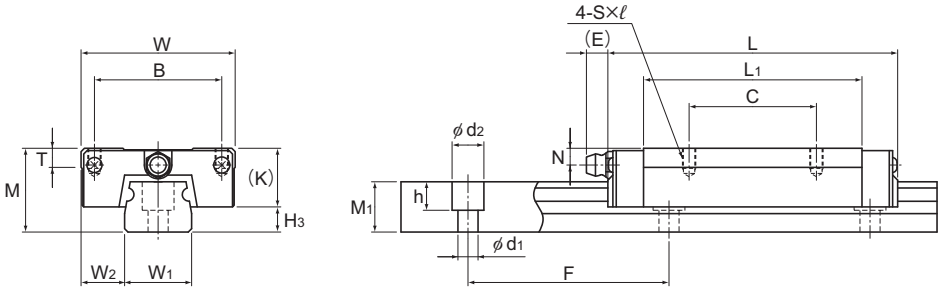

Models RSR15 and 20M1V/M1N

Unit: mm

	LM rail dimensions						Basic load rating		Static permissible moment N-m*					Mass	
	Width		Height	Pitch		Length*	C	C_0	M_A		M_B		M_C	LM block	LM rail
	W_1	W_2	M_1	F	$d_1 \times d_2 \times h$	Max	kN	kN	1 block	Double blocks	1 block	Double blocks	1 block	kg	kg/m
	9 $^{0}_{-0.02}$	5.5	5.5	20	3.5×6×3.3	1240	1.47 2.6	2.25 3.96	7.34 18.4	43.3 97	7.34 18.4	43.3 97	10.4 18.4	0.018 0.027	0.32
	12 $^{0}_{-0.025}$	7.5	7.5	25	3.5×6×4.5	1430	2.65 4.3	4.02 6.65	11.4 28.9	74.9 163	10.1 25.5	67.7 145	19.2 31.8	0.037 0.055	0.58
	15 $^{0}_{-0.025}$	8.5	9.5	40	3.5×6×4.5	1600	4.41 7.16	6.57 10.7	23.7 63.1	149 330	21.1 55.6	135 293	38.8 63	0.069 0.093	0.925
	20 $^{0}_{-0.03}$	13	15	60	6×9.5×8.5	1800	8.82 14.2	12.7 20.6	75.4 171	435 897	66.7 151	389 795	96.6 157	0.245 0.337	1.95

Note) The maximum length under "Length*" indicates the standard maximum length of an LM rail. (See A1-368.)
Static permissible moment*: 1 block: static permissible moment value with 1 LM block
Double blocks: static permissible moment value with 2 blocks closely contacting with each other

Options⇒A1-457

Models RSR-M1WV and RSR-M1WN

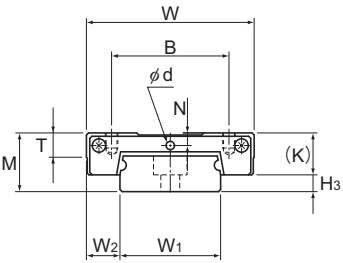

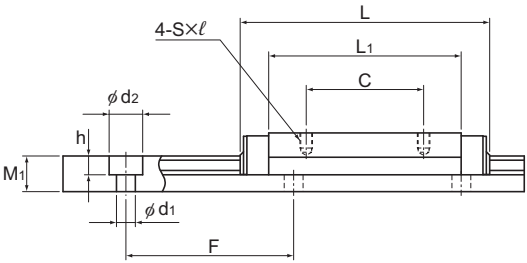

Models RSR9 and 12M1WV/M1WN

Model No.	Outer dimensions			LM block dimensions										
	Height M	Width W	Length L	B	C	S×ℓ	L_1	T	K	N	E	Greasing hole d	Grease nipple	H_3
RSR 9M1WV RSR 9M1WN	12	30	39 50.7	21 23	12 24	M2.6×3 M3×3	27 38.7	—	7.8	2	—	1.6	—	4.2
RSR 12M1WV RSR 12M1WN	14	40	44.5 59.5	28	15 28	M3×3.5	30.9 45.9	4.5	10	3	—	2	—	4
RSR 15M1WV RSR 15M1WN	16	60	55.5 74.5	45	20 35	M4×4.5	38.9 57.9	5.6	12	3.5	3	—	PB107	4

Model number coding

2 RSR12 M1 WN UU C1 +310L P T

- 2: No. of LM blocks used on the same rail
- RSR12: Model number
- M1: Symbol for high temperature type LM Guide
- WN: Type of LM block
- UU: Contamination protection accessory symbol (*1)
- C1: Radial clearance symbol (*2) Normal (No symbol) Light preload (C1)
- +310L: LM rail length (in mm)
- P: Accuracy symbol (*3) Normal grade (No Symbol)/High accuracy grade (H) Precision grade (P)
- T: Symbol for LM rail jointed use

(*1) See contamination protection accessory on A1-494. (*2) See A1-71. (*3) See A1-82.

Download data by searching for the corresponding model number on the Technical Support site. https://tech.thk.com

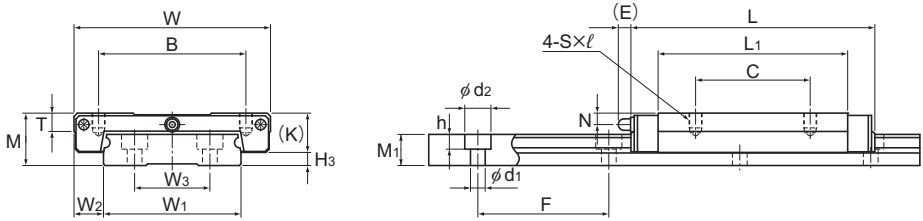

Models RSR15M1WV/M1WN

Unit: mm

	LM rail dimensions							Basic load rating		Static permissible moment N-m*					Mass	
	Width			Height	Pitch		Length*	C	C_0	M_A		M_B		M_C	LM block	LM rail
	W_1	W_2	W_3	M_1	F	$d_1 \times d_2 \times h$	Max	kN	kN	1 block	Double blocks	1 block	Double blocks	1 block	kg	kg/m
	18 $^{0}_{-0.05}$	6	—	7.5	30	3.5×6×4.5	1430	2.45 3.52	3.92 5.37	16 31	92.9 161	16 31	92.9 161	36 49.4	0.035 0.051	1.08
	24 $^{0}_{-0.05}$	8	—	8.5	40	4.5×8×4.5	1600	4.02 5.96	6.08 9.21	24.5 53.9	138 274	21.7 47.3	123 242	59.5 90.1	0.075 0.101	1.5
	42 $^{0}_{-0.05}$	9	23	9.5	40	4.5×8×4.5	1800	6.66 9.91	9.8 14.9	50.3 110	278 555	44.4 97.3	248 490	168 255	0.17 0.21	3

Note) The maximum length under "Length*" indicates the standard maximum length of an LM rail. (See A1-368.)
Static permissible moment*: 1 block: static permissible moment value with 1 LM block
Double blocks: static permissible moment value with 2 blocks closely contacting with each other

Options⇒A1-457

Standard Length and Maximum Length of the LM Rail

Table1 shows the standard and maximum lengths of the RSR M1 model rail.

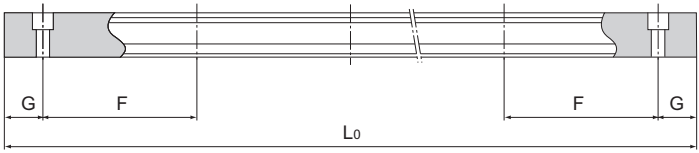

Table1 Standard Length and Maximum Length of the LM Rail for Model RSR-M1

Unit: mm

Model No.	RSR 9M1	RSR 12M1	RSR 15M1	RSR 20M1	RSR 9M1W	RSR 12M1W	RSR 15M1W
LM rail standard length (L_0)	55 75 95 115 135 155 175 195 275 375	70 95 120 145 170 195 220 245 270 320 370 470 570	70 110 150 190 230 270 310 350 390 430 470 550 670 870	220 280 340 460 640 880 1000	50 80 110 140 170 200 260 290 320	70 110 150 190 230 270 310 390 470 550	110 150 190 230 270 310 430 550 670 790
Standard pitch F	20	25	40	60	30	40	40
G	7.5	10	15	20	10	15	15
Max length	1240	1430	1600	1800	1430	1600	1800

Note) The maximum length varies with accuracy grades. Contact THK for details.

Prevention of LM block from falling off of LM rail

In models RSR-M1/RSR-M1W, the balls fall out if the LM block comes off the LM rail.
For this reason, LM Guide assemblies are delivered with a part which prevents the LM block from coming off the rail. If you remove this part when using the product, please take precautions to avoid overrunning the blocks off of the rail.

HSR-M2

LM Guide High Corrosion Resistance Type Model HSR-M2

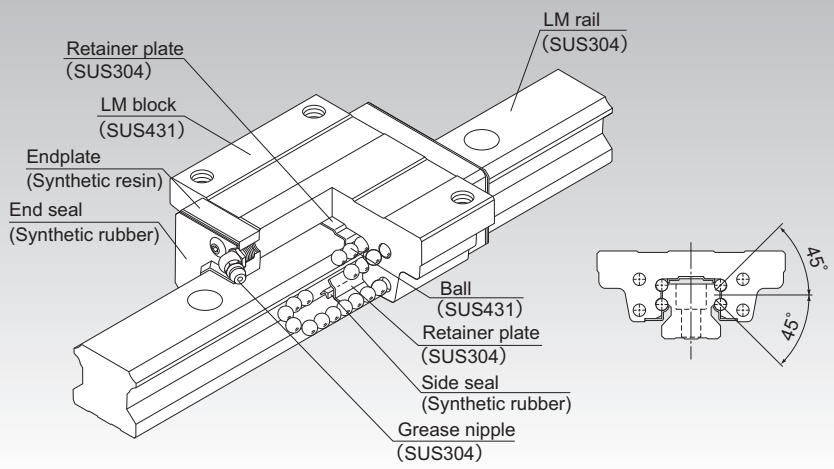

Point of Selection	**A1-10**
Point of Design	**A1-434**
Options	**A1-457**
Model No.	**A1-522**
Precautions on Use	**A1-528**
Accessories for Lubrication	**A24-1**
Mounting Procedure and Maintenance	**B1-89**
Equivalent moment factor	**A1-43**
Rated Loads in All Directions	**A1-58**
Equivalent factor in each direction	**A1-60**
Radial Clearance	**A1-72**
Accuracy Standards	**A1-76**
Shoulder Height of the Mounting Base and the Corner Radius	**A1-445**
Permissible Error of the Mounting Surface	**A1-450**
Dimensions of Each Model with an Option Attached	**A1-470**

Structure and Features

Balls roll in four rows of raceways precision-ground on an LM rail and an LM block, and endplates incorporated in the LM block allow the balls to circulate.
Each row of balls is placed at a contact angle of 45° so that the rated loads applied to the LM block are uniform in the four directions (radial, reverse radial and lateral directions), enabling the LM Guide to be used in all orientations.
The LM rail, LM block and balls are made of highly corrosion resistant stainless steel and the other metal parts are made of stainless steel, allowing superb corrosion resistance to be achieved. As a result, the need for surface treatment is eliminated.

Types and Features

Model HSR-M2A

Specification Table⇒A1-372

The flange of its LM block has tapped holes.

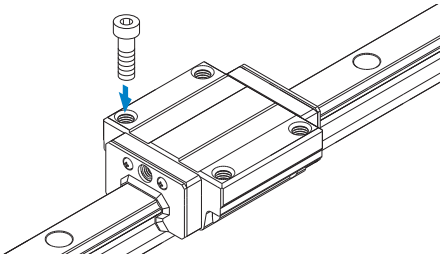

Model HSR-M2A

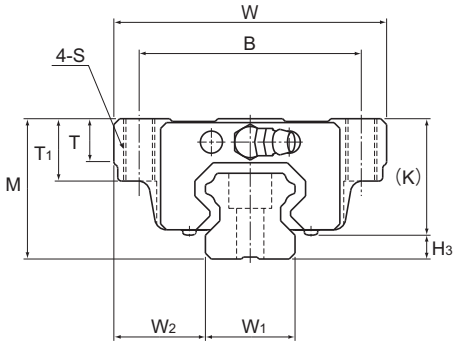

Model No.	Outer dimensions			LM block dimensions										
	Height M	Width W	Length L	B	C	S	L_1	T	T_1	K	N	E	Grease nipple	H_3
HSR 15M2A	24	47	56.6	38	30	M5	38.8	6.5	11	19.3	4.3	5.5	PB1021B	4.7
HSR 20M2A	30	63	74	53	40	M6	50.8	9.5	10	26	5	12	B-M6F	4
HSR 25M2A	36	70	83.1	57	45	M8	59.5	11	16	30.5	6	12	B-M6F	5.5

Note) For the high corrosion resistance type LM Guide, a stainless steel end plate is optionally available. (symbol···I)

Model number coding

HSR20M2 A 2 UU C1 I +820L P T -II

- HSR20M2: Model number (high corrosion resistance type LM Guide)
- A: Type of LM block
- 2: No. of LM blocks used on the same rail
- UU: Contamination protection accessory symbol (*1)
- C1: Radial clearance symbol (*2) Normal (No symbol) Light preload (C1)
- I: End plate is made of stainless steel
- +820L: LM rail length (in mm)
- P: Accuracy symbol (*3) Normal grade (No Symbol)/High accuracy grade (H) Precision grade (P)/Super precision grade (SP) Ultra precision grade (UP)
- T: Symbol for LM rail jointed use
- -II: Symbol for No. of rails used on the same plane (*4)

(*1) See contamination protection accessory on A1-494. (*2) See A1-72. (*3) See A1-76. (*4) See A1-13.

Note) This model number indicates that a single-rail unit constitutes one set. (i.e., required number of sets when 2 rails are used in parallel is 2 at a minimum.)

Download data by searching for the corresponding model number on the Technical Support site. https://tech.thk.com

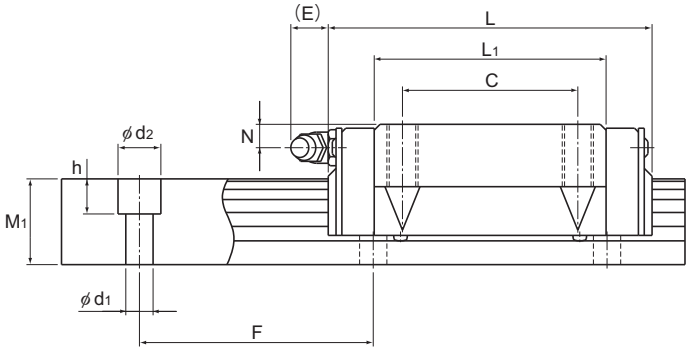

Unit: mm

	LM rail dimensions						Basic load rating		Static permissible moment N-m*					Mass	
	Width		Height	Pitch		Length*	C	C_0	M_A		M_B		M_C	LM block	LM rail
	W_1 ±0.05	W_2	M_1	F	$d_1 \times d_2 \times h$	Max	kN	kN	1 block	Double blocks	1 block	Double blocks	1 block	kg	kg/m
	15	16	15	60	4.5×7.5×5.3	1000	2.33	2.03	12.3	70.3	12.3	70.3	10.8	0.2	1.5
	20	21.5	18	60	6×9.5×8.5	1000	3.86	3.57	29	160	29	160	26.5	0.35	2.3
	23	23.5	22	60	7×11×9	1000	5.57	5.16	46.9	261	46.9	261	45.1	0.59	3.3

Note) The maximum length under "Length*" indicates the standard maximum length of an LM rail. (See A1-374.)
The basic load rating of the high corrosion resistance type LM Guide is smaller than ordinary stainless steel LM Guides.
Static permissible moment*: 1 block: static permissible moment value with 1 LM block
Double blocks: static permissible moment value with 2 blocks closely contacting with each other

Options⇒A1-457

Standard Length and Maximum Length of the LM Rail

Table1 shows the standard lengths and the maximum lengths of model HSR-M2 variations. If the maximum length of the desired LM rail exceeds them, jointed rails will be used. Contact THK for details.
For the G dimension when a special length is required, we recommend selecting the corresponding G value from the table. The longer the G dimension is, the less stable the G area may become after installation, thus causing an adverse impact to accuracy.

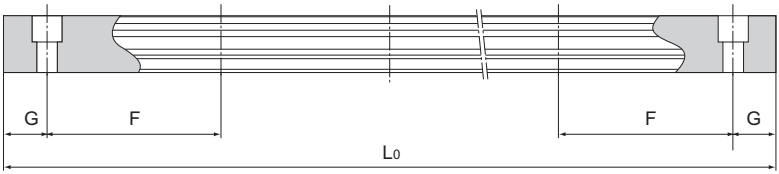

Table1 Standard Length and Maximum Length of the LM Rail for Model HSR-M2

Unit: mm

Model No.	HSR 15M2	HSR 20M2	HSR 25M2
LM rail standard length (L_0)	160 280 460 640	280 460 640 820	280 460 640 820 1000
Standard pitch F	60	60	60
G	20	20	20
Max length	1000	1000	1000

Note1) The maximum length varies with accuracy grades. Contact THK for details.
Note2) If jointed rails are not allowed and a greater length than the maximum values above is required, contact THK.

HSR-M1VV

LM Guide Medium-to-low Vacuum Type Model HSR-M1VV

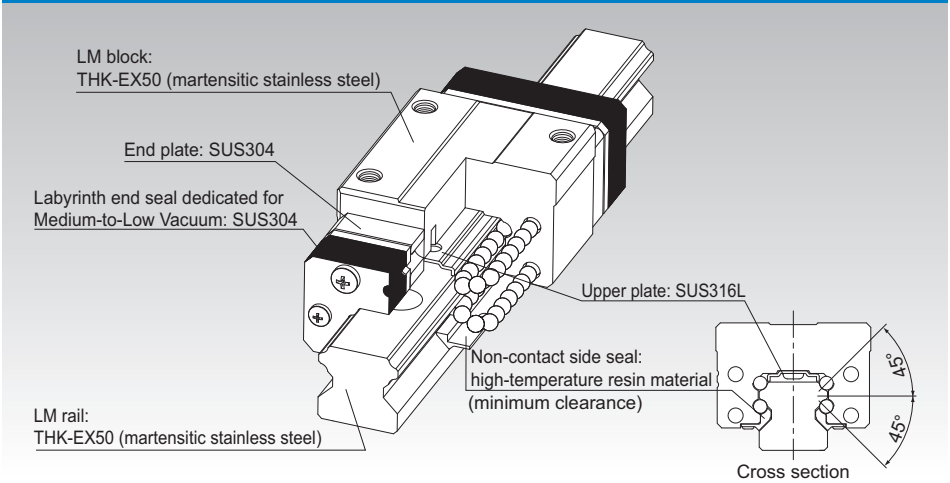

Point of Selection A1-10

Point of Design A1-434

Options A1-457

Model No. A1-522

Precautions on Use A1-530

Accessories for Lubrication A24-1

Mounting Procedure and Maintenance B1-89

Equivalent moment factor A1-43

Rated Loads in All Directions A1-58

Equivalent factor in each direction A1-60

Radial Clearance A1-71

Accuracy Standards A1-76

Shoulder Height of the Mounting Base and the Corner Radius A1-445

Permissible Error of the Mounting Surface A1-450

Flatness of the Mounting Surface A1-452

Dimensions of Each Model with an Option Attached A1-470

Structure and Features

[Features]

- Operable in various environments at pressure between atmospheric pressure and vacuum (10^{-3} [Pa]).
- Capable of withstanding baking temperature up to 200℃*
- Use of a newly developed labyrinth end seal dedicated for Medium-to-Low Vacuum increases grease retention and allows extended use in vacuum.
- Use of grease designed for Medium-to-Low Vacuum achieves a stable rolling resistance.

* If the baking temperature exceeds 100°C, multiply the basic load rating with the temperature coefficient.

Structure of the labyrinth end seal dedicated for Medium-to-Low Vacuum
The labyrinth end seal dedicated for Medium-to-Low Vacuum forms a multi-stage space as shown in the figure on the right to minimize the pressure difference between adjacent stages. This reduces the out-flow velocity of the oil inside the LM block to a minimum. In addition, the seal will not affect the rolling resistance since it does not contact the LM rail.

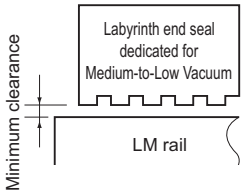

[Achievable vacuum level]

The LM Guide for Medium-to-Low Vacuum demonstrates an excellent achievable vacuum level.

[Test conditions] Temperature: 25℃ (±5℃)

	HSR15M1RVV	HSR15R (for reference)
Grease	Grease for Medium-to-Low Vacuum	AFB-LF Grease
Seal	Labyrinth end seal dedicated for Medium-to-Low Vacuum	None
Endplate	Stainless steel	Resin

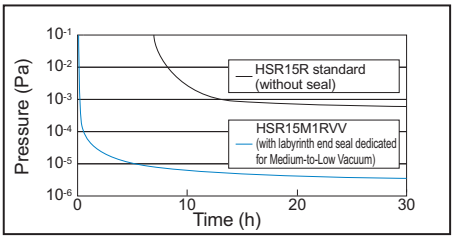

Achievable vacuum level

[Rolling resistance]

The grease used in the LM Guide for Medium-to-Low Vacuum has a smaller rolling resistance than conventional fluorine grease and ensures stable rolling motion.
Specimen: HSR15M1RVV
Temperature: 25℃ (±5℃)
Pressure: atmospheric pressure

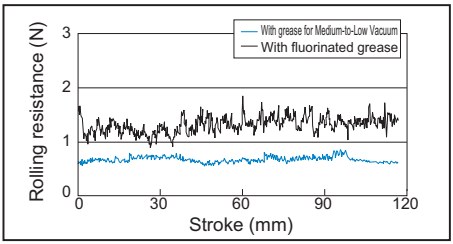

Rolling resistance fluctuation

Types and Features

Model HSR-M1RVV

Specification Table⇒A1-380

With this type, the LM block has a smaller width (W) and tapped holes. Used in places where the space for table width is limited.

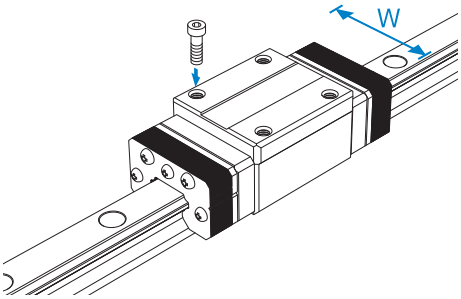

Precautions on Design

If a large moment is applied to a system consisting of one block on one axis, the labyrinth end seal may contact the rail, and it may affect the motion.
If a moment is applied, we recommend using two axes with two blocks per axis.
Contact THK for details.

Model HSR-M1VV

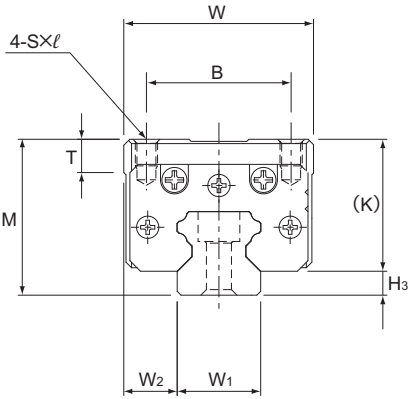

Model No.	Outer dimensions			LM block dimensions						
	Height M	Width W	Length L	B	C	S×ℓ	L_1	T	K	H_3
HSR15M1R-VV	28	34	75	26	26	M4×5	38.8	6	23.7	4.3

Model number coding

HSR15M1R 1 VV C1 +400L P -Ⅱ

- HSR15M1R: Model No.
- 1: No. of LM blocks used on the same rail
- VV: Labyrinth seal symbol (*2)
- C1: Radial clearance symbol (*1)
- +400L: LM rail length (in mm)
- P: Accuracy symbol (*3)
- -Ⅱ: Symbol for No. of rails used on the same plane (*4)

(*1) See A1-71. (*2) See A1-377. (*3) See A1-76. (*4) See A1-13.

Note1) The radial clearance, maximum LM rail length and accuracy class are equal to that of model HSR.
Note2) With this model, a single-rail unit constitutes one set (i.e., the required number of sets when 2 rails are used in parallel is 2).

Download data by searching for the corresponding model number on the Technical Support site. https://tech.thk.com

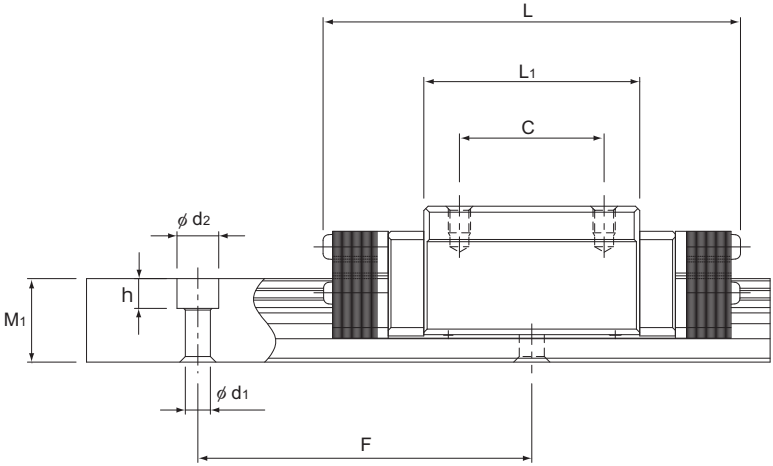

Unit: mm

	LM rail dimensions						Basic load rating		Static permissible moment kN-m*					Mass	
	Width		Height	Pitch		Length*	C	C_0	M_A		M_B		M_C	LM block	LM rail
	W_1 ±0.05	W_2	M_1	F	$d_1 \times d_2 \times h$	Max	kN	kN	1 block	Double blocks	1 block	Double blocks	1 block	kg	kg/m
	15	9.5	15	60	4.5×7.5×5.3	1240	10.9	15.7	0.0945	0.527	0.0945	0.527	0.0998	0.27	1.5

Note) The maximum length under "Length*" indicates the standard maximum length of an LM rail. (See A1-382.)
Static permissible moment*: 1 block: static permissible moment value with 1 LM block
Double blocks: static permissible moment value with 2 blocks closely contacting with each other
If a large moment is applied to a system consisting of one block on one axis, the labyrinth end seal may contact the rail, and it may affect the motion.
If a moment is applied, we recommend using two axes with two blocks per axis.
Contact THK for details.

Options⇒A1-457

Standard Length and Maximum Length of the LM Rail

Table1 shows the standard lengths and the maximum lengths of model HSR-M1VV variations. If the maximum length of the desired LM rail exceeds them, jointed rails will be used. Contact THK for details.
For the G dimension when a special length is required, we recommend selecting the corresponding G value from the table. The longer the G dimension is, the less stable the G area may become after installation, thus causing an adverse impact to accuracy.

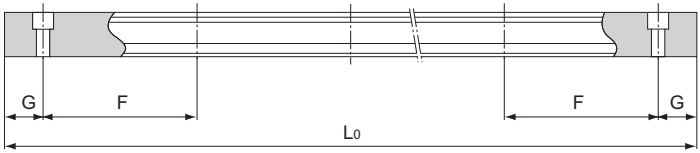

Table1 Standard Length and Maximum Length of the LM Rail for Model HSR-M1VV

Unit: mm

Model No.	HSR15M1R-VV
LM rail standard length (L_0)	160 220 280 340 400 460 520 580 640 700 760 820 940 1000 1060 1120 1180 1240
Standard pitch F	60
G	20
Max length	1240

Note1) The maximum length varies with accuracy grades. Contact THK for details.
Note2) If jointed rails are not allowed and a greater length than the maximum values above is required, contact THK.

SR-MS

LM Guide Oil-Free for Special Environments Model SR-MS

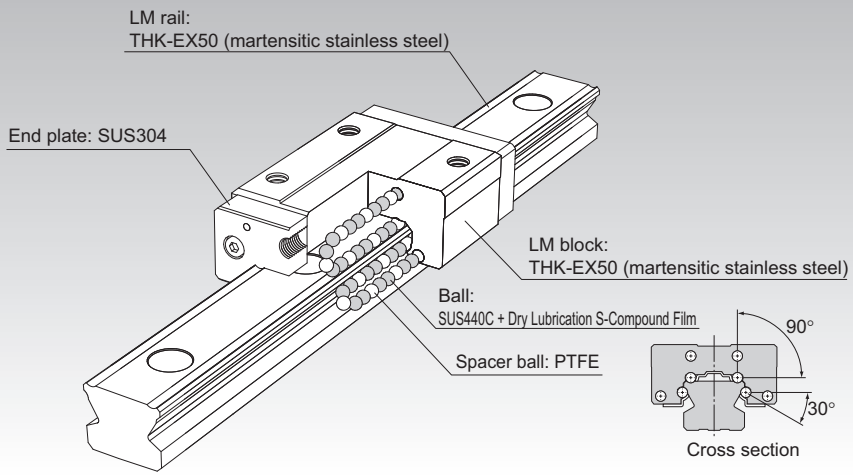

Point of Selection A1-10

Point of Design A1-434

Options A1-457

Model No. A1-522

Precautions on Use A1-530

Accessories for Lubrication A24-1

Mounting Procedure and Maintenance B1-89

Equivalent moment factor A1-43

Rated Loads in All Directions A1-58

Equivalent factor in each direction A1-60

Radial Clearance A1-72

Accuracy Standards A1-85

Shoulder Height of the Mounting Base and the Corner Radius A1-443

Permissible Error of the Mounting Surface A1-451

Flatness of the Mounting Surface A1-452

Dimensions of Each Model with an Option Attached A1-470

Structure and Features

[Structural Characteristics]

1. Uses stainless steel
   All components are composed of parts for special environments such as stainless steel.
2. Degreased and cleaned
   Special solvent is used to de-grease this model.
3. Does not use grease
   Use of highly reliable dry lubricant S-compound film for stainless steel balls achieves grease-free lubrication.

This achieves → Low outgassing → As a result...

Greatest advantage

Suitable for applications where the vacuum level reaches 10^{-6} Pa and chemical contamination (gaseous contamination such as organic matter and moisture) is not allowed.

* Can be used at temperature up to 150°C (instantaneously 200°C).

[What is Dry Lubrication S-Compound Film]

Dry Lubrication S-Compound Film is a fully dry lubricant developed for use under atmospheric to high-vacuum environments.
It has superior characteristics in load carrying capacity, wear resistance and sealability to other lubrication systems.

Comparison of dry lubrication material properties

Item	Friction coefficient (reference value)	Wear resistance	Hardness	Service environment
Molybdenum Disulfide (hexagonal form)	0.04	△	△	Vacuum
Soft metal	0.05 to 0.5	△	△	Atmosphere, vacuum
DLC (diamond like carbon)	0.08 to 0.15	△	○	Atmosphere, H_2O
Dry Lubrication S-Compound Film	0.02 to 0.05	○	○	Atmosphere, vacuum

[Low Friction]

The Oil-Free LM Guide for special environments exerts superbly low frictional properties in atmospheric to vacuum environments.

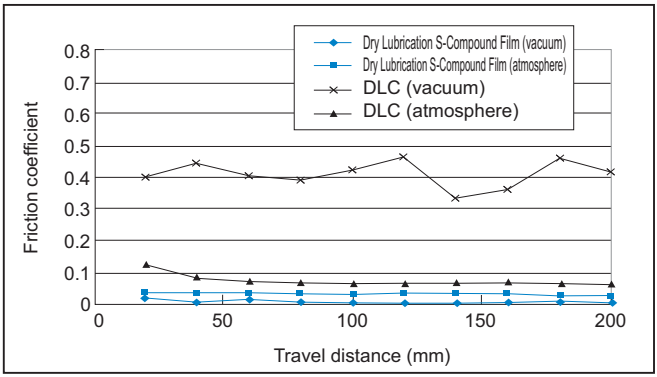

[Low Dust Generation]

The Oil-Free LM Guide for special environments exerts a lower level of dust generation than conventional vacuum grease lubricants.

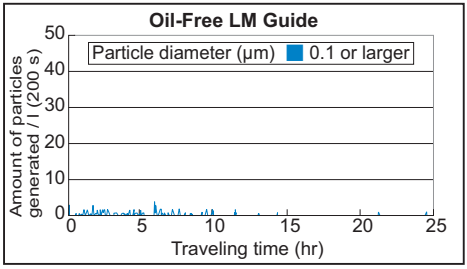

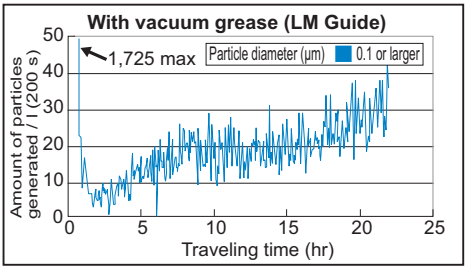

[Long service life]

The Oil-Free LM Guide for special environments has a longer service life than conventional dry lubrication.

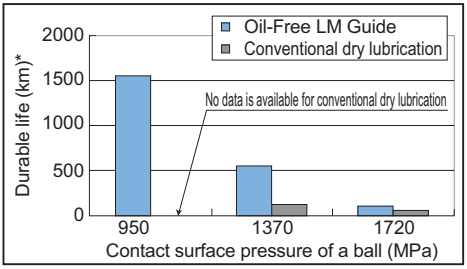

* The durable life represents the value at a point from which the Dry Lubrication S-Compound Film is no longer effective.Note that the durable life differs from the rated service life of the LM Guide.

[Applications of the Oil-Free LM Guide for Special Environments]

Industry	Equipment	Advantages of the oil-free LM Guide
Semiconductor / FPD manufacturing machine	Exposure machine, organic EL manufacturing machine, ion injection machine	● Little outgassing (water, organic matter) ● Low dust generation ● Operable at high temperature (up to 150℃)

Types and Features

Model SR-MSW

Specification Table⇒A1-388

With this type, the LM block has a smaller width (W) and tapped holes.

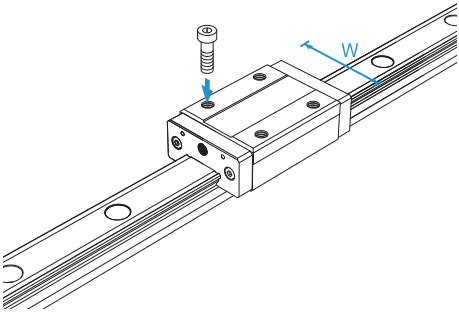

Model SR-MSV

Specification Table⇒A1-388

A space-saving type whose LM block has the same cross-sectional shape as model SR-MSW, but has a smaller overall LM block length (L).

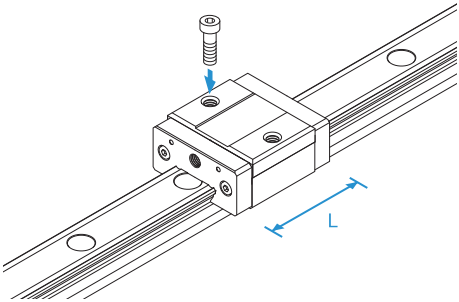

Models SR-MSV and SR-MSW

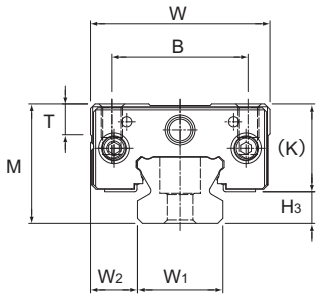

Model No.	Outer dimensions			LM block dimensions						
	Height M	Width W	Length L	B	C	S×ℓ	L_1	T	K	H_3
SR15MSV SR15MSW	24	34	36.6 53.2	26	— 26	M4×7	22.9 39.5	5.7	19.5	4.5
SR20MSV SR20MSW	28	42	41.3 60.2	32	— 32	M5×8	27.8 46.7	7.2	22	6

Model number coding

SR15MSV 1 CS + 340L Y P - Ⅱ

- SR15MSV: Model No.
- 1: No. of LM blocks used on the same rail
- CS: Radial clearance symbol (*1)
- 340L: LM rail length (mm)
- Y: Applied to only 15
- P: Accuracy symbol (*2)
- Ⅱ: Symbol for No. of rails used on the same plane (*3)

(*1) See A1-72. (*2) See A1-85. (*3) See A1-13.

Note) With this model, a single-rail unit constitutes one set (i.e., the required number of sets when 2 rails are used in parallel is 2).

Download data by searching for the corresponding model number on the Technical Support site. https://tech.thk.com

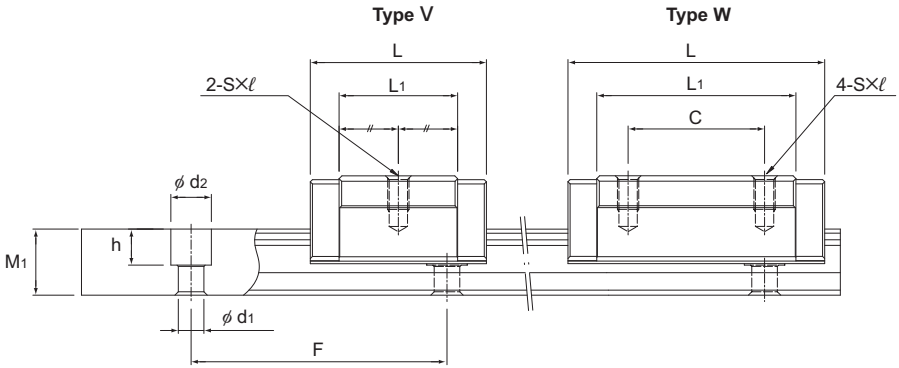

Unit: mm

	LM rail dimensions						Permis-sible load	Permissible moment N•m					Mass	
	Width		Height	Pitch		Length*	F_0	M_A		M_B		M_C	LM block	LM rail
	W_1 ±0.05	W_2	M_1	F	$d_1 \times d_2 \times h$	Max	N	1 block	Double blocks	1 block	Double blocks	1 block	kg	kg/m
	15	9.5	12.5	60	3.5×6×4.5	400	320 570	0.80 2.35	5.43 13.0	0.51 1.47	3.60 8.31	1.16 2.08	0.12 0.2	1.2
	20	11	15.5	60	6×9.5×8.5	400	430 750	1.35 3.76	8.44 19.9	0.87 2.36	5.52 12.6	2.05 3.59	0.2 0.3	2.1

Note1) The maximum length under "Length*" indicates the standard maximum length of an LM rail. (See A1-390 .)
For the durability of the Oil-Free LM Guide for special environment, contact THK.
The value of permissible load F0 represents the permissible value for the strength of the dry lubricant S-compound film. Since the service life of the S film may vary according to the environment or the operating conditions, be sure to evaluate and validate the life under the service conditions and operating conditions at the customer.
Note2) For model SR15, two types of rails with different mounting hole dimensions are offered (see Table1).
When, replacing this model with model SSR, pay attention to the mounting hole dimension of the LM rail.
Contact THK for details.

Table1 The dimension of the rail mounting hole

Model No.	Standard rail	Semi-Standard rail
SR 15	For M3 (No symbol)	For M4 (Symbol Y)

Options⇒A1-457

Standard Length and Maximum Length of the LM Rail

The following table shows the standard length and the maximum length of the LM rail of the Oil-Free LM Guide for special environments. If the overall rail length exceeds the maximum length, contact THK.
For dimension G if you require a special length, we recommend using the dimensions in the table. If dimension G is longer, the respective part tends to become unstable after installation, which may negatively affect the accuracy.

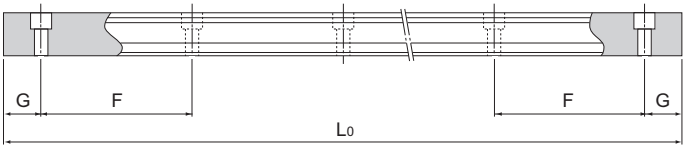

Table1 Standard Length and Maximum Length of the LM Rail for Model SR-MS

Unit: mm

Model No.	SR15MS	SR20MS
LM rail standard length (L_0)	160 220 280 340 400	220 280 340 400
Standard pitch F	60	60
G	20	20
Max length	400	400

Note1) If you desire a rail length larger than the maximum length, contact THK.
Note2) A connected-rail type is not available.

Structure and Features of the Caged Roller LM Guide

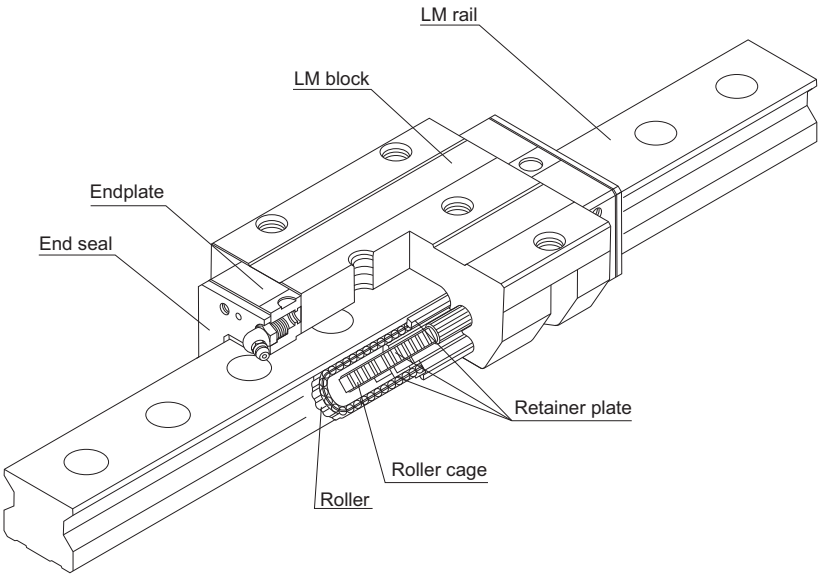

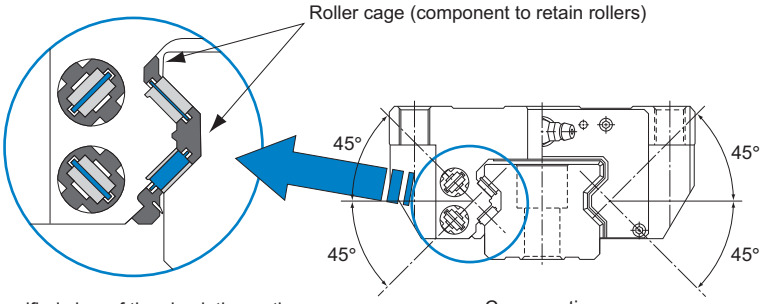

Fig.1 Structural Drawing of the Caged Roller LM Guide Model SRG

Caged Roller LM Guide is a roller guide that achieves low-friction, smooth motion and long-term maintenance-free operation by using a roller cage. In addition, to ensure ultra-high rigidity, rollers with low elastic deformation are used as the rolling elements and the roller diameter and the roller length are optimized.
Furthermore, the lines of rollers are placed at a contact angle of 45° so that the same rated load is applied in all (radial, reverse and lateral) directions.

Advantages of the Caged Roller Technology

(1) Evenly spaced and aligned rollers circulate, preventing the rollers from skewing, minimizing rolling resistance fluctuations and achieving smooth and stable motion.
(2) The absence of friction between rollers allows grease to be retained in grease pockets and achieves long-term maintenance-free operation.
(3) The absence of friction between rollers achieves low heat generation and superbly high speed.
(4) The absence of roller-to-roller collision ensures low noise and acceptable running sound.

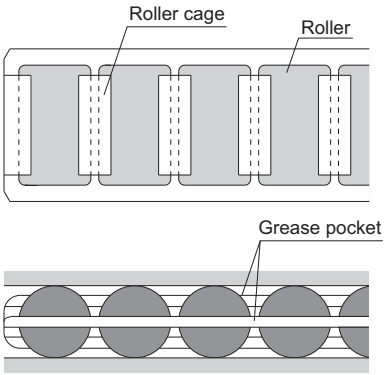

[Smooth Motion]

● **Rolling Resistance Data**

Evenly spaced and aligned rollers circulate, minimizing rolling resistance fluctuations and achieving smooth and stable motion.

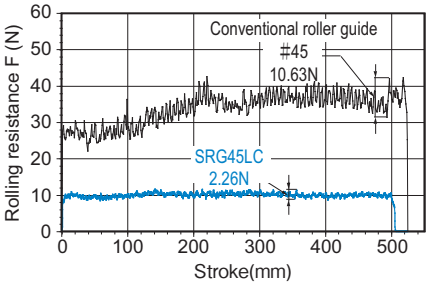

Result of Measuring Rolling Resistance Fluctuations

[Conditions]
Feeding speed: 10mm/s
Applied load: no load (one block)

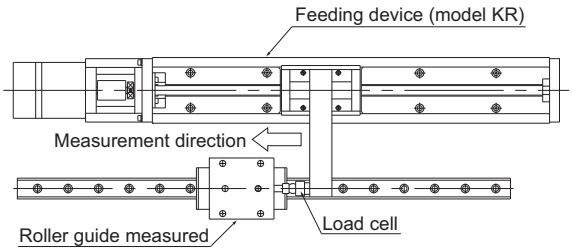

Rolling Resistance Measuring Machine

[Long-term Maintenance-free Operation]

● High-speed Durability Test Data

Use of a roller cage eliminates friction between rollers, minimizes heat generation and increases grease retention, thus to achieve long-term maintenance-free operation.

[Conditions]
Model No.: SRG45LC
Magnitude of preload: clearance C0
Speed: 180m/min
Acceleration: 1.5G
Stroke: 2300mm
Lubrication : Initial lubrication only
(THKAFB-LF Grease)

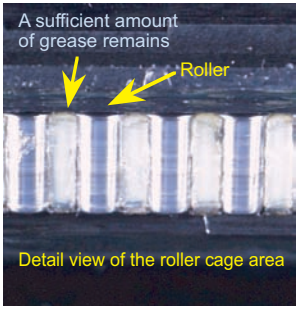

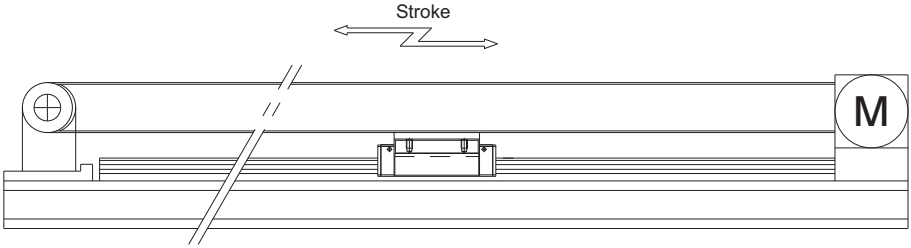

Test result: No anomaly observed after running 15,000 km

Result of High-speed Durability Test

[Ultra-high Rigidity]

● High Rigidity Evaluation Data

[Preload] SRG : radial clearance C0

Conventional type : radial clearance equivalent to C0

Radial rigidity

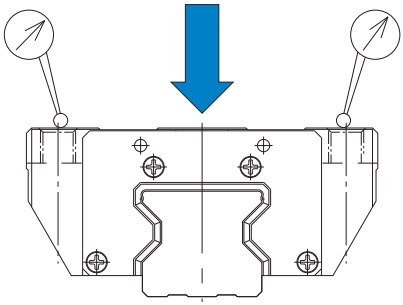

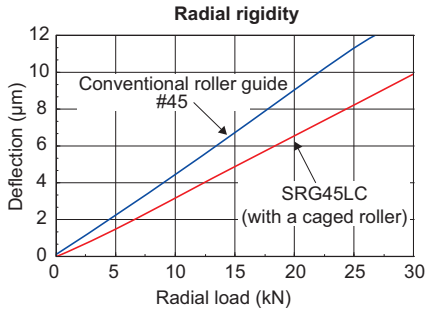

Reverse radial rigidity

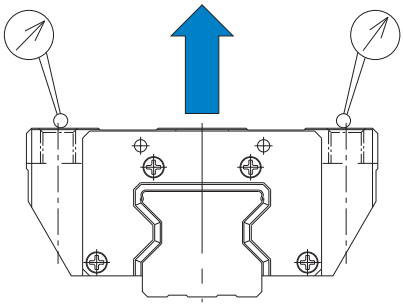

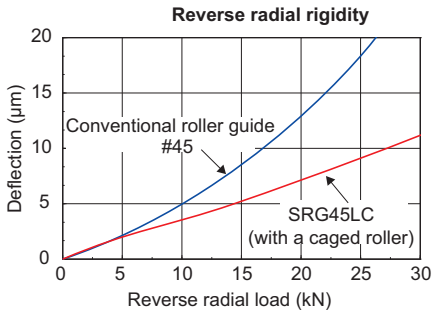

Horizontal rigidity

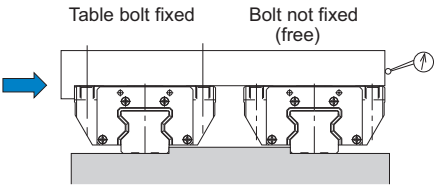

Rigidity is measured with the two axes placed in parallel and one of the axes not fixed with a bolt in order not to apply a moment.

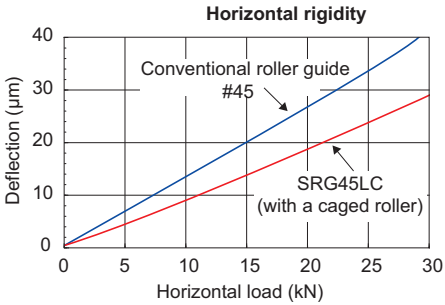

SRG

Caged Roller LM Guide Ultra-high Rigidity Type Model SRG

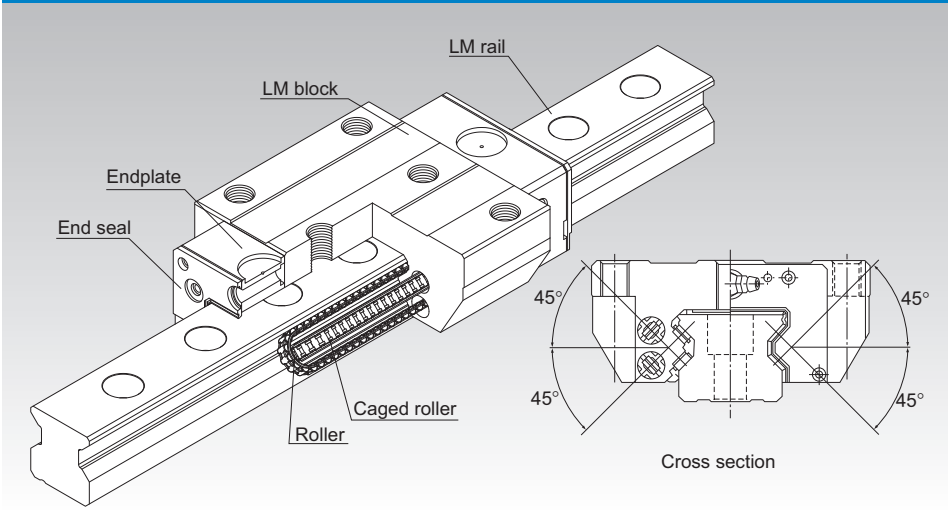

*For the caged roller, see A1-392.

Point of Selection	**A1-10**
Point of Design	**A1-434**
Options	**A1-457**
Model No.	**A1-522**
Precautions on Use	**A1-528**
Accessories for Lubrication	**A24-1**
Mounting Procedure and Maintenance	**B1-89**
Equivalent moment factor	**A1-43**
Rated Loads in All Directions	**A1-58**
Equivalent factor in each direction	**A1-60**
Radial Clearance	**A1-72**
Accuracy Standards	**A1-76**
Shoulder Height of the Mounting Base and the Corner Radius	**A1-446**
Error Allowance of the Mounting Surface	**A1-401**
Dimensions of Each Model with an Option Attached	**A1-470**

Structure and Features

SRG is an ultra-high rigidity Roller Guide that uses roller cages to allow low-friction, smooth motion and achieve long-term maintenance-free operation.

[Ultra-high Rigidity]
A higher rigidity is achieved by using highly rigid rollers as the rolling elements and having the overall roller length more than 1.5 times greater than the roller diameter.

[4-way Equal Load]
Since each row of rollers is arranged at a contact angle of 45°so that the LM block receives an equal load rating in all four directions (radial, reverse radial and lateral directions), high rigidity is ensured in all directions.

[Smooth Motion through Skewing Prevention]
The roller cage allows rollers to form an evenly spaced line while circulating, thus preventing the rollers from skewing as the block enters an loaded area. As a result, fluctuation of the rolling resistance is minimized, and stable, smooth motion is achieved.

[Long-term Maintenance-free Operation]
Use of roller cages eliminates friction between rollers and increases grease retention, enabling long-term maintenance-free operation to be achieved.

[Global Standard Size]
SRG is designed to have dimensions almost the same as that of Full Ball LM Guide model HSR, which THK as a pioneer of the linear motion system has developed and is practically a global standard size.

[Wide Array of Options]
Various options are available, including end seal, inner seal, side seal, Laminated Contact Scraper LaCS, protector, side scraper and Cap GC, to respond to diversified service environments.

Types and Features

Models SRG-15A, 20A

Specification Table⇒A1-402

The flange of the LM block has tapped holes.
Can be mounted from the top or the bottom.

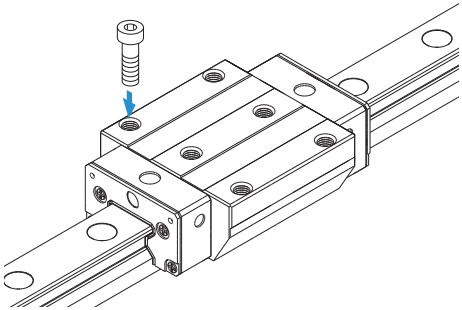

Model SRG-20LA

Specification Table⇒A1-402

The LM block has the same cross-sectional shape as model SRG-A, but has a longer overall LM block length (L) and a greater rated load.

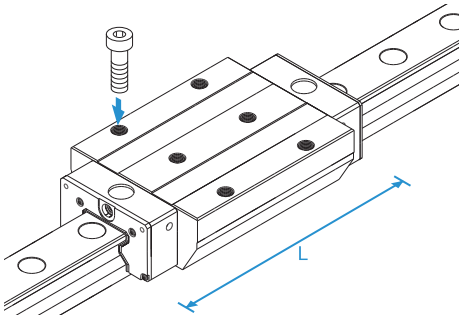

Model SRG-C

Specification Table⇒A1-402

The flange of the LM block has tapped holes. Can be mounted from the top or the bottom. Used in places where the table cannot have through holes for mounting bolts.

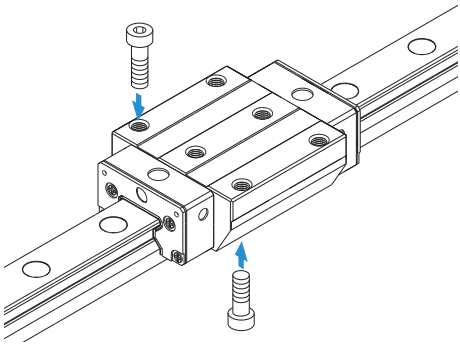

Model SRG-LC

Specification Table⇒A1-402

The LM block has the same cross-sectional shape as model SRG-C, but has a longer overall LM block length (L) and a greater rated load.

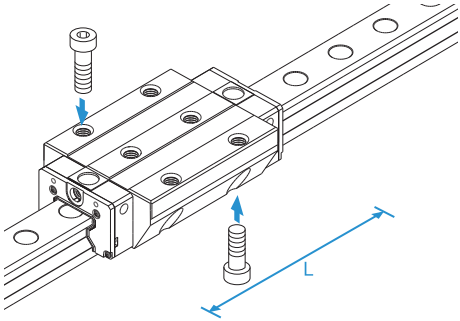

Model SRG-SLC

Specification Table⇒A1-404

The LM block has the same cross-sectional shape as model SRG-LC, but has a longer overall LM block length (L) and a greater rated load.

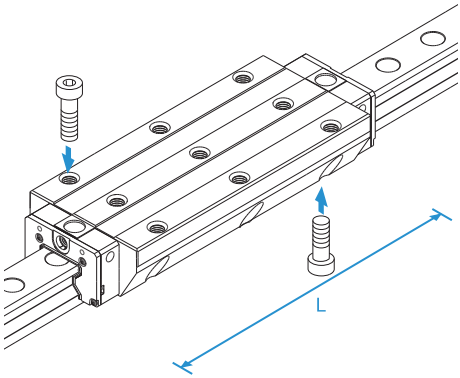

Model SRG-R

Specification Table⇒A1-408

With this type, the LM block has a smaller width (W) and tapped holes.
Used in places where the space for table width is limited.

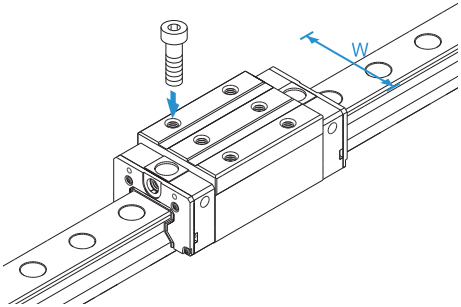

Model SRG-LR

Specification Table⇒A1-408

The LM block has the same cross-sectional shape as model SRG-R, but has a longer overall LM block length (L) and a greater rated load.

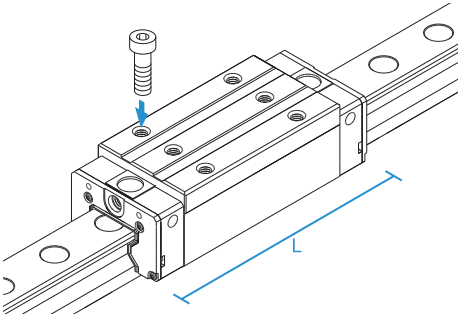

Model SRG-SLR

Specification Table⇒A1-410

The LM block has the same cross-sectional shape as model SRG-LR, but has a longer overall LM block length (L) and a greater rated load.

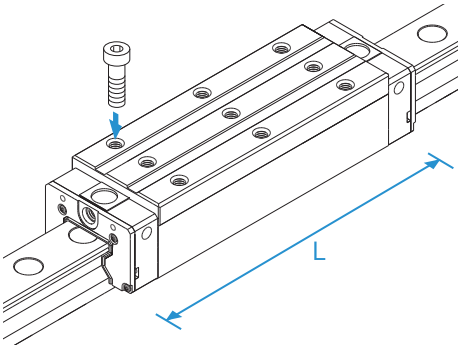

Error Allowance of the Mounting Surface

The caged roller LM Guide Model SRG features high rigidity since it uses rollers as its rolling element and it also features a cage-retainer which prevents the rollers from skewing. However, high machining accuracy is required in the mounting surface. If the error on the mounting surface is large, it will affect the rolling resistance and the service life. The following shows the maximum permissible value according to the radial clearance.

Table1 Error Allowance in Parallelism (P) between Two Rails

Unit: mm

Radial clearance / Model No.	Normal	C1	C0
SRG 15	0.005	0.003	0.003
SRG 20	0.008	0.006	0.004
SRG 25	0.009	0.007	0.005
SRG 30	0.011	0.008	0.006
SRG 35	0.014	0.010	0.007
SRG 45	0.017	0.013	0.009
SRG 55	0.021	0.014	0.011
SRG 65	0.027	0.018	0.014
SRG 85	0.040	0.027	0.021
SRG 100	0.045	0.031	0.024

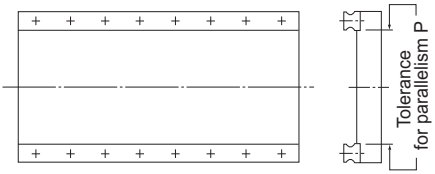

Fig.1

Table2 Error Allowance in Vertical Level (X) between Two Rails

Unit: mm

Radial clearance	Normal	C1	C0
Permissible error on the mounting surface X	0.00030a	0.00021a	0.00011a

$X = X_1 + X_2$ X_1 : Level difference on the rail mounting surface
X_2 : Level difference on the block mounting surface

Example of calculation

Rail span when a = 500mm

Error allowance of the mounting surface $X = 0.0003 \times 500 = 0.15$

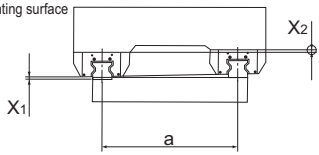

Fig.2

Table3 Error Allowance in Level (Y) in the Axial Direction

Unit: mm

Permissible error on the mounting surface	0.000036b

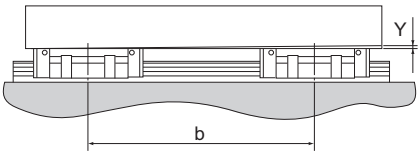

Fig.3

Models SRG-A, SRG-LA, SRG-C and SRG-LC

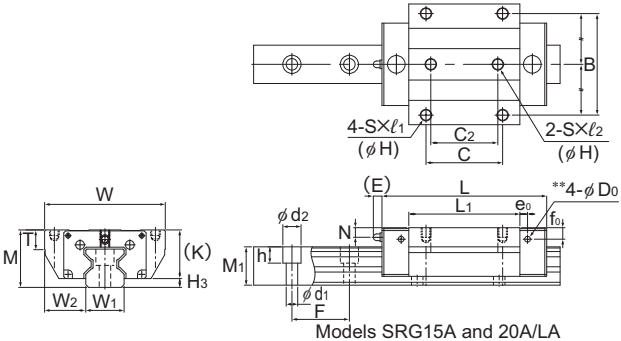

Models SRG15A and 20A/LA

Model No.	Outer dimensions			LM block dimensions																
	Height M	Width W	Length L	B	C	C_2	S	H	ℓ_1	ℓ_2	L_1	T	T_1	K	N	E	e_0	f_0	D_0	Grease nipple
SRG 15A	24	47	69.2	38	30	26	M5	(4.3)	8	7.5	45	7	(8)	20	4	4.5	4	6	2.9	PB107
SRG 20A SRG 20LA	30	63	86.2 106.2	53	40	35	M6	(5.4)	10	9	58 78	10	(10)	25.4	5	4.5	4	6	2.9	PB107
SRG 25C SRG 25LC	36	70	95.5 115.1	57	45	40	M8	6.8	—	—	65.5 85.1	9.5	10	31.5	5.5	12	6	6.4	5.2	B-M6F
SRG 30C SRG 30LC	42	90	111 135	72	52	44	M10	8.5	—	—	75 99	12	14	37	6.5	12	6	7.5	5.2	B-M6F

Model number coding

SRG30 LC 2 QZ TTHH C0 +1200L P Z T -Ⅱ

- SRG30: Model number
- LC: Type of LM block
- 2: No. of LM blocks used on the same rail
- QZ: With QZ Lubricator
- TTHH: Contamination protection accessory symbol (*1)
- C0: Radial clearance symbol (*2)
  - Normal (No symbol)
  - Light preload (C1)
  - Medium preload (C0)
- +1200L: LM rail length (in mm)
- P: Accuracy symbol (*3)
  - Precision grade (P)/Super precision grade (SP)
  - Ultra precision grade (UP)
- Z: With plate cover
- T: Symbol for LM rail jointed use
- -Ⅱ: Symbol for No. of rails used on the same plane (*4)

(*1) See contamination protection accessory on A1-494. (*2) See A1-72. (*3) See A1-76. (*4) See A1-13.

Note) This model number indicates that a single-rail unit constitutes one set. (i.e., required number of sets when 2 rails are used in parallel is 2 at a minimum.)
Those models equipped with QZ Lubricator cannot have a grease nipple. When desiring a grease nipple for a model attached with QZ, contact THK.

Download data by searching for the corresponding model number on the Technical Support site. https://tech.thk.com

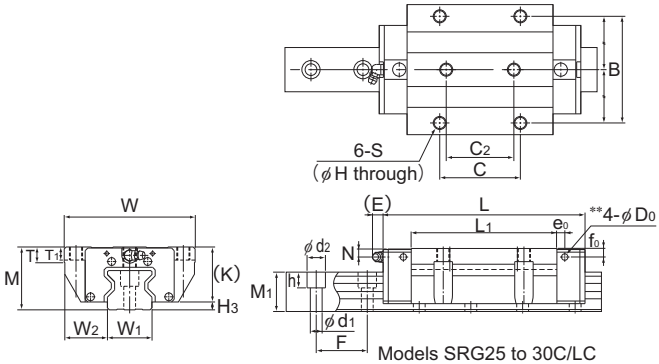

Models SRG25 to 30C/LC

Unit: mm

		LM rail dimensions						Basic load rating		Static permissible moment kN-m*					Mass	
		Width		Height	Pitch		Length*	C	C_0	M_A		M_B		M_C	LM block	LM rail
	H_3	W_1 0 -0.05	W_2	M_1	F	$d_1 \times d_2 \times h$	Max	kN	kN	1 block	Double blocks	1 block	Double blocks	1 block	kg	kg/m
	4	15	16	15.5	30	4.5×7.5×5.3	3000	11.3	25.8	0.21	1.24	0.21	1.24	0.24	0.20	1.58
	4.6	20	21.5	20	30	6×9.5×8.5	3000	21 26.7	46.9 63.8	0.48 0.88	2.74 4.49	0.48 0.88	2.74 4.49	0.58 0.79	0.42 0.57	2.58
	4.5	23	23.5	23	30	7×11×9	3000	27.9 34.2	57.5 75	0.641 1.07	3.7 5.74	0.641 1.07	3.7 5.74	0.795 1.03	0.7 0.9	3.6
	5	28	31	26	40	9×14×12	3000	39.3 48.3	82.5 108	1.02 1.76	6.21 9.73	1.02 1.76	6.21 9.73	1.47 1.92	1.2 1.6	4.4

Note1) The greasing hole on the top face and the pilot hole of the side nipple** are not drilled through in order to prevent foreign material from entering the block.
THK will mount a grease nipple per your request. Therefore, do not use the greasing hole of the top face and the side nipple pilot hole** for purposes other than mounting a grease nipple.
In case of oil lubrication, be sure to let THK know the mounting orientation and the exact position in each LM block where the piping joint should be attached.
For the mounting orientation and the lubrication, see A1-12 and A24-2, respectively.
The maximum length under "Length*" indicates the standard maximum length of an LM rail. (See A1-412.)
Static permissible moment*: 1 block: static permissible moment value with 1 LM block
Double blocks: static permissible moment value with 2 blocks closely contacting with each other

Note2) If the mounting holes (4 holes) of the LM block are back spot-faced, these models can be mounted on the table from the top and the bottom as with model SRG-C.
The value in the parentheses represents a dimension if the mounting hole is back spot-faced.
Contact THK for details.

Options⇒A1-457

Models SRG-C, SRG-LC and SRG-SLC

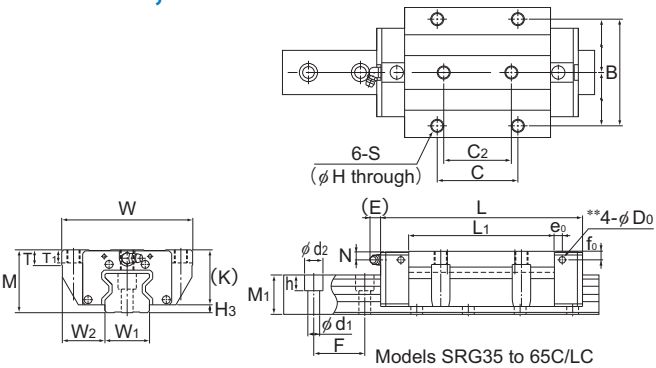

Model No.	Outer dimensions			LM block dimensions																
	Height M	Width W	Length L	B	C	C_2	S	H	ℓ_1	ℓ_2	L_1	T	T_1	K	N	E	e_0	f_0	D_0	Grease nipple
SRG 35C SRG 35LC SRG 35SLC	48	100	125 155 180.8	82	62 100	52 —	M10	8.5	—	—	82.2 112.2 138.0	11.5	10	42	6.5	12	6	6	5.2	B-M6F
SRG 45C SRG 45LC SRG 45SLC	60	120	155 190 231.5	100	80 120	60 —	M12	10.5	—	—	107 142 183.5	14.5	15	52	10	16	7	7	5.2	B-PT1/8
SRG 55C SRG 55LC SRG 55SLC	70	140	185 235 292	116	95 150	70 —	M14	12.5	—	—	129.2 179.2 236.2	17.5	18	60	12	16	9	8.5	5.2	B-PT1/8
SRG 65C SRG 65LC SRG 65SLC	90	170	244.9 303 380	142	110 200	82 —	M16	14.5	—	—	171.7 229.8 306.8	19.5	20	78.5	17	16	9	13.5	5.2	B-PT1/8

Model number coding

SRG45 LC 2 QZ TTHH C0 +1200L P Z T -Ⅱ

- SRG45: Model number
- LC: Type of LM block
- 2: No. of LM blocks used on the same rail
- QZ: With QZ Lubricator
- TTHH: Contamination protection accessory symbol (*1)
- C0: Radial clearance symbol (*2) — Normal (No symbol), Light preload (C1), Medium preload (C0)
- +1200L: LM rail length (in mm)
- P: Accuracy symbol (*3) — Precision grade (P)/Super precision grade (SP), Ultra precision grade (UP)
- Z: With plate cover
- T: Symbol for LM rail jointed use
- -Ⅱ: Symbol for No. of rails used on the same plane (*4)

(*1) See contamination protection accessory on A1-494. (*2) See A1-72. (*3) See A1-76. (*4) See A1-13.

Note) This model number indicates that a single-rail unit constitutes one set. (i.e., required number of sets when 2 rails are used in parallel is 2 at a minimum.)
Those models equipped with QZ Lubricator cannot have a grease nipple. When desiring a grease nipple for a model attached with QZ, contact THK.

Download data by searching for the corresponding model number on the Technical Support site. https://tech.thk.com

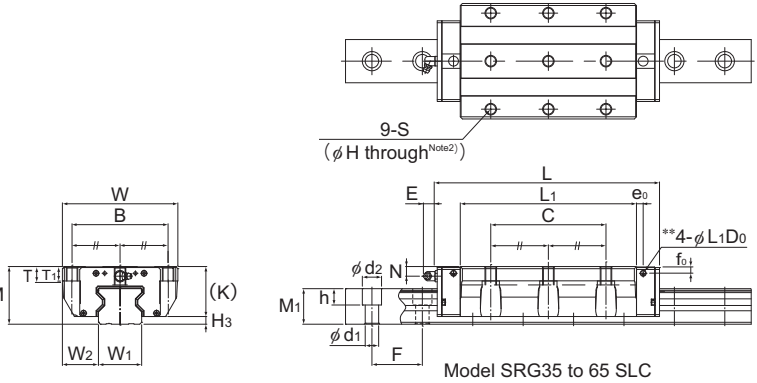

Model SRG35 to 65 SLC

Unit: mm

		LM rail dimensions						Basic load rating		Static permissible moment kN-m*					Mass	
		Width		Height	Pitch		Length*	C	C_0	M_A		M_B		M_C	LM block	LM rail
	H_3	W_1 0 -0.05	W_2	M_1	F	$d_1 \times d_2 \times h$	Max	kN	kN	1 block	Double blocks	1 block	Double blocks	1 block	kg	kg/m
	6	34	33	30	40	9×14×12	3000	59.1 76 87.9	119 165 199	1.66 3.13 4.53	10.1 17 23.9	1.66 3.13 4.53	10.1 17 23.9	2.39 3.31 4.09	1.9 2.4 3.2	6.9
	8	45	37.5	37	52.5	14×20×17	3090	91.9 115 139	192 256 328	3.49 6.13 9.99	20 32.2 50.0	3.49 6.13 9.99	20 32.2 50.0	4.98 6.64 8.91	3.7 4.5 6.3	11.6
	10	53	43.5	43	60	16×23×20	3060	131 167 210	266 366 488	5.82 10.8 19.1	33 57 93.7	5.82 10.8 19.1	33 57 93.7	8.19 11.2 15.6	5.9 7.8 10.7	15.8
	11.5	63	53.5	54	75	18×26×22	3000	219 278 352	441 599 811	12.5 22.7 41.3	72.8 120 202	12.5 22.7 41.3	72.8 120 202	16.8 22.1 30.9	12.5 16.4 22.3	23.7

Note1) The greasing hole on the top face and the pilot hole of the side nipple** are not drilled through in order to prevent foreign material from entering the block.
THK will mount a grease nipple per your request. Therefore, do not use the greasing hole of the top face and the side nipple pilot hole** for purposes other than mounting a grease nipple.
In case of oil lubrication, be sure to let THK know the mounting orientation and the exact position in each LM block where the piping joint should be attached.
For the mounting orientation and the lubrication, see A1-12 and A24-2, respectively.
The maximum length under "Length*" indicates the standard maximum length of an LM rail. (See A1-412.)
Static permissible moment*: 1 block: static permissible moment value with 1 LM block
Double blocks: static permissible moment value with 2 blocks closely contacting with each other

Note2) If the mounting holes (4 holes) of the LM block are back spot-faced, these models can be mounted on the table from the top and the bottom as with model SRG-C.
The value in the parentheses represents a dimension if the mounting hole is back spot-faced.
Contact THK for details.

Options⇒A1-457

Model SRG-LC

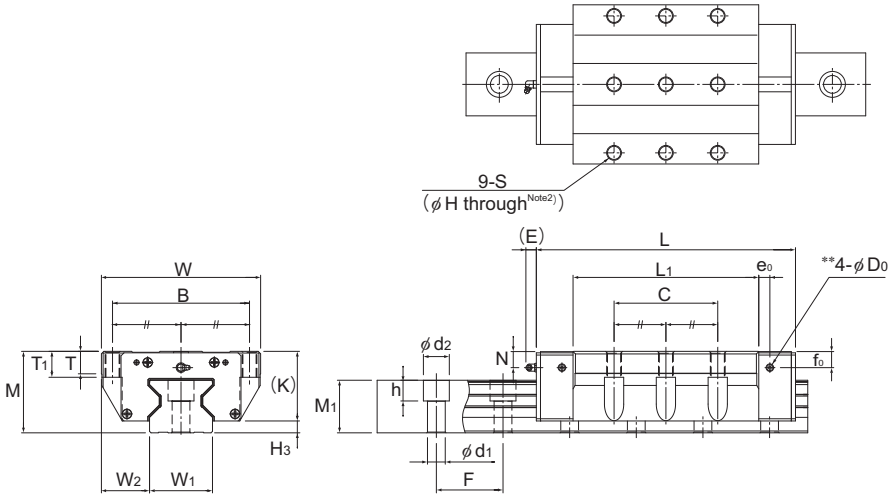

Model SRG85LC

Model No.	Outer dimensions			LM block dimensions													
	Height M	Width W	Length L	B	C	S	H	L_1	T	T_1	K	N	E	e_0	f_0	D_0	Grease nipple
SRG 85LC	110	215	350	185	140	M20	17.8	250.8	30	35	94	22	16	15	22	8.2	B-PT1/8
SRG 100LC	120	250	395	220	200	M20	17.8	280.2	35	38	104	23	16	15	23	8.2	B-PT1/4

Model number coding

SRG85 LC 2 TT C0 +2610L P Z T -Ⅱ

- SRG85: Model number
- LC: Type of LM block
- 2: No. of LM blocks used on the same rail
- TT: Contamination protection accessory symbol (*1)
- C0: Radial clearance symbol (*2)
  - Normal (No symbol)
  - Light preload (C1)
  - Medium preload (C0)
- +2610L: LM rail length (in mm)
- P: Accuracy symbol (*3)
  - Precision grade (P)/Super precision grade (SP)
  - Ultra precision grade (UP)
- Z: With plate cover
- T: Symbol for LM rail jointed use
- -Ⅱ: Symbol for No. of rails used on the same plane (*4)

(*1) See contamination protection accessory on A1-494. (*2) See A1-72. (*3) See A1-76. (*4) See A1-13.

Note) This model number indicates that a single-rail unit constitutes one set. (i.e., required number of sets when 2 rails are used in parallel is 2 at a minimum.)
Those models equipped with QZ Lubricator cannot have a grease nipple. When desiring a grease nipple for a model attached with QZ, contact THK.

Download data by searching for the corresponding model number on the Technical Support site. https://tech.thk.com

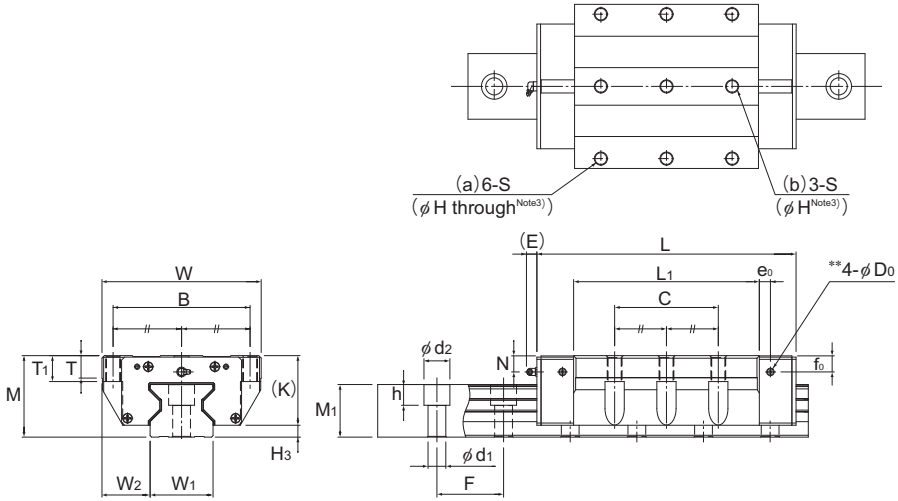

Model SRG100LC

Unit: mm

		LM rail dimensions						Basic load rating		Static permissible moment kN-m*					Mass	
		Width		Height	Pitch		Length*	C	C_0	M_A		M_B		M_C	LM block	LM rail
	H_3	W_1 0 -0.05	W_2	M_1	F	$d_1 \times d_2 \times h$	Max	kN	kN	1 block	Double blocks	1 block	Double blocks	1 block	kg	kg/m
	16	85	65	71	90	24×35×28	3000	497	990	45.3	239	45.3	239	51.9	26.2	35.7
	16	100	75	77	105	26×39×32	3000	601	1170	60	319	60	319	72.3	37.6	46.8

Note1) The greasing hole on the top face and the pilot hole of the side nipple** are not drilled through in order to prevent foreign material from entering the block.
See A1-413 for details.
The maximum length under "Length*" indicates the standard maximum length of an LM rail. (See A1-412.)
Static permissible moment*: 1 block: static permissible moment value with 1 LM block
Double blocks: static permissible moment value with 2 blocks closely contacting with each other
The removing/mounting jig is not provided as standard. When desiring to use it, contact THK.
Note2) The LM block mounting holes (9 holes) of SRG85LC are all through holes (full thread).
Note3) The LM block mounting holes in part (a) (6 holes) of SRG100LC are through holes (full thread).
The LM block mounting holes in part (b) (3 holes) have effective thread depth of 22 mm.

Options⇒A1-457

Models SRG-V, SRG-LV, SRG-R and SRG-LR

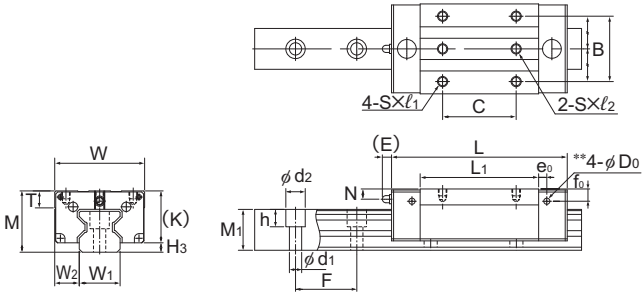

Models SRG15V and 20V/LV

Model No.	Outer dimensions			LM block dimensions														
	Height M	Width W	Length L	B	C	S	ℓ	ℓ_1	ℓ_2	L_1	T	K	N	E	e_0	f_0	D_0	Grease nipple
SRG 15V	24	34	69.2	26	26	M4	—	5	7.5	45	6	20	4	4.5	4	6	2.9	PB107
SRG 20V SRG 20LV	30	44	86.2 106.2	32	36 50	M5	—	7	9	58 78	8	25.4	5	4.5	4	6	2.9	PB107
SRG 25R SRG 25LR	40	48	95.5 115.1	35	35 50	M6	9	—	—	65.5 85.1	9.5	35.5	9.5	12	6	10.4	5.2	B-M6F
SRG 30R SRG 30LR	45	60	111 135	40	40 60	M8	10	—	—	75 99	12	40	9.5	12	6	10.5	5.2	B-M6F

Model number coding

SRG30 LR 2 QZ TTHH C0 +1200L P Z T -Ⅱ

- SRG30: Model number
- LR: Type of LM block
- 2: No. of LM blocks used on the same rail
- QZ: With QZ Lubricator
- TTHH: Contamination protection accessory symbol (*1)
- C0: Radial clearance symbol (*2)
  - Normal (No symbol)
  - Light preload (C1)
  - Medium preload (C0)
- +1200L: LM rail length (in mm)
- P: Accuracy symbol (*3)
  - Precision grade (P)/Super precision grade (SP)
  - Ultra precision grade (UP)
- Z: With plate cover
- T: Symbol for LM rail jointed use
- -Ⅱ: Symbol for No. of rails used on the same plane (*4)

(*1) See contamination protection accessory on A1-494. (*2) See A1-72. (*3) See A1-76. (*4) See A1-13.

Note) This model number indicates that a single-rail unit constitutes one set. (i.e., required number of sets when 2 rails are used in parallel is 2 at a minimum.)
Those models equipped with QZ Lubricator cannot have a grease nipple. When desiring a grease nipple for a model attached with QZ, contact THK.

Download data by searching for the corresponding model number on the Technical Support site. https://tech.thk.com

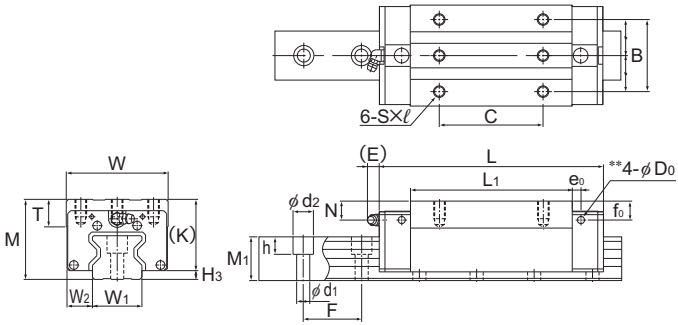

Models SRG25 to 30R/LR/LV

Unit: mm

		LM rail dimensions						Basic load rating		Static permissible moment kN-m*					Mass	
		Width		Height	Pitch		Length*	C	C_0	M_A		M_B		M_C	LM block	LM rail
	H_3	W_1 0 -0.05	W_2	M_1	F	$d_1 \times d_2 \times h$	Max	kN	kN	1 block	Double blocks	1 block	Double blocks	1 block	kg	kg/m
	4	15	9.5	15.5	30	4.5×7.5×5.3	3000	11.3	25.8	0.21	1.24	0.21	1.24	0.24	0.15	1.58
	4.6	20	12	20	30	6×9.5×8.5	3000	21 26.7	46.9 63.8	0.48 0.88	2.74 4.49	0.48 0.88	2.74 4.49	0.58 0.79	0.28 0.38	2.58
	4.5	23	12.5	23	30	7×11×9	3000	27.9 34.2	57.5 75	0.641 1.07	3.7 5.74	0.641 1.07	3.7 5.74	0.795 1.03	0.6 0.8	3.6
	5	28	16	26	40	9×14×12	3000	39.3 48.3	82.5 108	1.02 1.76	6.21 9.73	1.02 1.76	6.21 9.73	1.47 1.92	0.9 1.2	4.4

Note) The greasing hole on the top face and the pilot hole of the side nipple** are not drilled through in order to prevent foreign material from entering the block.
THK will mount a grease nipple per your request. Therefore, do not use the greasing hole of the top face and the side nipple pilot hole** for purposes other than mounting a grease nipple.
In case of oil lubrication, be sure to let THK know the mounting orientation and the exact position in each LM block where the piping joint should be attached.
For the mounting orientation and the lubrication, see A1-12 and A24-2, respectively.
The maximum length under "Length*" indicates the standard maximum length of an LM rail. (See A1-412.)
Static permissible moment*: 1 block: static permissible moment value with 1 LM block
Double blocks: static permissible moment value with 2 blocks closely contacting with each other

Options⇒A1-457

Models SRG-V, SRG-LV, SRG-SLV, SRG-R, SRG-LR and SRG-SLR

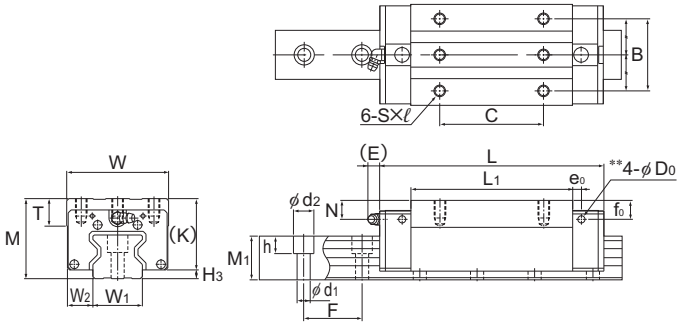

Models SRG35 to 65R/LR/LV

Model No.	Outer dimensions			LM block dimensions														
	Height M	Width W	Length L	B	C	S	ℓ	ℓ_1	ℓ_2	L_1	T	K	N	E	e_0	f_0	D_0	Grease nipple
SRG 35R SRG 35LR SRG 35SLR	55	70	125 155 180.8	50	50 72 100	M8	12	—	—	82.2 112.2 138.0	18.5	49	13.5	12	6	13	5.2	B-M6F
SRG 45R SRG 45LR SRG 45SLR	70	86	155 190 231.5	60	60 80 120	M10	20	—	—	107 142 183.5	24.5	62	20	16	7	17	5.2	B-PT1/8
SRG 55R SRG 55LR SRG 55SLR	80	100	185 235 292	75	75 95 150	M12	18	—	—	129.2 179.2 236.2	27.5	70	22	16	9	18.5	5.2	B-PT1/8
SRG 65V SRG 65LV SRG 65SLV	90	126	244.9 303 380	76	70 120 200	M16	20	—	—	171.7 229.8 306.8	19.5	78.5	17	16	9	13.5	5.2	B-PT1/8

Model number coding

SRG45 LR 2 QZ TTHH C0 +1200L P Z T -II

- SRG45: Model number
- LR: Type of LM block
- 2: No. of LM blocks used on the same rail
- QZ: With QZ Lubricator
- TTHH: Contamination protection accessory symbol (*1)
- C0: Radial clearance symbol (*2)
  - Normal (No symbol)
  - Light preload (C1)
  - Medium preload (C0)
- +1200L: LM rail length (in mm)
- P: Accuracy symbol (*3)
  - Precision grade (P)/Super precision grade (SP)
  - Ultra precision grade (UP)
- Z: With plate cover
- T: Symbol for LM rail jointed use
- -II: Symbol for No. of rails used on the same plane (*4)

(*1) See contamination protection accessory on A1-494. (*2) See A1-72. (*3) See A1-76. (*4) See A1-13.

Note) This model number indicates that a single-rail unit constitutes one set. (i.e., required number of sets when 2 rails are used in parallel is 2 at a minimum.)
Those models equipped with QZ Lubricator cannot have a grease nipple. When desiring a grease nipple for a model attached with QZ, contact THK.

Download data by searching for the corresponding model number on the Technical Support site. https://tech.thk.com

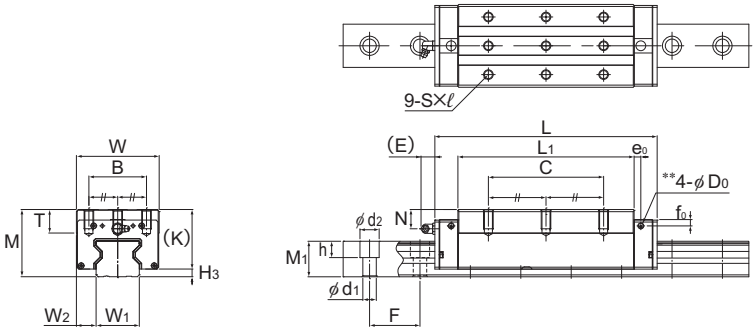

Models SRG35 to 65 SLR

Unit: mm

	LM rail dimensions							Basic load rating		Static permissible moment kN-m*					Mass	
		Width		Height	Pitch		Length*	C	C_0	M_A		M_B		M_C	LM block	LM rail
H_3		W_1 0 -0.05	W_2	M_1	F	$d_1 \times d_2 \times h$	Max	kN	kN	1 block	Double blocks	1 block	Double blocks	1 block	kg	kg/m
	6	34	18	30	40	9×14×12	3000	59.1 76 87.9	119 165 199	1.66 3.13 4.53	10.1 17 23.9	1.66 3.13 4.53	10.1 17 23.9	2.39 3.31 4.09	1.6 2.1 2.6	6.9
	8	45	20.5	37	52.5	14×20×17	3090	91.9 115 139	192 256 328	3.49 6.13 9.99	20 32.2 50.0	3.49 6.13 9.99	20 32.2 50.0	4.98 6.64 8.91	3.2 4.1 5.4	11.6
	10	53	23.5	43	60	16×23×20	3060	131 167 210	266 366 488	5.82 10.8 19.1	33 57 93.7	5.82 10.8 19.1	33 57 93.7	8.19 11.2 15.6	5 6.9 9.2	15.8
	11.5	63	31.5	54	75	18×26×22	3000	219 278 352	441 599 811	12.5 22.7 41.3	72.8 120 202	12.5 22.7 41.3	72.8 120 202	16.8 22.1 30.9	9.0 12.1 16.1	23.7

Note) The greasing hole on the top face and the pilot hole of the side nipple** are not drilled through in order to prevent foreign material from entering the block.
THK will mount a grease nipple per your request. Therefore, do not use the greasing hole of the top face and the side nipple pilot hole** for purposes other than mounting a grease nipple.
In case of oil lubrication, be sure to let THK know the mounting orientation and the exact position in each LM block where the piping joint should be attached.
For the mounting orientation and the lubrication, see **A1-12** and **A24-2**, respectively.
The maximum length under "Length*" indicates the standard maximum length of an LM rail. (See **A1-412**.)
Static permissible moment*: 1 block: static permissible moment value with 1 LM block
Double blocks: static permissible moment value with 2 blocks closely contacting with each other

Options⇒A1-457

Standard Length and Maximum Length of the LM Rail

Table4 shows the standard lengths and the maximum lengths of model SRG variations. If the maximum length of the desired LM rail exceeds them, jointed rails will be used. Contact THK for details. For the G dimension when a special length is required, we recommend selecting the corresponding G value from the table. The longer the G dimension is, the less stable the G area may become after installation, thus causing an adverse impact to accuracy.

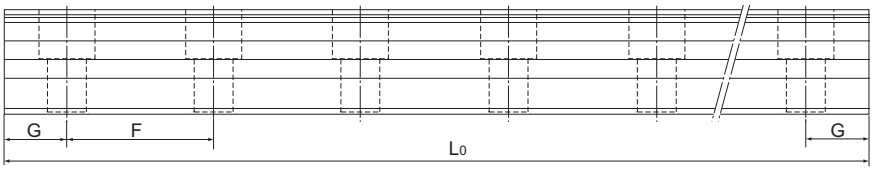

Table4 Standard Length and Maximum Length of the LM Rail for Model SRG

Unit: mm

Model No.	SRG 15	SRG 20	SRG 25	SRG 30	SRG 35	SRG 45	SRG 55	SRG 65	SRG 85	SRG 100
LM rail standard length (L_o)	160 220 280 340 400 460 520 580 640 700 760 820 940 1000 1060 1120 1180 1240 1360 1480 1600	220 280 340 400 460 520 580 640 700 760 820 940 1000 1060 1120 1180 1240 1360 1480 1600 1720 1840 1960 2080 2200	220 280 340 400 460 520 580 640 700 760 820 940 1000 1060 1120 1180 1240 1300 1360 1420 1480 1540 1600 1720 1840 1960 2080 2200 2320 2440	280 360 440 520 600 680 760 840 920 1000 1080 1160 1240 1320 1400 1480 1560 1640 1720 1800 1880 1960 2040 2200 2360 2520 2680 2840 3000	280 360 440 520 600 680 760 840 920 1000 1080 1160 1240 1320 1400 1480 1560 1640 1720 1800 1880 1960 2040 2200 2360 2520 2680 2840 3000	570 675 780 885 990 1095 1200 1305 1410 1515 1620 1725 1830 1935 2040 2145 2250 2355 2460 2565 2670 2775 2880 2985 3090	780 900 1020 1140 1260 1380 1500 1620 1740 1860 1980 2100 2220 2340 2460 2580 2700 2820 2940 3060	1270 1570 2020 2620	1530 1890 2250 2610	1340 1760 2180 2600
Standard pitch F	30	30	30	40	40	52.5	60	75	90	105
G	20	20	20	20	20	22.5	30	35	45	40
Max length	3000	3000	3000	3000	3000	3090	3060	3000	3000	3000

Note1) The maximum length varies with accuracy grades. Contact THK for details.
Note2) If jointed rails are not allowed and a greater length than the maximum values above is required, contact THK.

Plate Cover

By covering the LM rail's mounting holes with ultra-thin stainless steel (SUS304) plates, the sealability of the end seals increase drastically, helping prevent foreign materials and liquid from entering from the top of the LM rail. Contact THK for further details regarding mounting.

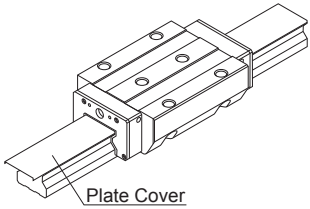

Note 1) The Model SRG with plate cover is not a standard specification. (Please note it is not possible to add just the plate cover afterwards.)
Note 2) The LM block must be removed from the LM rail when mounting. When doing this, a removing/mounting jig (see A**1-520**) is required. Please contact THK for details.
Note 3) When LM rails are joined to exceed the maximum manufactured length, their plate covers must also be joined. The joined plate covers must be level at the points where they make contact. Contact THK for details.
Note 4) Plate covers are available for models SRG 35 to 65.

Greasing Hole

[Greasing Hole for Model SRG]

Model SRG allows lubrication from both the side and top faces of the LM block. The greasing hole of standard types is not drilled through in order to prevent foreign material from entering the LM block. When using the greasing hole, contact THK.
When using the greasing hole on the top face of models SRG-R, SRG-LR and SRG-SLR, a greasing adapter is separately required. Contact THK for details.
If the mounting orientation of the LM Guide is other than horizontal use, the lubricant may not reach the raceway completely.
Be sure to let THK know the mounting orientation and the exact position in each LM block where the grease nipple or the piping joint should be attached.
For the mounting orientation and the lubrication, see A**1-12** and A**24-2**, respectively.

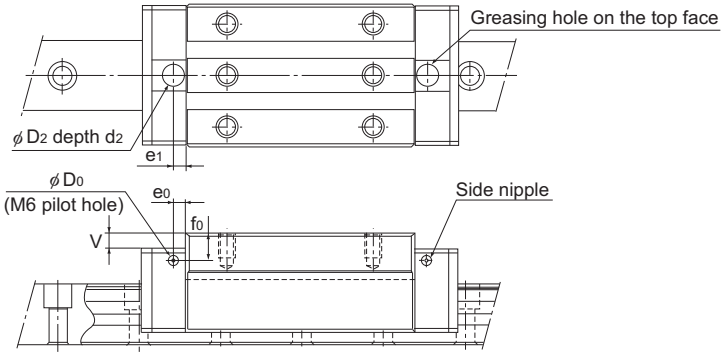

Unit: mm

Model No.		Pilot hole for side nipple			Applicable nipple	Greasing hole on the top face				
		e_0	f_0	D_0		D_2	(O-ring)	V	e_1	d_2
SRG	15A 15V	4	6	2.9	PB107	9.2	(P6)	0.5	5.5	1.5
	20A 20LA	4	6	2.9	PB107	9.2	(P6)	0.5	6.5	1.5
	20V 20LV	4	6	2.9	PB107	9.2	(P6)	0.5	6.5	1.5
	25C 25LC	6	6.4	5.2	M6F	10.2	(P7)	0.5	6	1.5
	25R 25LR	6	10.4	5.2	M6F	10.2	(P7)	4.5	6	1.5
	30C 30LC	6	7.5	5.2	M6F	10.2	(P7)	0.4	6	1.4
	30R 30LR	6	10.5	5.2	M6F	10.2	(P7)	3.4	6	1.4
	35C 35LC 35SLC	6	6	5.2	M6F	10.2	(P7)	0.4	6	1.4
	35R 35LR 35SLR	6	13	5.2	M6F	10.2	(P7)	7.4	6	1.4
	45C 45LC 45SLC	7	7	5.2	M6F	10.2	(P7)	0.4	7	1.4
	45R 45LR 45SLR	7	17	5.2	M6F	10.2	(P7)	10.4	7	1.4
	55C 55LC 55SLC	9	8.5	5.2	M6F	10.2	(P7)	0.4	11	1.4
	55R 55LR 55SLR	9	18.5	5.2	M6F	10.2	(P7)	10.4	11	1.4
	65C 65LC 65SLC	9	13.5	5.2	M6F	10.2	(P7)	0.4	10	1.4
	65V 65LV 65SLV	9	13.5	5.2	M6F	10.2	(P7)	0.4	10	1.4
	85LC	15	22	8.2	PT1/8	13	(P10)	0.4	10	1
	100LC	15	23	8.2	PT1/8	13	(P10)	0.4	10	1

Note) The greasing interval is longer than that of full-roller types because of the roller cage effect. However, the actual greasing interval may vary depending on the service environment, such as a high load and high speed. Contact THK for details.

SRN

Caged Roller LM Guide Ultra-high Rigidity Type (Low Center of Gravity) Model SRN

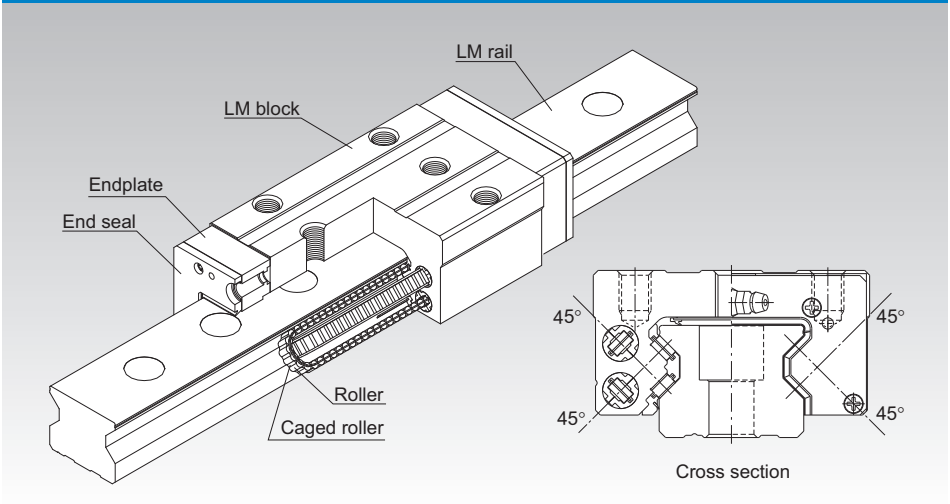

*For the caged roller, see A1-392.

Point of Selection	**A1-10**
Point of Design	**A1-434**
Options	**A1-457**
Model No.	**A1-522**
Precautions on Use	**A1-528**
Accessories for Lubrication	**A24-1**
Mounting Procedure and Maintenance	**B1-89**
Equivalent moment factor	**A1-43**
Rated Loads in All Directions	**A1-58**
Equivalent factor in each direction	**A1-60**
Radial Clearance	**A1-72**
Accuracy Standards	**A1-76**
Shoulder Height of the Mounting Base and the Corner Radius	**A1-446**
Error Allowance of the Mounting Surface	**A1-419**
Dimensions of Each Model with an Option Attached	**A1-470**

Structure and Features

SRN is an ultra-high rigidity Roller Guide that uses roller cages to allow low-friction, smooth motion and achieve long-term maintenance-free operation.

[Ultra-high Rigidity]
A higher rigidity is achieved by using highly rigid rollers as the rolling elements and having the overall roller length more than 1.5 times greater than the roller diameter.

[4-way Equal Load]
Since each row of rollers is arranged at a contact angle of 45°so that the LM block receives an equal load rating in all directions (radial, reverse radial and lateral directions), high rigidity is ensured in all directions.

[Smooth Motion through Skewing Prevention]
The roller cage allows rollers to form an evenly spaced line while circulating, thus preventing the rollers from skewing as the block enters an loaded area. As a result, fluctuation of the rolling resistance is minimized, and stable, smooth motion is achieved.

[Long-term Maintenance-free Operation]
Use of roller cages eliminates friction between rollers and increases grease retention, enabling long-term maintenance-free operation to be achieved.

[Low-Profile Low Center of Gravity]
Because it has a lower total height than the Caged Roller LM Guide Model SRG, it is ideal for compact designs.

Types and Features

Model SRN-C

Specification Table⇒A1-420

The flange of the LM block has tapped holes.
Can be mounted from the top or the bottom.
Used in places where the table cannot have through holes for mounting bolts.

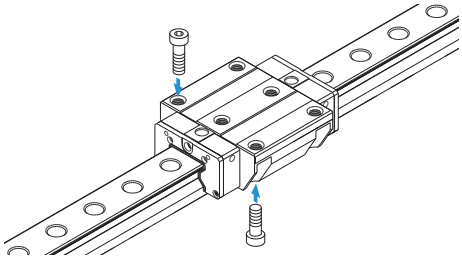

Model SRN-LC

Specification Table⇒A1-420

The LM block has the same cross-sectional shape as model SRN-C, but has a longer overall LM block length (L) and a greater rated load.

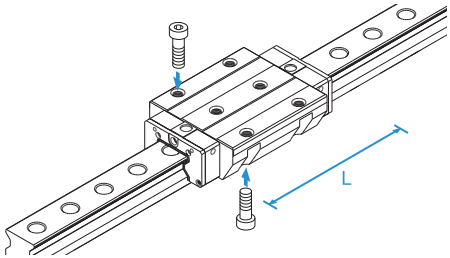

Model SRN-R

Specification Table⇒A1-422

With this type, the LM block has a smaller width (W) and tapped holes.
Used in places where the space for table width is limited.

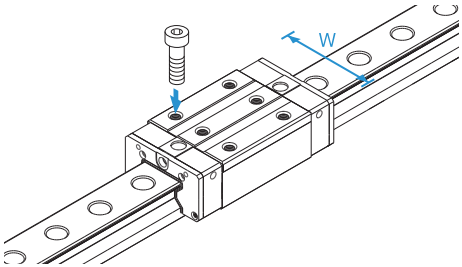

Model SRN-LR

Specification Table⇒A1-422

The LM block has the same cross-sectional shape as model SRN-R, but has a longer overall LM block length (L) and a greater rated load.

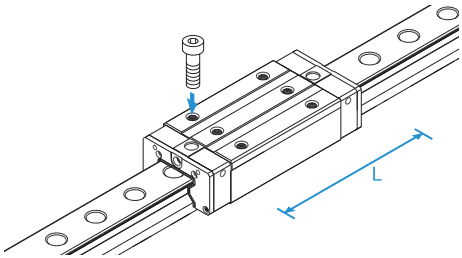

Error Allowance of the Mounting Surface

The caged roller LM Guide Model SRG features high rigidity since it uses rollers as its rolling element and it also features a cage which prevents the rollers from skewing. However, high machining accuracy is required in the mounting surface. If the error on the mounting surface is large, it will affect the rolling resistance and the service life. The following shows the maximum permissible value according to the radial clearance.

Table1 Error Allowance in Parallelism (P) between Two Rails

Unit: mm

Radial clearance / Model No.	Normal	C1	C0
SRN 35	0.014	0.010	0.007
SRN 45	0.017	0.013	0.009
SRN 55	0.021	0.014	0.011
SRN 65	0.027	0.018	0.014

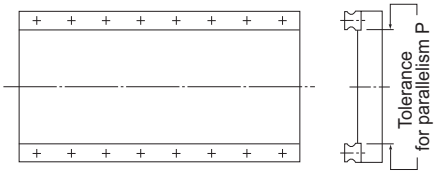

Fig.1

Table2 Error Allowance in Vertical Level (X) between Two Rails

Unit: mm

Radial clearance	Normal	C1	C0
Permissible error on the mounting surface X	0.00030a	0.00021a	0.00011a

$X = X_1 + X_2$ X_1 : Level difference on the rail mounting surface

X_2 : Level difference on the block mounting surface

Example of calculation

Rail span when a = 500mm

Error allowance of the mounting surface $X = 0.0003 \times 500$
$= 0.15$

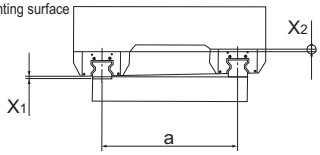

Fig.2

Table3 Error Allowance in Level (Y) in the Axial Direction

Unit: mm

Permissible error on the mounting surface	0.000036b

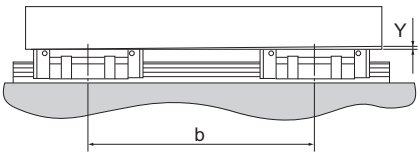

Fig.3

Models SRN-C and SRN-LC

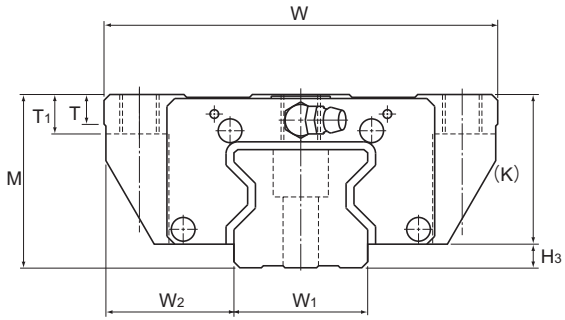

Model No.	Outer dimensions			LM block dimensions																
	Height M	Width W	Length L	B	C	C_2	S	H	L_1	T	T_1	K	N	E	e_0	f_0	D_0	Grease nipple	H_3
SRN 35C SRN 35LC	44	100	125 155	82	62	52	M10	8.5	82.2 112.2	7.5	10	38	6.5	12	8	7	5.2	B-M6F	6
SRN 45C SRN 45LC	52	120	155 190	100	80	60	M12	10.5	107 142	7.5	15	45	7	12	8.5	7.6	5.2	B-M6F	7
SRN 55C SRN 55LC	63	140	185 235	116	95	70	M14	12.5	129 179.2	10.5	18	53	8	16	10	9.8	5.2	PT1/8	10
SRN 65LC	75	170	303	142	110	82	M16	14.5	229.8	19.5	20	65	14	16	9	13	5.2	PT1/8	11.5

Model number coding

SRN45 C 2 QZ KK C0 +1160L P Z T -Ⅱ

- SRN45: Model number
- C: Type of LM block
- 2: No. of LM blocks used on the same rail
- QZ: With QZ lubricator
- KK: Contamination protection accessory symbol (*1)
- C0: Radial clearance symbol (*2)
  Normal (No symbol)
  Light preload (C1)
  Medium preload (C0)
- +1160L: LM rail length (in mm)
- P: Accuracy symbol (*3)
  Precision grade (P)/Super precision grade (SP)
  Ultra precision grade (UP)
- Z: With plate cover
- T: Symbol for LM rail jointed use
- -Ⅱ: Symbol for No. of rails used on the same plane (*4)

(*1) See contamination protection accessory on A1-494. (*2) See A1-72. (*3) See A1-76. (*4) See A1-13.

Note) This model number indicates that a single-rail unit constitutes one set. (i.e., required number of sets when 2 rails are used in parallel is 2 at a minimum.)
Those models equipped with QZ Lubricator cannot have a grease nipple. When desiring a grease nipple for a model attached with QZ, contact THK.

Download data by searching for the corresponding model number on the Technical Support site. https://tech.thk.com

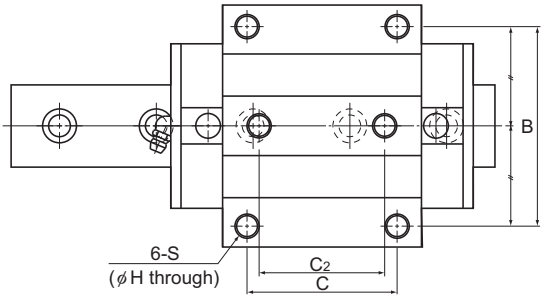

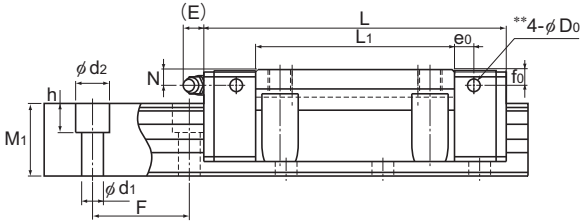

Unit: mm

	LM rail dimensions						Basic load rating		Static permissible moment kN-m*					Mass	
	Width		Height	Pitch		Length*	C	C_0	M_A		M_B		M_C	LM block	LM rail
	W_1 0 -0.05	W_2	M_1	F	$d_1 \times d_2 \times h$	Max	kN	kN	1 block	Double blocks	1 block	Double blocks	1 block	kg	kg/m
	34	33	30	40	9×14×12	3000	59.1 76	119 165	1.66 3.13	10.1 17	1.66 3.13	10.1 17	2.39 3.31	1.6 2	6.9
	45	37.5	36	52.5	14×20×17	3090	91.9 115	192 256	3.49 6.13	20 32.2	3.49 6.13	20 32.2	4.98 6.64	3 3.6	11.3
	53	43.5	43	60	16×23×20	3060	131 167	266 366	5.82 10.8	33 57	5.82 10.8	33 57	8.19 11.2	4.9 6.4	15.8
	63	53.5	49	75	18×26×22	3000	278	599	22.7	120	22.7	120	22.1	12.7	21.3

Note) The greasing hole on the top face and the pilot hole of the side nipple** are not drilled through in order to prevent foreign material from entering the block.
See A1-425 for details.
The maximum length under "Length*" indicates the standard maximum length of an LM rail. (See A1-424.)
Static permissible moment*: 1 block: static permissible moment value with 1 LM block
Double blocks: static permissible moment value with 2 blocks closely contacting with each other

Options⇒A1-457

Models SRN-R and SRN-LR

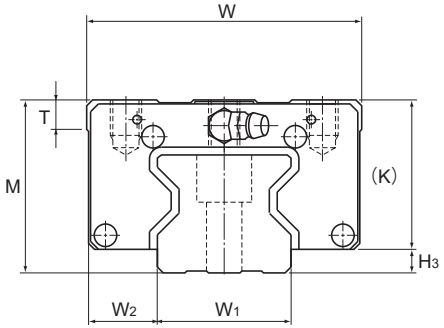

Model No.	Outer dimensions			LM block dimensions													
	Height M	Width W	Length L	B	C	S×ℓ	L_1	T	K	N	E	e_0	f_0	D_0	Grease nipple	H_3
SRN 35R SRN 35LR	44	70	125 155	50	50 72	M8×9	82.2 112.2	7.5	38	6.5	12	8	7	5.2	B-M6F	6
SRN 45R SRN 45LR	52	86	155 190	60	60 80	M10×11	107 142	7.5	45	7	12	8.5	7.6	5.2	B-M6F	7
SRN 55R SRN 55LR	63	100	185 235	75	75 95	M12×13	129 179.2	10.5	53	8	16	10	9.8	5.2	PT1/8	10
SRN 65LR	75	126	303	76	120	M16×16	229.8	19.5	65	14	16	9	13	5.2	PT1/8	11.5

Model number coding

SRN45 LR 2 QZ KK C0 +1200L P Z T -Ⅱ

- SRN45: Model number
- LR: Type of LM block
- 2: No. of LM blocks used on the same rail
- QZ: With QZ lubricator
- KK: Contamination protection accessory symbol (*1)
- C0: Radial clearance symbol (*2)
  - Normal (No symbol)
  - Light preload (C1)
  - Medium preload (C0)
- +1200L: LM rail length (in mm)
- P: Accuracy symbol (*3)
  - Precision grade (P)/Super precision grade (SP)
  - Ultra precision grade (UP)
- Z: With plate cover
- T: Symbol for LM rail jointed use
- -Ⅱ: Symbol for No. of rails used on the same plane (*4)

(*1) See contamination protection accessory on A1-494. (*2) See A1-72. (*3) See A1-76. (*4) See A1-13.

Note) This model number indicates that a single-rail unit constitutes one set. (i.e., required number of sets when 2 rails are used in parallel is 2 at a minimum.)
Those models equipped with QZ Lubricator cannot have a grease nipple. When desiring a grease nipple for a model attached with QZ, contact THK.

Download data by searching for the corresponding model number on the Technical Support site. https://tech.thk.com

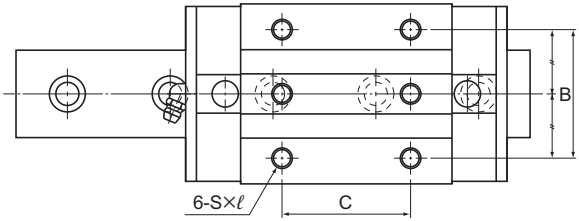

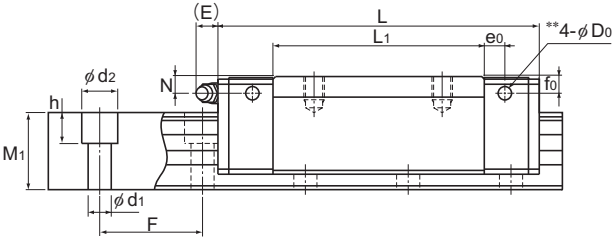

Unit: mm

	LM rail dimensions						Basic load rating		Static permissible moment kN-m*					Mass	
	Width		Height	Pitch		Length*	C	C_0	M_A		M_B		M_C	LM block	LM rail
	W_1 0 -0.05	W_2	M_1	F	$d_1 \times d_2 \times h$	Max	kN	kN	1 block	Double blocks	1 block	Double blocks	1 block	kg	kg/m
	34	18	30	40	9×14×12	3000	59.1 76	119 165	1.66 3.13	10.1 17	1.66 3.13	10.1 17	2.39 3.31	1.1 1.4	6.9
	45	20.5	36	52.5	14×20×17	3090	91.9 115	192 256	3.49 6.13	20 32.2	3.49 6.13	20 32.2	4.98 6.64	1.9 2.5	11.3
	53	23.5	43	60	16×23×20	3060	131 167	266 366	5.82 10.8	33 57	5.82 10.8	33 57	8.19 11.2	3.2 4.5	15.8
	63	31.5	49	75	18×26×22	3000	278	599	22.7	120	22.7	120	22.1	9.4	21.3

Note) The greasing hole on the top face and the pilot hole of the side nipple** are not drilled through in order to prevent foreign material from entering the block.
See A1-425 for details.
The maximum length under "Length*" indicates the standard maximum length of an LM rail. (See A1-424.)
Static permissible moment*: 1 block: static permissible moment value with 1 LM block
Double blocks: static permissible moment value with 2 blocks closely contacting with each other

Options⇒A1-457

Standard Length and Maximum Length of the LM Rail

Table4 shows the standard lengths and the maximum lengths of model SRN variations. If the maximum length of the desired LM rail exceeds them, jointed rails will be used. Contact THK for details. For the G dimension when a special length is required, we recommend selecting the corresponding G value from the table. The longer the G dimension is, the less stable the G area may become after installation, thus causing an adverse impact to accuracy.

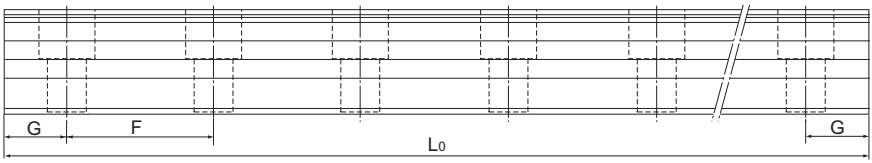

Table4 Standard Length and Maximum Length of the LM Rail for Model SRN

Unit: mm

Model No.	SRN 35	SRN 45	SRN 55	SRN 65
LM rail standard length (L_o)	280 360 440 520 600 680 760 840 920 1000 1080 1160 1240 1320 1400 1480 1560 1640 1720 1800 1880 1960 2040 2200 2360 2520 2680 2840 3000	570 675 780 885 990 1095 1200 1305 1410 1515 1620 1725 1830 1935 2040 2145 2250 2355 2460 2565 2670 2775 2880 2985 3090	780 900 1020 1140 1260 1380 1500 1620 1740 1860 1980 2100 2220 2340 2460 2580 2700 2820 2940 3060	1270 1570 2020 2620
Standard pitch F	40	52.5	60	75
G	20	22.5	30	35
Max length	3000	3090	3060	3000

Note1) The maximum length varies with accuracy grades. Contact THK for details.
Note2) If jointed rails are not allowed and a greater length than the maximum values above is required, contact THK.

Plate Cover

By covering the LM rail's mounting holes with ultra-thin stainless steel (SUS304) plates, the sealability of the end seals increase drastically, helping prevent foreign materials and liquid from entering from the top of the LM rail. Contact THK for further details regarding mounting.

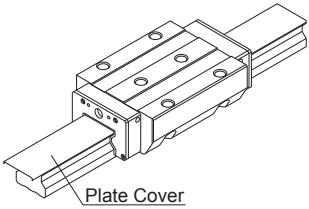

Note 1) The Model SRN with plate cover is not a standard specification. (Please note it is not possible to add just the plate cover afterwards.)
Note 2) The LM block must be removed from the LM rail when mounting. When doing this, a removing/mounting jig (see A1-520) is required. Please contact THK for details.
Note 3) When LM rails are joined to exceed the maximum manufactured length, their plate covers must also be joined. The joined plate covers must be level at the points where they make contact. Contact THK for details.
Note 4) Plate covers are available for models SRN 35 to 65.

Greasing Hole

[Greasing Hole for Model SRN]

Model SRN allows lubrication from both the side and top faces of the LM block. The greasing hole of standard types is not drilled through in order to prevent foreign material from entering the LM block. When using the greasing hole, contact THK.

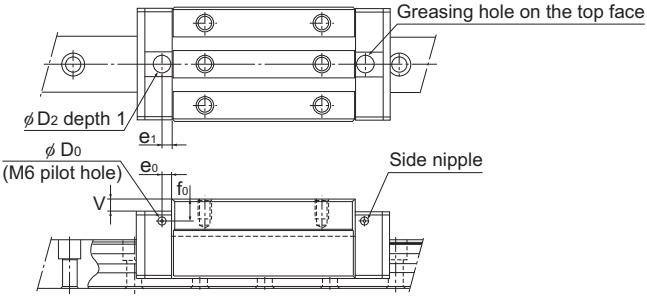

Unit: mm

Model No.		Pilot hole for side nipple			Applicable nipple	Greasing hole on the top face			
		e_0	f_0	D_0		D_2	(O-ring)	V	e_1
SRN	35C 35LC	8	7.0	5.2	M6F	10.2	(P7)	0.4	6
	35R 35LR	8	7.0	5.2	M6F	10.2	(P7)	0.4	6
	45C 45LC	8.5	7.6	5.2	M6F	10.2	(P7)	0.4	7
	45R 45LR	8.5	7.6	5.2	M6F	10.2	(P7)	0.4	7
	55C 55LC	10	9.8	5.2	M6F	10.2	(P7)	0.4	11
	55R 55LR	10	9.8	5.2	M6F	10.2	(P7)	0.4	11
	65LC	9	13	5.2	M6F	10.2	(P7)	0.4	10
	65LR	9	13	5.2	M6F	10.2	(P7)	0.4	10

Note) The greasing interval is longer than that of full-roller types because of the roller cage effect. However, the actual greasing interval may vary depending on the service environment, such as a high load and high speed. Contact THK for details.

SRW

Caged Roller LM Guide Ultra-high Rigidity Type (Wide) Model SRW

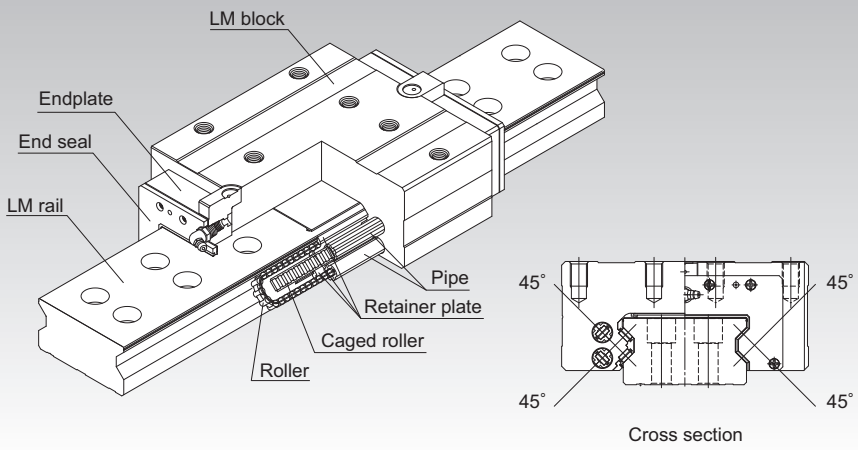

*For the caged roller, see A1-392.

Point of Selection A1-10

Point of Design A1-434

Options A1-457

Model No. A1-522

Precautions on Use A1-528

Accessories for Lubrication A24-1

Mounting Procedure and Maintenance B1-89

Equivalent moment factor A1-43

Rated Loads in All Directions A1-58

Equivalent factor in each direction A1-60

Radial Clearance A1-72

Accuracy Standards A1-84

Shoulder Height of the Mounting Base and the Corner Radius A1-446

Permissible Error of the Mounting Surface A1-429

Dimensions of Each Model with an Option Attached A1-470

Structure and Features

Based on Caged Roller LM Guide model SRG, this model has a wider rail and two rows of LM rail mounting holes to achieve high mounting strength and mounting stability. SRW is an ultra-high rigidity Roller Guide that uses roller cages to allow low-friction, smooth motion and achieve long-term maintenance-free operation.

[Ultra-high Rigidity]

Since it has a wide rail and can be secured on the table using two rows of mounting bolts, the mounting strength is significantly increased. In addition, since the crosswise raceway distance (L) is large, model SRW is structurally strong against a moment load (Mc moment) in the rolling direction. Furthermore, model SRW uses rollers that show little elastic deformation as its rolling elements, and the overall length of each roller is 1.5 times greater than the diameter, thus to increase the rigidity.

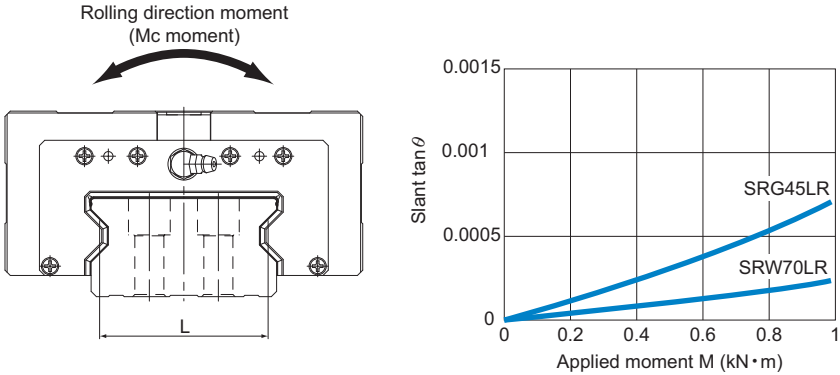

Fig.1 Result of Comparison between Models SRW and SRG in Moment Rigidity in the Rolling Direction (Mc Moment)

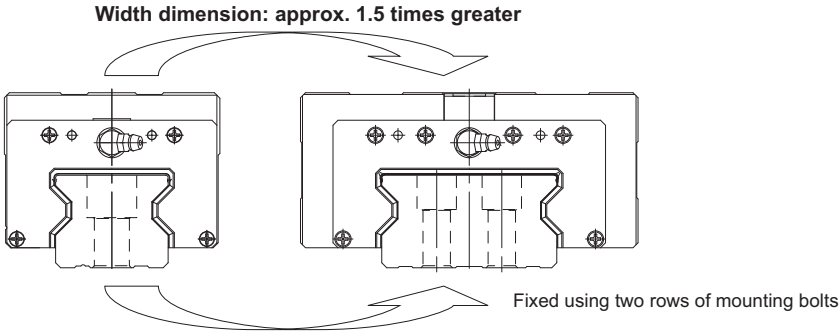

Fig.2 Comparison between Models SRW and SRG in Cross Section

[Smoothness Achieved through Skewing Prevention]
The roller cage allows rollers to form an evenly spaced line while circulating, thus preventing the rollers from skewing as the block enters an loaded area. As a result, fluctuation of the rolling resistance is minimized, and stable, smooth motion is achieved.

[Long-term Maintenance-free Operation]
Use of the roller cage eliminates friction between rollers and enables the lubricant to be retained in grease pockets formed between adjacent rollers. As the rollers circulate, the grease pocket serves to provide the required amount of lubricant to the contact curvature of the spacer and the roller, thus to achieve long-term maintenance-free operation.

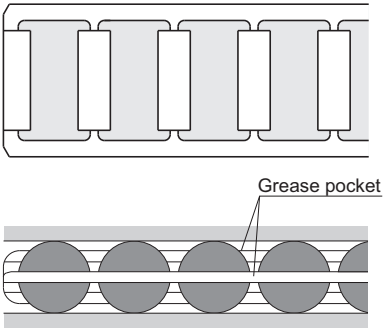

Fig.3

Types and Features

Model SRW-LR

Specification Table⇒A1-430

The LM block has tapped holes.

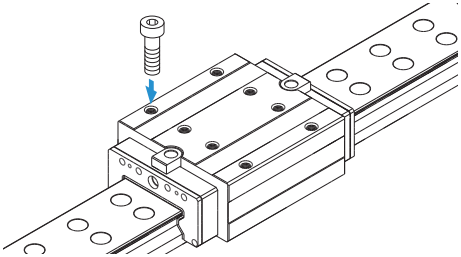

Permissible Error of the Mounting Surface

The Caged Roller LM Guide Model SRW features high rigidity since the raceway is made up of rollers, preventing roller skew due to the roller cage. However, high machining accuracy is required in the mounting surface. If the error on the mounting surface is large, it will affect the rolling resistance and the service life. The following shows the maximum permissible value (limit value) according to the radial clearance.

Table1 Error in Parallelism (P) between Two Rails

Unit: mm

Radial clearance / Model No.	Normal	C1	C0
SRW 70	0.013	0.009	0.007
SRW 85	0.016	0.011	0.008
SRW 100	0.020	0.014	0.011
SRW 130	0.026	0.018	0.014
SRW 150	0.030	0.021	0.016

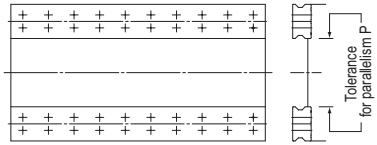

Fig.4

Table2 Error in Level (X) between Two Rails

Unit: mm

Radial clearance	Normal	C1	C0
Accuracy of the mounting surface X	0.00020a	0.00014a	0.000072a

Table3 Error in Level (Y) in the Axial Direction

Unit: mm

Accuracy of the mounting surface	0.000036b

$X=X_1+X_2$

X_1: Level difference on the rail mounting surface

X_2: Level difference on the block mounting surface

Example of calculation

When the rail span :

a=500mm

Accuracy of the mounting surface

X=0.0002×500

=0.1

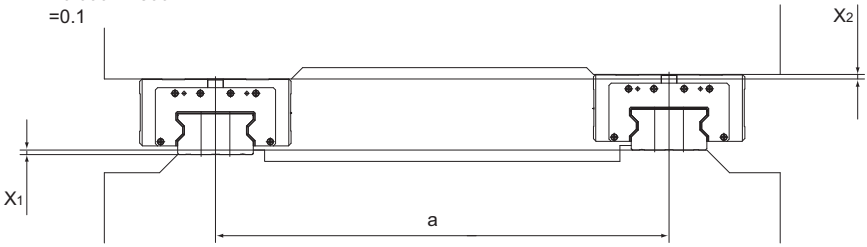

Fig.5

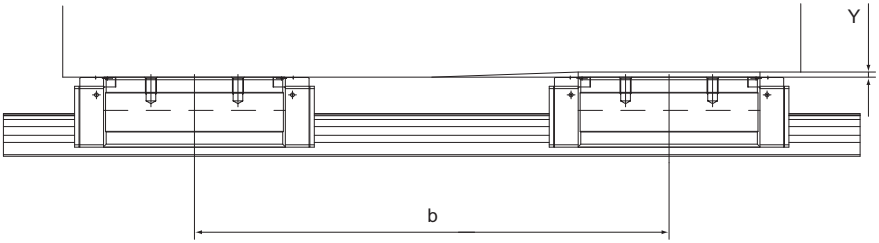

Fig.6

Model SRW-LR

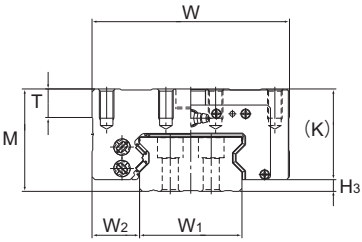

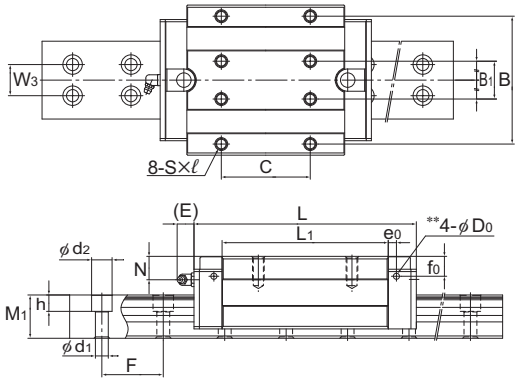

Models SRW70 to 100LR

Model No.	Outer dimensions			LM block dimensions													
	Height M	Width W	Length L	B	B_1	C	S×ℓ	L_1	T	K	N	E	e_0	f_0	D_0	Grease nipple	H_3
SRW 70LR	70	135	190	115	34	80	M10×20	142	20	62	20	16	7	19	5.2	B-PT1/8	8
SRW 85LR	80	165	235	140	40	95	M12×19	179.2	28	70	22	16	9	19.5	5.2	B-PT1/8	10
SRW 100LR	100	200	303	172	50	110	M14×20	229.8	20	88.5	27	16	9	26	5.2	B-PT1/8	11.5
SRW 130LR	130	260	350	220	65	140	M20×35	250.8	30	114	25	16	15	42	8.2	B-PT1/8	16
SRW 150LR	150	300	395	260	75	200	M20×40	280.2	35	134	28.8	16	15	53	8.2	B-PT1/4	16

Model number coding

SRW70LR 2 QZ KKHH C0 +1200L P Z T -Ⅱ

- SRW70LR: Model number
- 2: No. of LM blocks used on the same rail
- QZ: With QZ Lubricator
- KKHH: Contamination protection accessory symbol (*1)
- C0: Radial clearance symbol (*2) Normal (No symbol) Light preload (C1) Medium preload (C0)
- +1200L: LM rail length (in mm)
- P: Accuracy symbol (*3) Precision grade (P)/Super precision grade (SP) Ultra precision grade (UP)
- Z: With plate cover
- T: Symbol for LM rail jointed use
- -Ⅱ: Symbol for No. of rails used on the same plane (*4)

(*1) See contamination protection accessory on A1-494. (*2) See A1-72. (*3) See A1-84. (*4) See A1-13.

Note) Those models equipped with QZ Lubricator cannot have a grease nipple. When desiring a grease nipple for a model attached with QZ, contact THK.

Download data by searching for the corresponding model number on the Technical Support site. https://tech.thk.com

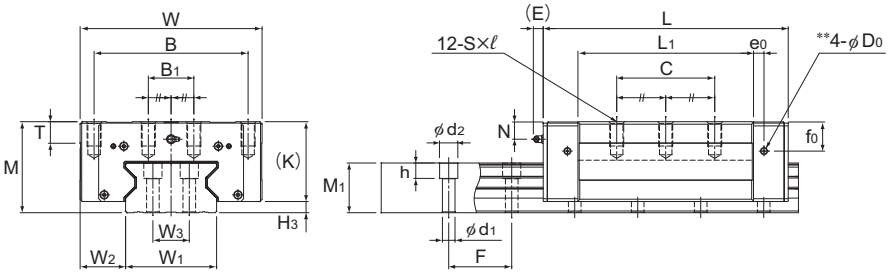

Models SRW130 and 150LR

Unit: mm

	LM rail dimensions							Basic load rating		Static permissible moment kN-m*					Mass	
	Width			Height	Pitch		Length*	C	C_0	M_A		M_B		M_C	LM block	LM rail
	W_1 0 -0.05	W_2	W_3	M_1	F	$d_1 \times d_2 \times h$	Max	kN	kN	1 block	Double blocks	1 block	Double blocks	1 block	kg	kg/m
	70	32.5	28	37	52.5	11×17.5×14	3090	115	256	6.13	32.2	6.13	32.2	10.2	6.3	18.6
	85	40	32	43	60	14×20×17	3060	167	366	10.8	57	10.8	57	17.5	11.0	26.7
	100	50	38	54	75	16×23×20	3000	278	599	22.7	120	22.7	120	33.9	21.6	35.9
	130	65	52	71	90	18×26×22	3000	497	990	45.3	239	45.3	239	74.2	41.7	61.0
	150	75	60	77	105	24×35×28	3000	601	1170	60	319	60	319	101.6	65.1	74.4

Note1) Model SRW is attached with "SS" as standard.
Note2) This model number indicates that a single-rail unit constitutes one set. (i.e., required number of sets when 2 rails are used in parallel is 2 at a minimum.)
Note3) For the standard LM rail length, see Table4 on A1-432.
Note4) The greasing hole on the top face and the pilot hole of the side nipple** are not drilled through in order to prevent foreign material from entering the block.
For details, see A1-433.
Note5) The removing/mounting jig is not provided as standard. When desiring to use it, contact THK.

The maximum length under "Length*" indicates the standard maximum length of an LM rail. (See A1-432.)
Static permissible moment*: 1 block: static permissible moment value with 1 LM block
Double blocks: static permissible moment value with 2 blocks closely contacting with each other

Options⇒A1-457

Standard Length and Maximum Length of the LM Rail

Table4 shows the standard lengths and the maximum lengths of model SRW variations. If the maximum length of the desired LM rail exceeds them, jointed rails will be used.
For the G dimension when a special length is required, we recommend selecting the corresponding G value from the table. The longer the G dimension is, the less stable the G area may become after installation, thus causing an adverse impact to accuracy.
If desiring connected use of this model, be sure to indicate the overall length so that we can manufacture the product without leaving a level difference in the joint.

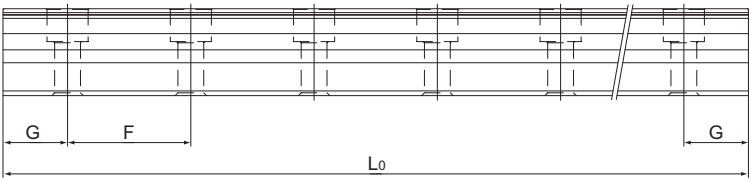

Table4 Standard Length and Maximum Length of the LM Rail for Model SRW

Unit: mm

Model No.	SRW 70	SRW 85	SRW 100	SRW 130	SRW 150
LM rail standard length (L_0)	570 675 780 885 990 1095 1200 1305 1410 1515 1620 1725 1830 1935 2040 2145 2250 2355 2460 2565 2670 2775 2880 2985	780 900 1020 1140 1260 1380 1500 1620 1740 1860 1980 2100 2220 2340 2460 2580 2700 2820 2940 3060	1270 1570 2020 2620	1530 1890 2250 2610	1340 1760 2180 2600
Standard pitch F	52.5	60	75	90	105
G	22.5	30	35	45	40
Max length	3090	3060	3000	3000	3000

Note1) The maximum length varies with accuracy grades. Contact THK for details.
Note2) If jointed rails are not allowed and a greater length than the maximum values above is required, contact THK.

Greasing Hole

[Greasing Hole for Model SRW]

Model SRW allows lubrication from both the side and top faces of the LM block. The greasing hole of standard types is not drilled through in order to prevent foreign material from entering the LM block. When using the greasing hole, contact THK.

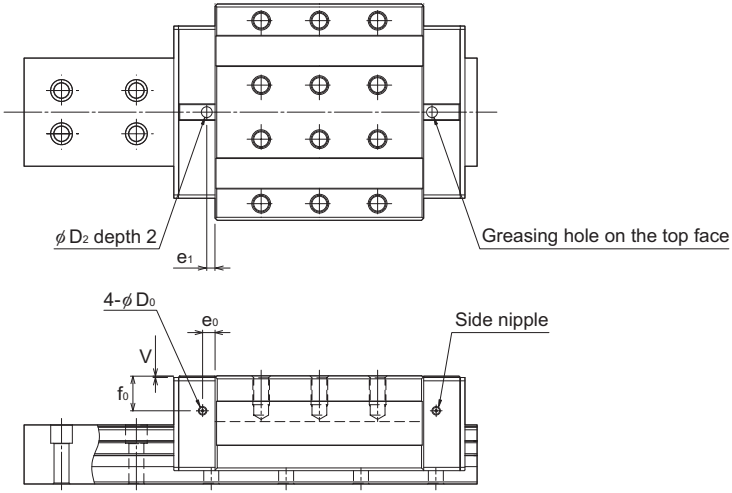

Unit: mm

Model No.		Pilot hole for side nipple			Applicable nipple	Greasing hole on the top face			
		e_0	f_0	D_0		D_2	(O-ring)	V	e_1
SRW	70	7	17	5.2	M6F	13	(P10)	0.4	2.7
	85	9	18.5	5.2	M6F	13	(P10)	0.4	9.9
	100	9	23.5	5.2	M6F	13	(P10)	0.4	10.1
	130	15	42	8.2	PT1/8	13	(P10)	0.4	10
	150	15	53	8.2	PT1/8	13	(P10)	0.4	10

Note) The greasing interval is longer than that of full-roller types because of the roller cage effect. However, the actual greasing interval may vary depending on the service environment, such as a high load and high speed. Contact THK for details.

Designing the Guide System

THK offers various types of LM Guides in order to meet diversified conditions. Supporting ordinary horizontal mount, vertical mount, inverted mount, slant mount, wall mount and single-axis mount, the wide array of LM Guide types makes it easy to achieve a linear guide system with a long service life and high rigidity while minimizing the required space for installation.
It is necessary to consider the position in the LM block where the grease nipple or the piping joint should be attached according to the mounting orientation.
If the mounting orientation is other than horizontal use, the lubricant may not reach the raceway completely. Be sure to let THK know the mounting orientation and the exact position in each LM block where the grease nipple or the piping joint should be attached.
Even with an LM Guide with seals, the internal lubricant gradually seeps out during operation. Therefore, the system needs to be lubricated at an appropriate interval according to the conditions.
For the mounting orientation and the lubrication, see A1-12 and A24-2, respectively.

Examples of Arrangements of the Guide System

The following are representative guide systems and arrangements when installing the LM Guide. (For indication of the reference surface, see A1-455.)

Double-rail configuration when high rigidity is required in all directions

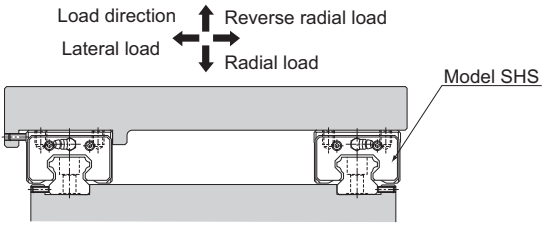

Double-rail configuration when high rigidity is required in the radial direction

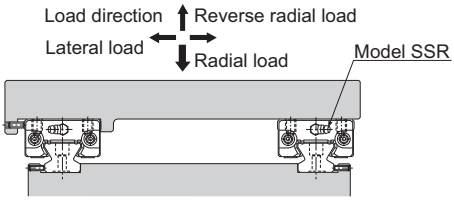

When high rigidity is required in all directions and the installation space is limited in height

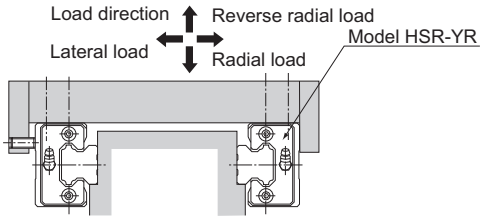

Single-rail configuration

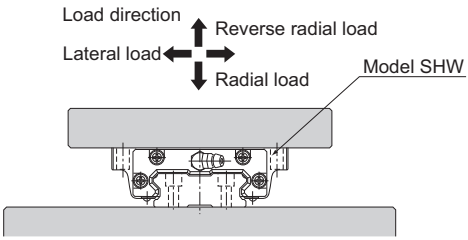

When the minimum possible height of the equipment is allowed (Adjustable preload type)

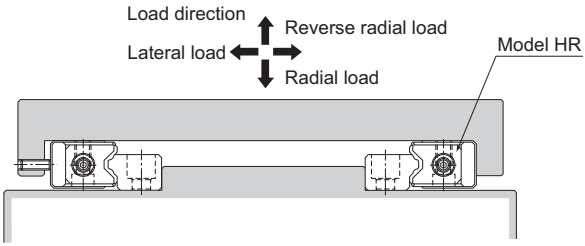

When a medium load is applied and the mounting surface is rough (Preload, self-adjusting type)

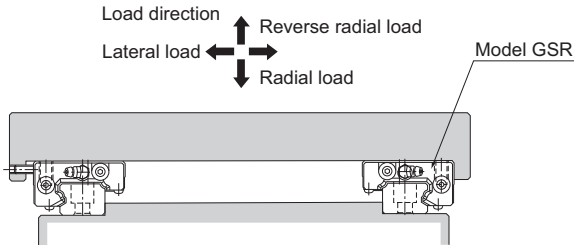

Single-rail configuration	Triple-rail configuration
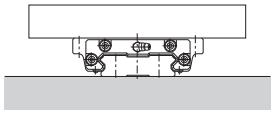	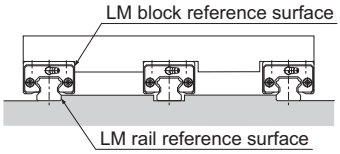

Double-rail configuration

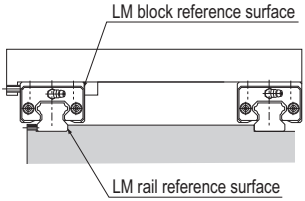

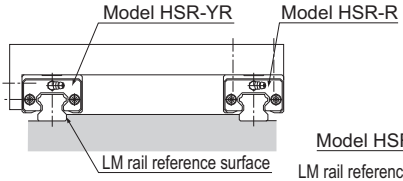

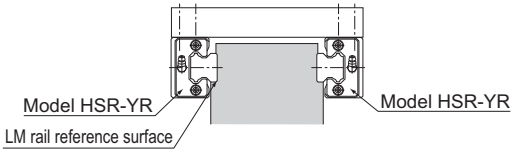

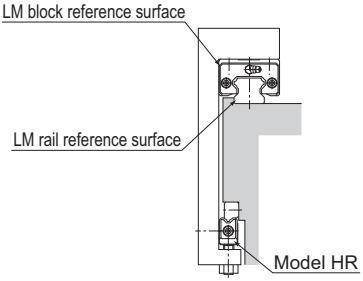

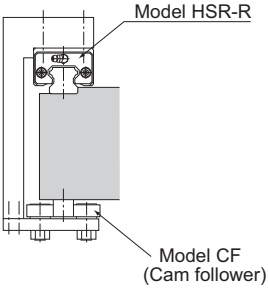

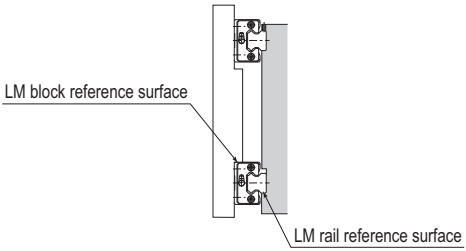

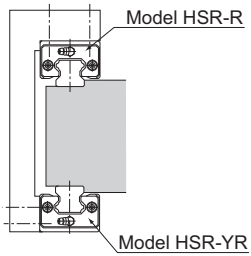

Multi-rail configuration

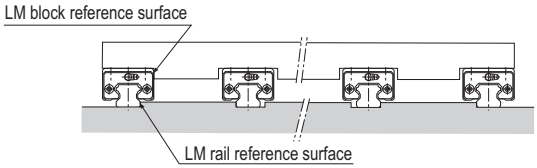

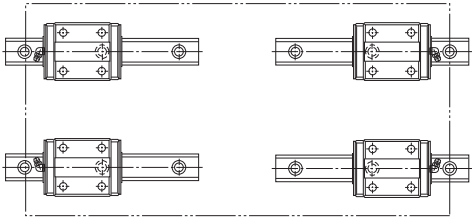

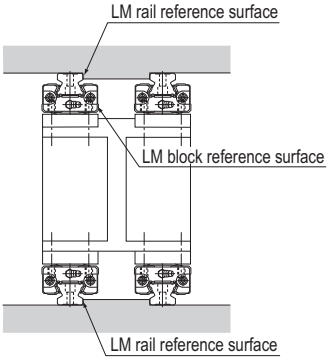

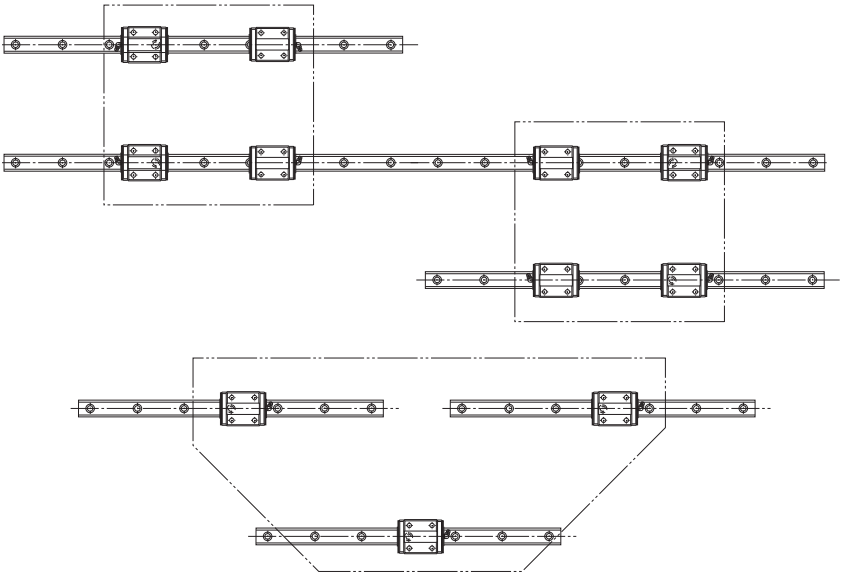

Method for Securing an LM Guide to Meet the Conditions

LM Guides are categorized into groups of types by mounting space and structure: a group of types to be mounted with bolts from the top, and another of types to be mounted from the bottom. LM rails are also divided into types secured with bolts and those secured with clamps (model JR). This wide array of types allows you to make a choice according to the application.
There are several ways of mounting the LM Guide as shown in Table1. When the machine is subject to vibrations that may cause the LM rail(s) or LM blocks to loosen, we recommend the securing method indicated by Fig.1 on A1-440. (If 2 or more rails are used in parallel, only the LM block on the master rail should be secured in the crosswise direction.) If this method is not applicable for a structural reason, hammer in knock pins to secure the LM block(s) as shown in Table2 on A1-440 When using knock pins, machine the top/bottom surfaces of the LM rail by 2 to 3 mm using a carbide end mill before drilling the holes since the surfaces are hardened.

Table1 Major Securing Methods on the Master-rail Side

(a) Secured only with side reference surfaces	(b) Secured with set screws
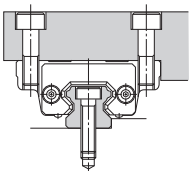	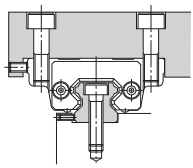

(c) Secured with a presser plate	(d) Secured with tapered gibs
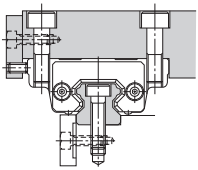	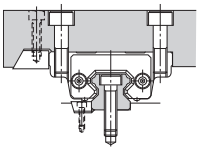

(e) Secured with pins
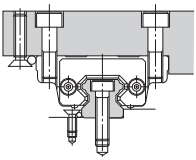

Table2 Major Securing Methods on the Subsidiary-rail Side

(a) Secured only with the side reference surface of the rail	(b) Secured only with the side reference surface of the block
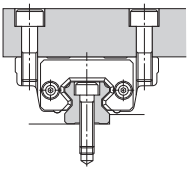	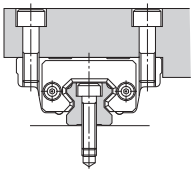
(c) Secured without a side reference surface	**(d) Secured with dowel pins**
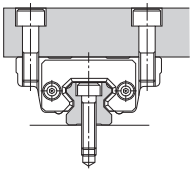	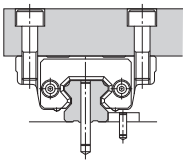

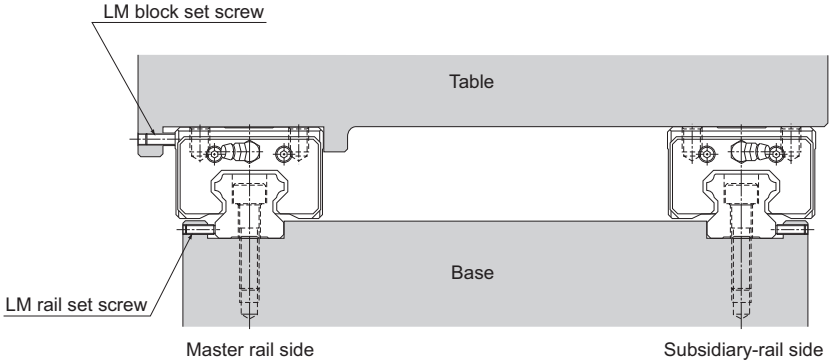

Fig.1 When the Machine Receives Vibrations or Impact

Designing a Mounting Surface

Designing a Mounting Surface

If particularly high accuracy is required for the machine to which an LM Guide is to be mounted, it is necessary to mount the LM rail with high accuracy. To achieve the desired accuracy, be sure to design the mounting surface while taking the following points into account.

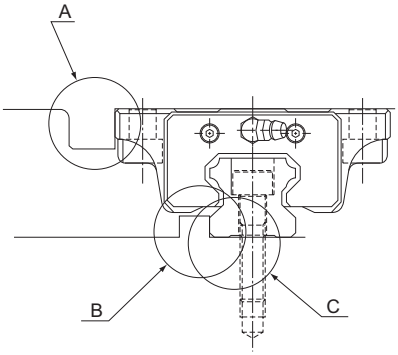

[Corner Shape]

If the corner on the surface on which the LM rail or LM block is to be mounted is machined to be shaped R, which is greater than the chamfer dimension of the LM rail or LM block, then the rail or the block may not closely contact its reference surface. Therefore, when designing a mounting surface, it is important to carefully read the description on the “corner shape” of the subject model . (Fig.2)

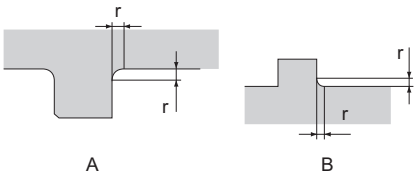

Fig.2

[Perpendicularity with the Reference Surface]

If the perpendicularity between the base mounting surface for the LM rail or the LM block and the reference surface is not accurate, the rail or the block may not closely contact the reference surface. Therefore, it is important to take into account an error of the perpendicularity between the mounting surface and the reference surface . (Fig.3)

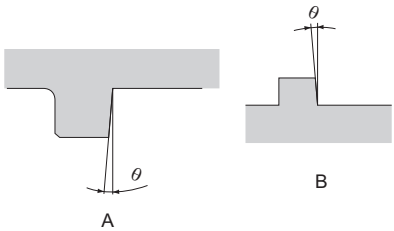

Fig.3

[Dimensions of the Reference Surface]

When designing the reference surface, be sure to take into account the height and the thickness of the datum area. If the datum area is too high, it may interfere with the LM block. If it is too low, the LM rail or the LM block may not closely contact the reference-surface depending on the chamfer of the rail or the block. Additionally, if the datum area is too thin, the desired accuracy may not be obtained due to poor rigidity of the datum area when a lateral load is applied or when performing positioning using a lateral mounting bolt . (Fig.4)

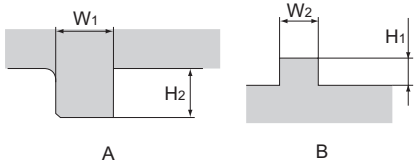

Fig.4

[Dimensional Tolerance between the Reference Surface and the Mounting Hole]

If the dimensional tolerance between the reference surface of the LM rail or the LM block and the mounting hole is too large, the rail or the block may not closely contact the reference surface when mounted on the base.
Normally, the tolerance should be within ±0.1 mm depending on the model. (Fig.5)

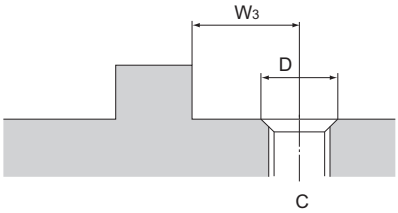

Fig.5

[Chamfer of the Tapped Mounting Hole]

To mount the LM rail, the mounting surface needs to be tapped and the tapped hole has to be chamfered. If the chamfer of the tapped hole is too large or too small, it may affect the accuracy . (Fig.6)

Guidelines for the chamfer dimension:
Chamfer diameter D = nominal diameter of the bolt + pitch

Example: Chamfer diameter D with M6 (pitch):
D = 6 + 1 = 7

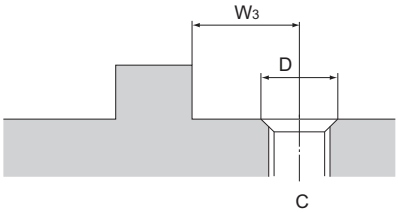

Fig.6

Shoulder Height of the Mounting Base and the Corner Radius

Normally, the mounting base for the LM rail and the LM block has a reference-surface on the side face of the shoulder of the base in order to allow easy installation and highly accurate positioning. The height of the datum shoulder varies with model numbers. See **A1-443** to **A1-449** for details.

The corner of the mounting shoulder must be machined to have a recess, or machined to be smaller than the corner radius "r," to prevent interference with the chamfer of the LM rail or the LM block. The corner radius varies with model numbers. See **A1-443** to **A1-449** for details.

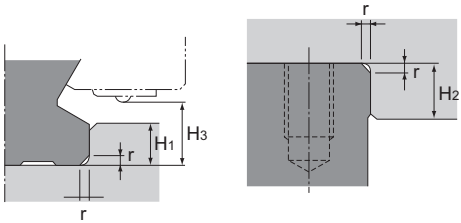

Shoulder for the LM Rail

Shoulder for the LM Block (LM casing)

Fig.7

[Models SR, SR-M1]

Unit: mm

Model No.	Corner radius r(max)	Shoulder height for the LM rail H_1	Maximum shoulder height for the LM block H_2	H_3
15	0.5	3.8	4	5.8
20	0.5	5	5	6
25	1	5.5	5	7
30	1	8	6	9.5
35	1	9	6	11.5
45	1	10	8	12.5
55	1.5	11	8	13.5
70	1.5	12	10	15
85	1.2	8	12	18.5
100	1.2	10	15	19
120	1.2	12	20	15
150	1.2	12	20	22

[Model SR-MS]

Unit: mm

Model No.	Corner radius r(max)	Shoulder height for the LM rail H_1	Shoulder height for the LM block H_2	H_3
15	0.5	3.8	4	4.5
20	0.5	5	5	6

[Model JR]

Unit: mm

Model No.	Corner radius r(max)	Shoulder height for the LM block H_2
25	1	5
35	1	6
45	1	8
55	1.5	10

[Model CSR]

Unit: mm

Model No.	Corner radius r(max)	Shoulder height for the LM rail H_1	H_3
15	0.5	3	3.5
20	0.5	3.5	4
25	1	5	5.5
30	1	5	7
35	1	6	7.5
45	1	8	10

[Model NSR-TBC]

Unit: mm

Model No.	Corner radius r(max)	Shoulder height for the LM rail H_1	Shoulder height for the LM block H_2	H_3
20	1	5	5	5.5
25	1	6	6	6.5
30	1	7	6	9
40	1	7	8	10.5
50	1	7	8	8
70	1	7	10	9.5

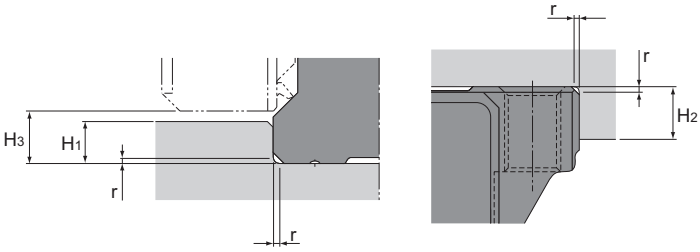

Shoulder for the LM Rail　　Shoulder for the LM Block

Fig.8

[Model SHS]

Unit: mm

Model No.	Corner radius r(max)	Shoulder height for the LM rail H_1	Shoulder height for the LM block H_2	H_3
15	0.5	2.5	4	3
20	0.5	3.5	5	4.6
25	1	5	5	5.8
30	1	5	5	7
35	1	6	6	7.5
45	1	7.5	8	8.9
55	1.5	10	10	12.7
65	1.5	15	10	19

[Model SCR]

Unit: mm

Model No.	Corner radius r(max)	Shoulder height for the LM rail H_1	H_3
15	0.5	2.5	3
20	0.5	3.5	4.6
25	1	5	5.8
30	1	5	7
35	1	6	7.5
45	1	7.5	8.9
65	1.5	15	19

[Models SVR/SVS and NR/NRS-X]

Unit: mm

Model No.	Corner radius r(max)	Shoulder height for the LM rail H_1	Shoulder height for the LM block H_2	H_3
25	0.5	4	5	5.5
30	1	5	5	7
35	1	6	6	9
45	1	8	8	11.6
55	1.5	10	10	14
65	1.5	10	10	15

Note) If the optional side scraper or protector is attached, dimensions H1 and H3 differ from that without the options. For the dimensions after they are attached, see A1-466 to A1-467.

[Models NR/NRS]

Unit: mm

Model No.	Corner radius r(max)	Shoulder height for the LM rail H_1	Shoulder height for the LM block H_2	H_3
75	1.5	12	12	15
85	1.5	14	14	17
100	2	16	16	20

[Model MX]

Unit: mm

Model No.	Corner radius for the LM rail r(max)	Shoulder height for the LM rail H_1	H_3
5	0.1	1.2	1.5
7W	0.1	1.7	2

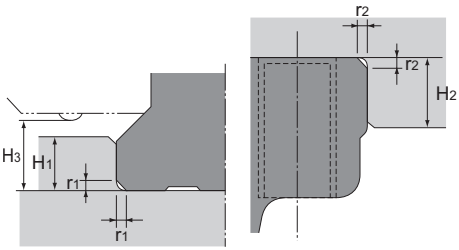

Shoulder for the LM Rail　　Shoulder for the LM Block

Fig.9

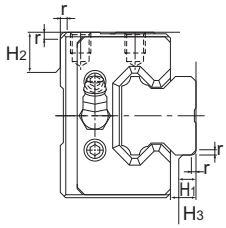

Fig.10

[Models HSR, HSR-M1 and HSR-M2]

Unit: mm

Model No.	Corner radius for the LM rail r_1(max)	Corner radius for the LM block r_2(max)	Shoulder height for the LM rail H_1	Shoulder height for the LM block H_2	H_3
8	0.3	0.5	1.6	6	2.1
10	0.3	0.5	1.7	5	2.2
12	0.8	0.5	2.6	4	3.1
15	0.5	0.5	3	4	4.7
20	0.5	0.5	3.5	5	4
25	1	1	5	5	5.5
30	1	1	5	5	7
35	1	1	6	6	7.5
45	1	1	8	8	10
55	1.5	1.5	10	10	13
65	1.5	1.5	10	10	14
85	1.5	1.5	12	14	16
100	2	2	16	16	20
120	2.5	2.5	17	18	20
150	2.5	2.5	20	20	22

[Model HCR]

Unit: mm

Model No.	Corner radius for the LM rail r_1(max)	Corner radius for the LM block r_2(max)	Shoulder height for the LM rail H_1	Maximum shoulder height for the LM block H_2	H_3
12	0.8	0.5	2.6	6	3.1
15	0.5	0.5	3	4	4.8
25	1	1	5	5	7
35	1	1	6	6	8.5
45	1	1	8	8	11.5
65	1.5	1.5	10	10	15

[Model HMG]

Unit: mm

Model No.	Corner radius for the LM rail r_1(max)	Corner radius for the LM block r_2(max)	Shoulder height for the LM rail H_1	Maximum shoulder height for the LM block H_2	H_3
15	0.5	0.5	3	4	3.5
25	1	1	5	5	5.5
35	1	1	6	6	7.5
45	1	1	8	8	11
65	1.5	1.5	10	10	16

[Model EPF]

Unit: mm

Model No.	Corner radius for the LM rail r_1(max)	Corner radius for the LM block r_2(max)	Shoulder height for the LM rail H_1	Maximum shoulder height for the LM block H_2	H_3
7M	0.2	0.4	1	3	1.5
9M	0.2	0.6	1	5	1.5
12M	0.5	0.6	1.5	6	2
15M	0.5	0.8	2.5	6.8	3

[Model HSR-YR]

Unit: mm

Model No.	Corner radius r(max)	Shoulder height for the LM rail H_1	Shoulder height for the LM block H_2	H_3
15	0.5	3	4	3.5
20	0.5	3.5	5	4
25	1	5	5	5.5
30	1	5	5	7
35	1	6	6	7.5
45	1	8	8	10
55	1.5	10	10	13
65	1.5	10	10	14

[Model HSR-M1VV]

Unit: mm

Model No.	Corner radius for the LM rail r_1(max)	Corner radius for the LM block r_2(max)	Shoulder height for the LM rail H_1	Maximum shoulder height for the LM block H_2	H_3
15	0.5	0.5	3	4	4.3

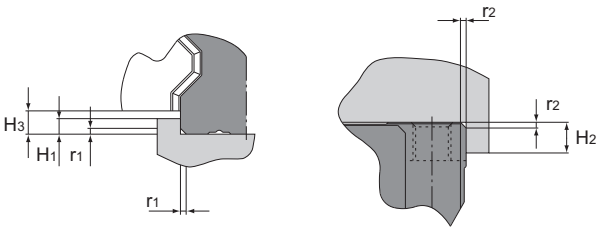

Shoulder for the LM Rail　　Shoulder for the LM Block

Fig.11

[Model SRG]

Unit: mm

Model No.	Corner radius for the LM rail r_1(max)	Corner radius for the LM block r_2(max)	Shoulder height for the LM rail H_1	Shoulder height for the LM block H_2	H_3
15	0.5	0.5	2.5	4	4
20	0.5	0.5	3.5	5	4.6
25	1	1	4	5	4.5
30	1	1	4.5	5	5
35	1	1	5	6	6
45	1.5	1.5	6	8	8
55	1.5	1.5	8	10	10
65	1.5	2	9	10	11.5
85	1.5	1.5	12	14	16
100	2	2	12	16	16

Note) If the optional side scraper or protector is attached, dimensions H_1 and H_3 differ from that without the options. For the dimensions after they are attached, see A1-466 to A1-467.

[Model SRN]

Unit: mm

Model No.	Corner radius for the LM rail r_1(max)	Corner radius for the LM block r_2(max)	Shoulder height for the LM rail H_1	Shoulder height for the LM block H_2	H_3
35	1	1	5	6	6
45	1.5	1.5	6	8	7
55	1.5	1.5	8	10	10
65	1.5	2	8	10	10

[Model SRW]

Unit: mm

Model No.	Corner radius for the LM rail r_1(max)	Corner radius for the LM block r_2(max)	Shoulder height for the LM rail H_1	Shoulder height for the LM block H_2	H_3
70	1.5	1.5	6	8	8
85	1.5	1.5	8	10	10
100	1.5	2	9	10	11.5
130	1.5	1.5	12	14	16
150	2	2	12	16	16

Point of Design

Designing a Mounting Surface

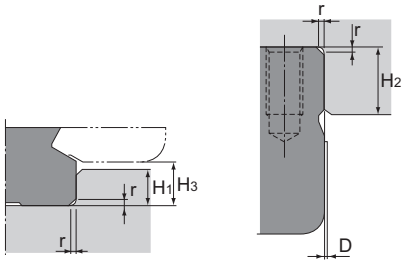

Shoulder for the LM Rail　　Shoulder for the LM Block

Fig.12

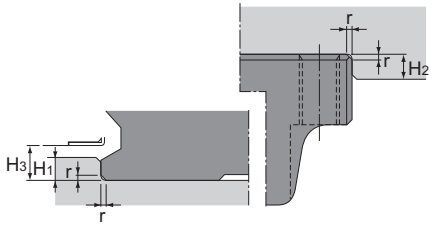

Shoulder for the LM Rail　　Shoulder for the LM Block

Fig.13

[Model SSR]

Unit: mm

Model No.	Corner radius r(max)	Shoulder height for the LM rail H_1	Maximum shoulder height for the LM block H_2	H_3	D
15 X	0.5	3.8	5.5	4.5	0.3
20 X	0.5	5	7.5	6	0.3
25 X	1	5.5	8	6.8	0.4
30 X	1	8	11.5	9.5	0.4
35 X	1	9	16	11.5	0.4

Note) When closely contacting the LM block with the datum shoulder, the resin layer may stick out from the overall width of the LM block by the dimension D. To avoid this, machine the datum shoulder to have a recess or limit the datum shoulder's height below the dimension H_2.

[Models SHW and HRW]

Unit: mm

Model No.	Corner radius r(max)	Shoulder height for the LM rail H_1	Shoulder height for the LM block H_2	H_3
12	0.5	1.5	4	2
14	0.5	1.5	5	2
17	0.4	2	4	2.5
21	0.4	2.5	5	3
27	0.4	2.5	5	3
35	0.8	3.5	5	4
50	0.8	3	6	3.4
60	1	5	8	6.5

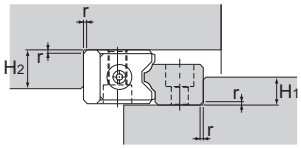

Fig.14

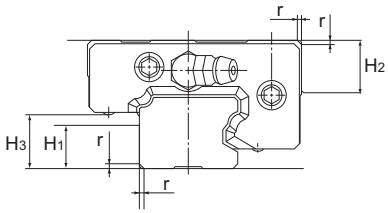

Fig.15

[Model HR]

Unit: mm

Model No.	Corner radius r(max)	Shoulder height for the LM rail H_1	Shoulder height for the LM block H_2
918	0.3	5	6
1123	0.5	6	7
1530	0.5	8	10
2042	0.5	11	15
2555	1	13	18
3065	1	16	20
3575	1	18	26
4085	1.5	21	30
50105	1.5	26	32
60125	1.5	31	40

[Model GSR]

Unit: mm

Model No.	Corner radius r(max)	Shoulder height for the LM rail H_1	Shoulder height for the LM block H_2	H_3
15	0.6	7	7	8
20	0.8	9	8	10.4
25	0.8	11	11	13.2
30	1.2	11	13	15
35	1.2	13	14	17.5

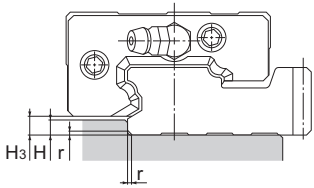

Fig.16

[Model GSR-R]

Unit: mm

Model No.	Corner radius r(max)	Shoulder height for the LM rail H	H_3
25	0.8	4	4.5
30	1.2	4	4.5
35	1.2	4.5	5.5

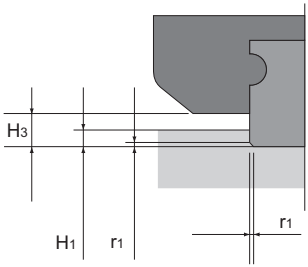

Shoulder for the LM Rail

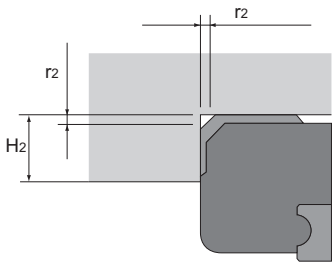

Shoulder for the LM Block

Fig.17

[Model SRS]

Unit: mm

Model No.	Corner radius for the LM rail r_1(max)	Corner radius for the LM block r_2(max)	Shoulder height for the LM rail H_1	Shoulder height for the LM block H_2	H_3
5 M/N	0.1	0.3	1.2	2	1.5
5 WM/WN	0.1	0.2	1.2	2.5	1.5
7 S/M/N	0.1	0.2	0.9	3.3	1.3
7 WS/WM/WN	0.1	0.1	1.4	3.8	1.8
9 XS/XM/XN	0.1	0.3	1.1	4.5	1.5
9 WS/WM/WN	0.1	0.5	2.5	4.9	2.9
12 S/M/N	0.3	0.2	1.5	5.7	2
12 WS/WM/WN	0.3	0.3	2.5	5.7	3
15 S/M/N	0.3	0.4	2.2	6.5	2.7
15 WS/WM/WN	0.3	0.3	2.2	6.5	2.7
20 M	0.3	0.5	3	8.7	3.4
25 M	0.5	0.5	4.5	10.5	5

[Model RSR]

Unit: mm

Model No.	Corner radius for the LM rail r_1(max)	Corner radius for the LM block r_2(max)	Shoulder height for the LM rail H_1	Shoulder height for the LM block H_2	H_3
2 N	0.1	0.3	0.6	2.3	0.7
2 WN	0.1	0.3	0.9	2.9	1
3 M/N/WM/WN	0.1	0.3	0.8	1.2	1
14 WVM	0.3	0.3	3.2	5	3.5

[Model RSR-M1]

Unit: mm

Model No.	Corner radius for the LM rail r_1 (max)	Corner radius for the LM block r_2 (max)	Shoulder height for the LM rail H_1	Shoulder height for the LM block H_2	H_3
9 M1K/M1N	0.3	0.5	1.9	3	2.2
9 M1WV/M1WN	0.1	0.1	3.9	3	4.2
12 M1V/M1N	0.3	0.3	1.4	4	3
12 M1WV/M1WN	0.3	0.3	3.7	4	4
15 M1V/M1N	0.3	0.3	2.3	5	4
15 M1WV/M1WN	0.3	0.3	3.7	5	4
20 M1V/M1N	0.5	0.5	5.5	5	7.5

Permissible Error of the Mounting Surface

The LM Guide allows smooth straight motion through its self-aligning capability even when there is a slight distortion or error on the mounting surface.

[Error Allowance in the Parallelism between Two Rails]

A mounting surface error of the LM Guide may affect the service life. The following tables show approximate error allowances in parallelism (P) between two rails in general use.

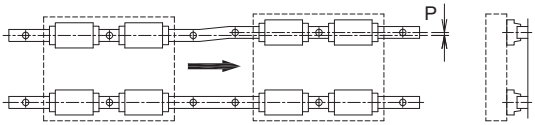

Fig.18 Error Allowance in Parallelism (P) between Two Rails

[Models SHS, SCR, HSR, CSR, HSR-M1, HSR-M2, and HSR-M1VV]

Unit: μm

Model No.	Normal clearance	Clearance C1	Clearance C0
8	13	10	—
10	16	12	—
12	20	15	—
15	25	18	—
20	25	20	18
25	30	22	20
30	40	30	27
35	50	35	30
45	60	40	35
55	70	50	45
65	80	60	55
85	90	75	70
100	100	90	85
120	120	110	100
150	140	130	115

[Model JR]

Unit: μm

Model No.	—
25	100
35	200
45	300
55	400

[Models SSR, SR, SR-M1]

Unit: μm

Model No.	Normal clearance	Clearance C1	Clearance C0
15	35	25	—
20	40	30	25
25	50	35	30
30	60	40	35
35	70	50	45
45	80	60	55
55	100	70	65
70	110	80	65
85	120	90	80
100	130	100	90
120	140	110	100
150	150	120	110

[Models SVR, NR-X and NR]

Unit: μm

Model No.	Normal clearance	Clearance C1	Clearance C0
25	21	15	14
30	28	21	19
35	35	25	21
45	42	28	25
55	49	35	32
65	56	42	39
75	60	47	44
85	63	53	49
100	70	63	60

[Models SVS, NRS-X and NRS]

Unit: μm

Model No.	Normal clearance	Clearance C1	Clearance C0
25	15	11	10
30	20	15	14
35	25	18	15
45	30	20	18
55	35	25	23
65	40	30	28
75	43	34	31
85	45	38	35
100	50	45	43

[Models SHW and HRW]

Unit: μm

Model No.	Normal clearance	Clearance C1	Clearance C0
12	13	10	—
14	16	12	—
17	20	15	—
21	25	18	—
27	25	20	—
35	30	22	20
50	40	30	27
60	50	35	30

[Models SRS, RSR, RSR-W and RSR-M1]

Unit: μm

Model No.	Normal clearance	Clearance C1
2	2	—
3	2	—
5	2	—
7	3	—
9	4	3
12	9	5
14	10	6
15	10	6
20	13	8
25	15	10

[Model SR-MS]

Unit: μm

Model No.	Clearance CS
15	8
20	8

[Model HR]

Unit: μm

Model No.	Normal clearance	Clearance C1	Clearance C0
918	10	7	—
1123	14	8	—
1530	18	12	—
2042	20	15	14
2555	35	24	20
3065	38	26	22
3575	42	28	24
4085	50	35	30
50105	55	42	38
60125	65	55	50

[Models GSR and GSR-R]

Unit: μm

Model No.	—
15	30
20	40
25	50
30	60
35	70

[Model NSR-TBC]

Unit: μm

Model No.	Normal clearance	Clearance C1
20	50	40
25	70	50
30	80	60
40	90	70
50	110	80
70	130	90

[Flatness of the Mounting Surface]

The following tables show errors in flatness of the mounting surface with models SRS, RSR and RSR-W that will not affect their service lives in normal operation. Note that if the flatness of the mounting surface is poorly established for models other than those above, it may affect the service life.

[Model SRS]

Unit: mm

Model No.	Flatness error
5	0.015/200
7	0.025/200
9	0.035/200
12	0.050/200
15	0.060/200
20	0.070/200
25	0.070/200

[Model SR-MS]

Unit: mm

Model No.	Flatness error
15	0.020/200
20	0.020/200

[Models RSR, RSR-W and RSR-M1]

Unit: mm

Model No.	Flatness error
2	0.012/200
3	0.012/200
9	0.035/200
12	0.050/200
14	0.060/200
15	0.060/200
20	0.110/200

Note 1) As many factors can affect the mounting precision, we recommend using values 70% or less than those shown.
Note 2) The figures shown apply to normal clearances. When using two or more rails with clearance C1, we recommend using 50% or less of the values shown.

[Error Allowance in Vertical Level between Two Rails]

The values in the tables A1-453 – A1-454 indicate error tolerances in the vertical level between two rails per axis-to-axis distance of 500 mm and are proportionate to axis-to-axis distances (200 mm for model SRS and RSR).

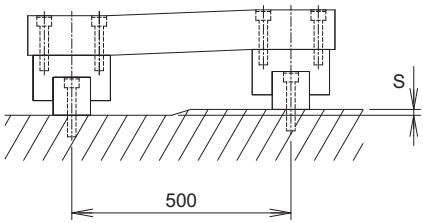

Fig.19 Error Allowance in Vertical Level (S) between Two Rails

[Models SHS, HSR, SCR, CSR, HSR-M1, HSR-M2 and HSR-M1VV]

Unit: μm

Model No.	Normal clearance	Clearance C1	Clearance C0
8	40	11	—
10	50	16	—
12	65	20	—
15	130	85	—
20	130	85	50
25	130	85	70
30	170	110	90
35	210	150	120
45	250	170	140
55	300	210	170
65	350	250	200
85	400	290	240
100	450	330	280
120	500	370	320
150	550	410	360

[Models SSR, SR, SR-M1]

Unit: μm

Model No.	Normal clearance	Clearance C1	Clearance C0
15	180	100	—
20	180	100	80
25	200	120	100
30	240	150	120
35	300	210	170
45	360	240	200
55	420	300	250
70	480	350	300
85	540	420	350
100	600	480	400
120	720	540	450
150	780	600	500

[Models SVR, NR-X and NR]

Unit: μm

Model No.	Normal clearance	Clearance C1	Clearance C0
25	65	43	35
30	85	55	45
35	105	75	60
45	125	85	70
55	150	105	85
65	175	125	100
75	188	135	110
85	200	145	120
100	225	165	140

[Model JR]

Unit: μm

Model No.	—
25	400
35	500
45	800
55	1000

[Models SVS, NRS-X and NRS]

Unit: μm

Model No.	Normal clearance	Clearance C1	Clearance C0
25	91	60	49
30	119	77	63
35	147	105	84
45	175	119	98
55	210	147	119
65	245	175	140
75	263	189	154
85	280	203	168
100	315	231	196

[Models SRS, SRS-W, RSR, RSR-W and RSR-M1]

Unit: μm

Model No.	Normal clearance	Clearance C1
3	15	—
5	20	—
7	25	—
9	35	6
12	50	12
14	60	20
15	60	20
20	70	30
25	80	40

[Models SHW and HRW]

Unit: μm

Model No.	Normal clearance	Clearance C1	Clearance C0
12	40	11	—
14	50	16	—
17	65	20	—
21	130	85	—
27	130	85	—
35	130	85	70
50	170	110	90
60	210	150	120

[Model HR]

Unit: μm

Model No.	Normal clearance	Clearance C1	Clearance C0
918	45	15	—
1123	50	20	—
1530	90	60	—
2042	90	60	50
2555	150	100	85
3065	165	110	95
3575	175	120	100
4085	210	150	120
50105	245	175	140
60125	280	200	170

[Models GSR and GSR-R]

Unit: μm

Model No.	—
15	240
20	300
25	360
30	420
35	480

[Model NSR-TBC]

Unit: μm

Model No.	Normal clearance	Clearance C1
20	300	210
25	360	240
30	420	270
40	540	360
50	600	420
70	660	480

[Model SR-MS]

Unit: mm

Model No.	Clearance CS
15	0.020/200
20	0.020/200

Marking on the Master LM Guide and Combined Use

[Marking on the Master LM Guide]

All LM rails mounted on the same plane are marked with the same serial number. The LM rail marked with “KB” after the serial number is the master LM rail. The LM block on the master LM rail has its reference surface finished to a designated precision, allowing it to serve as the positioning reference for tables. (See Fig.20)
Normal grade LM Guides are not marked with “KB.” Therefore, any one of the LM rails having the same serial number can be used as the master LM rail.

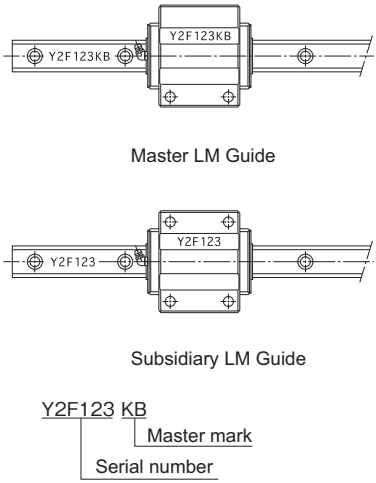

Fig.20 Master and Subsidiary LM Guides (E.g. Model HSR-B)

[Markings on the Reference Surface]

In the LM Guide, the reference surface of the LM block is opposite the surface marked with the THK logo, and that of the LM rail is on the surface marked with a line (see Fig.21). If it is necessary to reverse the reference surface of the LM rail and block, or if the grease nipple must be oriented in the opposite direction, specify it.

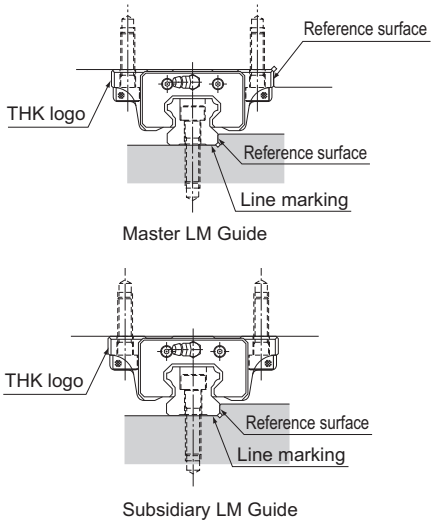

Fig.21 Markings on the Reference Surface

[Serial Number Marking and Combined Use of an LM Rail and LM Blocks]

An LM rail and LM block(s) used in combination must have the same serial number. When removing an LM block from the LM rail and reinstalling the LM block, make sure that they have the same serial number and the numbers are oriented in the same direction. (Fig.22)

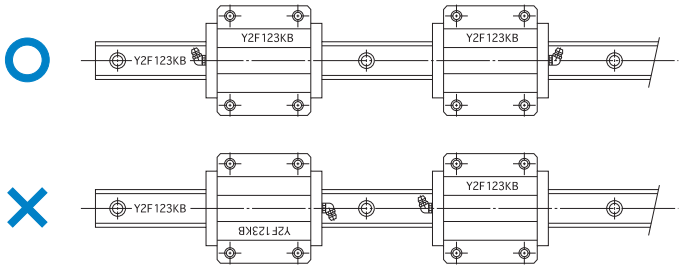

Fig.22 Serial Number Marking and Combined Use of an LM Rail and LM Blocks (E.g. Model HSR-A)

[Use of Jointed Rails]

When a long LM rail is ordered, two or more rails will be jointed together to the desired length. When jointing rails, make sure that the joint match marks shown in Fig.23 are correctly positioned.
When two LM Guides with connected rails are to be arranged in parallel to each other, the two LM Guides will be manufactured so that the two LM Guides are axisymmetrically aligned.

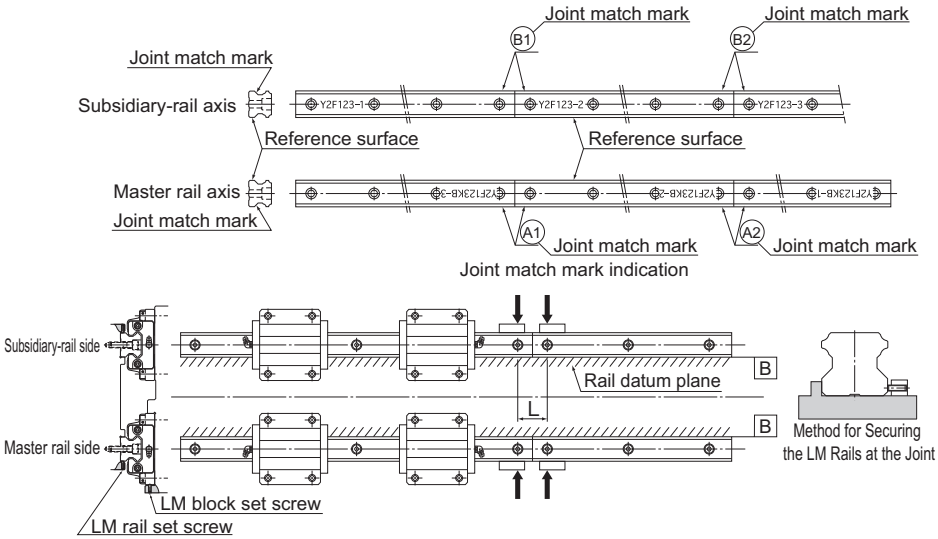

Fig.23 Use of Jointed Rails

LM Guide
Options

Options A1-457
Table of Supported Options by Models .. A1-458
Seal and Metal scraper..... A1-462
Laminated Contact Scraper LaCS..... A1-464
Side Scraper..... A1-466
Protector..... A1-467
Light-Resistance Contact Seal LiCS A1-469
Dimensions of Each Model with an Option Attached .. A1-470
- The LM Block Dimension (Dimension L) with LaCS and Seals Attached .. A1-470
- Incremental Dimension with Grease Nipple (When LaCS is Attached)... A1-478
- LM Block Dimension (Dimension L) with LiCS Attached .. A1-480
- Incremental Dimension with Grease Nipple (When LiCS is Attached) .. A1-481
- Maximum Seal Resistance A1-482
- Maximum resistance for LaCS A1-485
- Maximum resistance for LiCS A1-486
- Maximum resistance for the side scraper .. A1-486

QZ Lubricator..... A1-487
- LM Block Dimension (Dimension L) with QZ Attached .. A1-490

List of Parts Symbols..... A1-494
Dedicated Bellows..... A1-497
- Bellows A1-498

Dedicated LM Cover..... A1-510
- LM Cover..... A1-511

Cap C A1-512
Cap GC..... A1-513
Plate Cover SV Steel Tape SP A1-516
Lubrication Adapter..... A1-519
Removing/mounting Jig A1-520
End Piece EP A1-521

Model No. A1-522
- Model Number Coding..... A1-522
- Notes on Ordering..... A1-526

Precautions on Use A1-528
Precautions on Using the LM Guide..... A1-528
Precautions on Handling the LM Guide for Special Environment .. A1-530
- LM Guide for Medium-to-Low Vacuum A1-530
- Oil-Free LM Guide A1-530

Precautions on Using Options for the LM Guide .. A1-531
- QZ Lubricator for the LM Guide..... A1-531
- Laminated Contact Scraper LaCS, Side Scraper for LM Guides .. A1-531
- Light Contact Seal LiCS for LM Guides ... A1-532
- Cap GC A1-532

Table of Supported Options by Models

Model No.		Type	Contamination Protection										
			End seal	Side seal	Inner seal	End seal + Side seal (+ Inner seal)	Double seals + Side seal (+ Inner seal)	End seal + Side seal (+ Inner seal) + Metal scraper	Double seals + Side seal (+ Inner seal) + Metal scraper	LaCS	Side Scraper	End seal + Protector	Double seals + Protector
		Symbol	UU	—	—	SS	DD	ZZ	KK	HH	YY	JJ	TT
Caged Ball	SHS	15 to 65	○	○	○	○*1	○	○	○	○	—	—	—
	SSR	15 to 35	○*2	○	—	○	○	○	○	○	—	—	—
	SVR/SVS	25 to 65	○	○	○	○	○	○	○	○	○	○	○
	SHW	12,14	○	○	—	○	—	—	—	○	—	—	—
		17	○	○	—	○	○	○	○	○	—	—	—
		21 to 50	○	○	○	○	○	○	○	○	—	—	—
	SRS	5	○*3	—	—	—	—	—	—	—	—	—	—
		7	○*3	○	—	○	—	—	—	—	—	—	—
		9 to 25	○*3	○	—	○	—	—	—	○	—	—	—
	SCR	15 to 65	○	○	○	○	○	○	○	○	—	—	—
	EPF	7 to 15	—	—	—	—	—	—	—	—	—	—	—
Full-ball	HSR	8,10,12	○	—	—	—	—	—	—	—	—	—	—
		15,20,25	○	○	—	○*4	○	○*6	○*6	○	—	—	—
		30,35	○	○	—*6	○*4	○	○	○	○	—	—	—
		45,55,65	○	○	—*6	○*4	○	○	○	○	—	—	—
		85	○	○	—*6	○*4	○	○	○	○	—	—	—
		100,120,150	○	○	—	○*4	—	—	—	—	—	—	—
	SR	15 to 25	○	○	—	○	○	○*7	○*7	—	—	—	—
		30 to 70	○	○	—	○	○	○	○	—	—	—	—
		85 to 150	○	○	—	○	—	—	—	—	—	—	—
	NR-X/NRS-X	25 to 65	○	○	○	○	○	○	○	○	○	○	○
	NR/NRS	75,85	○	○	○	○	○	○	○	○	—	—	—
		100	○	○	○	○	○*8	○*8	○*8	○*8	—	—	—
	HRW	12,14	○*5	○	—	○	—	—	—	—	—	—	—
		17,21	○*5	—	—	—	○*9	○	○*9	—	—	—	—
		27 to 60	○*5	○	—	○	○	○	○	—	—	—	—

*1 Model SHS : Dedicated cap GC --- not applicable to only model SHS15
*2 Model SSR : Dedicated cap GC --- not applicable to model SSR15, Stainless steel LM Guides --- applicable to XV, XW
*3 Model SHW : GG, PP --- applicable to only model SHW21, Dedicated cap GC --- applicable to SHW35, 50
*4 Model SRS : Dedicated cap C --- applicable to models SRS9W, 12, 15, 20, 25
*5 Model SCR : Dedicated cap GC --- not applicable to only model SCR15
*6 Model HSR : ZZ, KK --- grease nipple cannot be attached to model HSR15,
GG --- applicable to model HSR25, Steel tape SP --- applicable to models HSR15 to 100, Dedicated cap C --- applicable to models HSR12 to 100,
Dedicated cap GC --- applicable to models HSR20 to 100,
Dedicated LM cover --- applicable to models HSR25 to 55,
Inner seal --- applicable to models HSR30 to 85
*7 Model SR : ZZ, KK --- grease nipple cannot be attached to models SR15, 20.
Dedicated cap C --- applicable to models SR15 to 85, dedicated cap GC --- applicable to models SR20 to 85,
Stainless steel LM Guides --- applicable to models SR15 to 35
*8 Model NR/NRS : DD,ZZ,KK and HH --- side nipple required for model NR/NRS100, Plate cover SV --- applicable to models NR/NRS75,
Dedicated cap GC --- not applicable to only model NR75

Options

Table of Supported Options by Models

Symbols in the table ○: Applicable △: Applicable depending on model (see note)
★: Recommended by THK (standard stock item)

												Lubrication		Corrosion Prevention	
	Low- resis-tance end seal	Low resistance end seal + side seal	LiCS	LiCS + Side seal (+ Inner seal)	Plate Cover SV	Steel tape SP	Dedicated cap C	Dedicated cap GC	Dedi-cated bellows	Dedicat-ed LM Cover	Tapped-hole LM Rail Type	QZ Lubrica-tor	End plate with/without side nipple	AP-HC, AP-C, AP-CF	Stainless Steel LM Guide
	LL	RR	GG	PP	Z	Z	—	—	—	TPH (dedicated for HSR)	K	QZ	—	F	M
	—	—	○	○	—	○	○	△*1	○	—	○	○	○	○	—
	—	—	○	○	—	○	○	△*2	○	—	○	○	○	○	△*2
	—	—	—	—	—	—	○	○	○	—	—	○	○	○	—
	—	—	—	—	—	—	○	—	—	—	—	○	—	○	○
	—	—	—	—	—	—	○	—	○	—	—	○	—	○	○
	—	—	△*3	△*3	—	—	○	△*3	○	—	—	○	—	○	—
	—	—	—	—	—	—	—	—	—	—	—	—	—	—	○
	—	—	—	—	—	—	—	—	—	—	—	○	—	—	○
	—	—	—	—	—	—	△*4	—	—	—	—	○	—	—	○
	—	—	—	—	—	—	○	△*5	—	—	○	○	○	○	—
	—	—	—	—	—	—	—	—	—	—	—	—	—	—	—
	—	—	—	—	—	—	△*6	—	—	—	—	—	—	○	○
	○	○	△*6	—	—	○	○	△*6	○	△*6	○	○	—	○	○
	○	○	—	—	—	○	○	○	○	○	○	○	—	○	○
	○	○	—	—	—	○	○	○	○	△*6	○	○	—	○	—
	—	—	—	—	—	○	○	○	○	—	—	○	—	○	—
	—	—	—	—	—	△*6	△*6	△*6	—	—	—	—	—	○	—
	○	○	—	—	—	○	○	△*7	○	—	○	—	—	○	○
	—	—	—	—	—	○	○	○	○	—	○	—	—	○	△*7
	—	—	—	—	—	—	△*7	△*7	—	—	—	—	—	○	—
	—	—	—	—	—	—	○	○	○	—	—	○	○	○	—
	—	—	—	—	△*8	○	○	△*8	○	—	—	—	○	○	—
	—	—	—	—	—	○	○	○	○	—	—	○	○	○	—
	—	—	—	—	—	—	△*9	—	—	—	—	—	—	○	○
	—	—	—	—	—	—	○	—	○	—	—	—	—	○	○
	—	—	—	—	—	—	○	△*9	△*9	—	—	—	—	○	△*9

*9 Model HRW : DD, KK --- grease nipple cannot be attached to model HRW17,
Dedicated cap C --- applicable to models HRW14 to 60,
Dedicated cap GC --- applicable to models HRW35, 50, 60, Dedicated bellows --- applicable to models HRW17 to 50,
Stainless steel LM Guides --- applicable to models HRW12 to 35

Note) Those models equipped with QZ Lubricator cannot have a grease nipple. When desiring a grease nipple for a model attached with QZ, contact THK.

Model No.		Type	Contamination Protection										
			End seal	Side seal	Inner seal	End seal + Side seal (+ Inner seal)	Double seals + Side seal (+ Inner seal)	End seal + Side seal (+ Inner seal) + Metal scraper	Double seals + Side seal (+ Inner seal) + Metal scraper	LaCS	Side Scraper	End seal + Protector	Double seals + Protector
		Symbol	UU	—	—	SS	DD	ZZ	KK	HH	YY	JJ	TT
Full-ball	RSR	2,3	—	—	—	—	—	—	—	—	—	—	—
		3W,14	○	—	—	—	—	—	—	—	—	—	—
	HR	918 to 2555	○	—	—	—	—	—	—	—	—	—	—
		3065 to 60125	○	—	—	—	—	—	—	—	—	—	—
	GSR	15 to 35	○*	○	—	○	○	○	○	—	—	—	—
	GSR-R	25 to 35	○	○	—	○	○	○	○	—	—	—	—
	CSR	15 to 25	○	○	—	○	○	○*14	○*14	—	—	—	—
		30 to 45	○	○	○	○	○	○	○	—	—	—	—
	MX	5,7	○	—	—	—	—	—	—	—	—	—	—
	JR	25 to 55	○	○	—	○	○	○	○	—	—	—	—
	HCR	12	○	—	—	—	—	—	—	—	—	—	—
		15 to 65	○	○	—	○	○	○*15	○*15	—	—	—	—
	HMG	15 to 65	○*19	—	—	—	—	—	—	—	—	—	—
	NSR	20TBC to 30TBC	○	○	—	○	—	—	—	—	—	—	—
		40TBC to 70TBC	○	○	○	○	—	—	—	—	—	—	—
	HSR-M1	15 to 35	○	○	—	○	—	—	—	—	—	—	—
	SR-M1	15 to 35	○	○	—	○	—	—	—	—	—	—	—
	RSR-M1	9,12W,15W	○	—	—	—	—	—	—	—	—	—	—
		9W,12,15,20	○	—	—	—	—	—	—	—	—	—	—
	HSR-M2	15 to 25	○	○	—	○	—	—	—	—	—	—	—
Caged Roller	SRG	15	○	○	○	○	○	—	—	—	—	—	—
		20,25,30	○	○	○	○	○	○	○	○	—	—	—
		35,45,55,65	○	○	○	○	○	○	○	○	○	○	○
		85,100	○	○	○	○	○*17	○	○	○	—	—	—
	SRN	35 to 65	○	○	○	○	○	○	○	○	—	—	—
	SRW	70 to 100	○	○	○	○	○	○	○	○	—	—	—
		130,150	○	○	○	○	○	○	○	—	—	—	—

*10 Model RSR : Dedicated cap C --- applicable to model RSR14W
*11 Model HR : Dedicated cap C --- applicable to models HR1123 to 50105, Dedicated cap GC --- applicable to models HR2042 to 50105
*12 Model GSR : Dedicated cap GC --- applicable to models GSR20 to 35
*13 Model GSR-R : AP-HC treatment of rack rail is not applicable
*14 Model CSR : ZZ, KK --- grease nipple cannot be attached to models CSR15.Dedicated cap model GC --- applicable to models CSR20,25.

Options

Table of Supported Options by Models

Symbols in the table ○: Applicable △: Applicable depending on model (see note)
★: Recommended by THK (standard stock item)

												Lubrication		Corrosion Prevention	
	Low- resis-tance end seal	Low resistance end seal + side seal	LiCS	LiCS + Side seal (+ Inner seal)	Plate Cover SV	Steel tape SP	Dedicated cap C	Dedicated cap GC	Dedi-cated bellows	Dedicat-ed LM Cover	Tapped-hole LM Rail Type	QZ Lubrica-tor	End plate with/without side nipple	AP-HC, AP-C, AP-CF	Stainless Steel LM Guide
	LL	RR	GG	PP	Z	Z	—	—	—	TPH (dedicated for HSR)	K	QZ	—	F	M
	—	—	—	—	—	—	—	—	—	—	—	—	—	○	○
	—	—	—	—	—	—	△★10	—	—	—	—	—	—	○	○
	—	—	—	—	—	—	△★11	△★11	—	—	—	—	—	○	○
	—	—	—	—	—	—	△★11	△★11	—	—	—	—	—	○	—
	—	—	—	—	—	—	○	△★12	—	—	—	—	—	○	—
	—	—	—	—	—	—	○	○	—	—	—	—	—	△★13	—
	○	○	—	—	—	—	○	△★14	—	—	○	—	—	○	—
	○	○	—	—	—	—	○	○	—	—	○	—	—	○	—
	—	—	—	—	—	—	—	—	—	—	○	—	—	○	○
	—	—	—	—	—	—	—	—	—	—	—	—	—	○	—
	—	—	—	—	—	—	—	—	—	—	—	—	—	○	—
	○★16	○	—	—	—	—	—	—	—	—	—	—	—	○	—
	—	—	—	—	—	—	○	△★17	—	—	—	—	—	○	—
	—	—	—	—	—	—	○	○	○	—	—	—	—	○	—
	—	—	—	—	—	—	○	○	○	—	—	—	—	○	—
	—	—	—	—	—	—	○★20	—	—	—	—	—	—	○	
	—	—	—	—	—	—	○★20	—	—	—	—	—	—	○	
	—	—	—	—	—	—	○★20	—	—	—	—	—	—	○	
	—	—	—	—	—	—	—	—	—	—	—	—	—	○	
	—	—	—	—	—	—	○	—	—	—	—	—	—	○	
	—	—	○	○	—	—	○	—	○	—	—	○	○	○	—
	—	—	○	○	△★18	—	○	○	○	—	—	○	○	○	—
	—	—	—	—	△★18	—	○	○	○	—	—	○	○	○	—
	—	—	—	—	○★18	—	○	○	○	—	—	○	○	○	—
	—	—	—	—	○★21	—	○	○	—	—	—	○	○	○	—
	—	—	—	—	○	—	○	○	○	—	—	○	○	○	—
	—	—	—	—	○	—	○	○	○	—	—	○	○	○	—

*15 Model HCR : ZZ, KK --- grease nipple cannot be attached to model HCR15.
*16 Model HCR : When using joined LM rails, the contamination prevention seal must be a low-resistance seal (contamination protection code: LL).
*17 Model HMG : Dedicated GC caps — compatible with Model HMG25
*18 Model SRG : DD — side nipple required for Model SRG100.
Plate cover Model SV — suitable for Model 25 and models 35 to 100 (see A1-413) — suitable for models 35 to 65
*19 Model HMG : Straight-curved seal (code: UU) required.
*20 Model HSR/SR/RSR-M1 (for High Temperatures) : Dedicated C caps — only work at room temperature
*21 Model SRN : Plate cover SV — suitable for models 35 to 65 (A1-425) — suitable for models 35 to 65

Note) Those models equipped with QZ Lubricator cannot have a grease nipple. When desiring a grease nipple for a model attached with QZ, contact THK.

Seal and Metal scraper

- For the supported models, see the table of options by model number on A1-458.
- For the LM block dimension (dimension L) with seal attached, see A1-470 to A1-477.
- For the maximum seal resistance, see A1-482 to A1-484.

Item name	Schematic diagram / mounting location	Purpose/location of use
End Seal	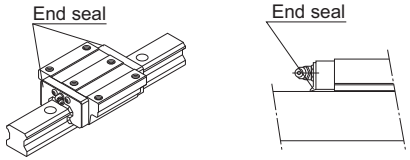	Used in locations exposed to dust
Side Seal	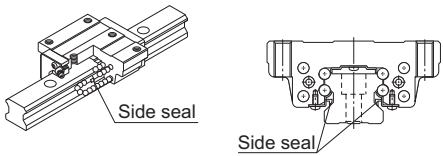	Used in locations where dust may enter the LM block from the side or bottom surface, such as vertical, horizontal and inverted mounts
Inner Seal	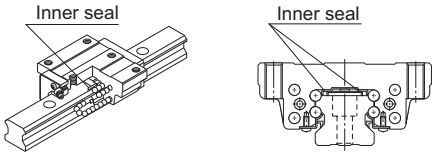	Used in locations severely exposed to dust or cutting chips
Double Seals	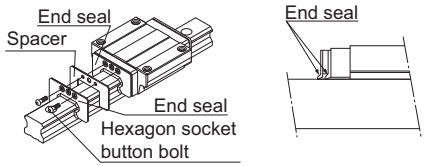	Used in locations exposed to much dust or many cutting chips
Metal Scraper (Non-contact)	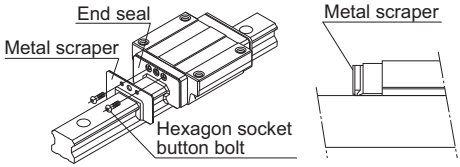	Used in locations where welding spatter may adhere to the LM rail

Options

Seal and Metal scraper

Symbol	Contamination Protection Accessories
UU	With end seal
SS	With end seal + side seal + inner seal*
DD	With double seals + side seal + inner seal*
ZZ	With end seal + side seal + inner seal* + metal scraper
KK	With double seals + side seal + inner seal* + metal scraper

* Some models are not equipped with inner seals.(See A1-458)

Laminated Contact Scraper LaCS

- For the supported models, see the table of options by model number on A1-458.
- For the LM block dimension (dimension L) with LaCS attached, see A1-470 to A1-477.
- For the resistance of LaCS, see A1-485.
- For notes regarding how to handle the LaCS, refer to A1-531.

For locations with adverse environment, Laminated Contact Scraper LaCS is available.
LaCS removes minute foreign material adhering to the LM rail in multiple stages and prevents it from entering the LM block with laminated contact structure (3-layer scraper).

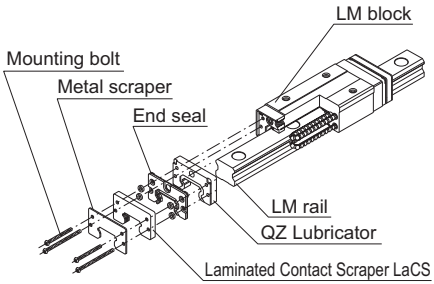

Appearance Drawing

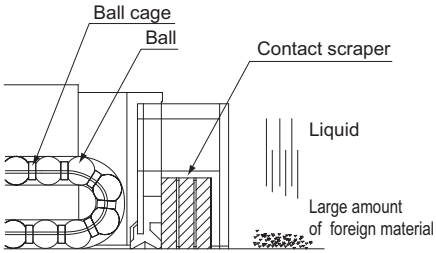

Structural Drawing

[Features]

- Since the 3 layers of scrapers fully contact the LM rail, LaCS is highly capable of removing minute foreign material.
- Since it uses oil-impregnated, foam synthetic rubber with a self-lubricating function, low friction resistance is achieved.

Symbol	Contamination Protection Accessories
SSHH	With end seal + side seal + inner seal*1 + LaCS
DDHH	With double seals + side seal + inner seal *1 + LaCS
ZZHH	With end seal + side seal + inner seal *1 + metal scraper + LaCS
KKHH	With double seals + side seal + inner seal *1 + metal scraper + LaCS
JJHH*2	With end seal + side seal + inner seal*1 + LaCS + protector (serving also as metal scraper)
TTHH*2	With double seals + side seal + inner seal*1 + LaCS + protector (serving also as metal scraper)

*1 Some models are not equipped with inner seals.(See A1-458)
*2 JJHH and TTHH are only available for models SVR/SVS, NR/NRS-X and SRG.
Note) HH type (with LaCS) for models SVR/SVS, NR/NRS-X, and SRG comes with a protector (see A1-467).
Contact THK if you want to use the Protector with other options.

● Test under an Environment with a Water-soluble Coolant

[Test conditions] Test environment: water-soluble coolant

Item		Description
Tested model	No.1	SHS45R1SS+3000L (end seal only)
	No.2	SHS45R1SSHH+3000L (end seal and LaCS)
Maximum speed		200m/min
Environmental conditions		Coolant sprayed: 5 time per day

[Test result]

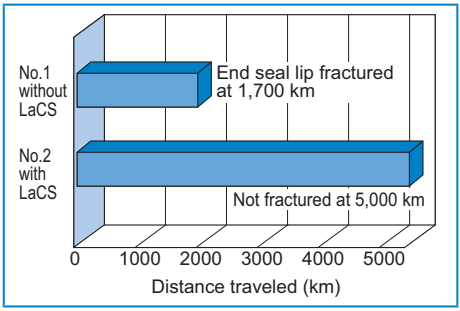

Magnified view of the end seal lip

No. 1: without LaCS - lip fractured at 1,700 km

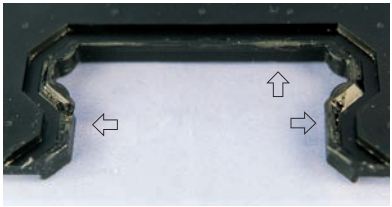

⇦Areas marked with arrow are fractured

No. 2: with LaCS - no anomaly observed after traveling 5,000 km

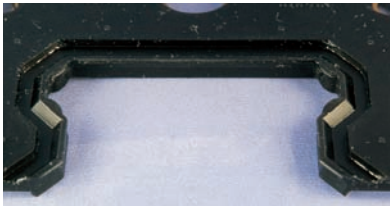

Lip has not been fractured

● Test under an Environment with Minute Foreign Matter

[Test conditions] Test environment: minute foreign material

Item		Description
Tested model	No.1	Caged Ball LM Guide #45R (DD+600L) double seals only
	No.2	Caged Ball LM Guide #45R (HH+600L) LaCS only
Max speed/ acceleration		60m/min, 1G
External load		9.6kN
Foreign material conditions		Type: FCD450#115 (particle diameter: 125 μm or less)
		Sprayed amount: 1g/1hour (total sprayed amount: 120 g)

[Test result] Amount of foreign material entering the raceway

Seal configuration		Amount of foreign material entering the raceway g
Double-seal configuration (2 end seals superposed with each other)	Tested model 1	0.3
	Tested model 2	0.3
	Tested model 3	0.3
LaCS	Tested model 1	0
	Tested model 2	0
	Tested model 3	0

No. 1 Traveled 100 km (double-seal configuration)

Large amount of foreign matter has entered the raceway

No. 2 Traveled 100 km (LaCS only)

No foreign matter entering the raceway observed

Side Scraper

- Applicable models: models SVR/SVS, NR/NRS-X and SRG
- For the resistance of side scraper, see A1-486.
- For the LM block dimension (dimension L) with side scraper attached, see A1-470.
- For notes regarding how to handle the side scraper, see A1-531.

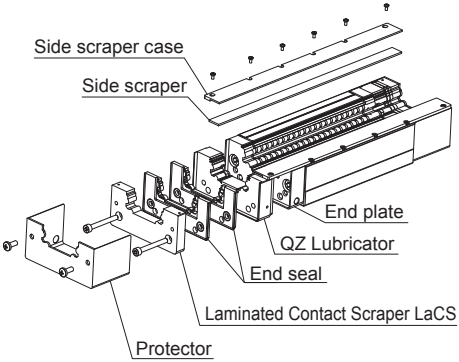

Outline view
(Ex: in case of QZTTHHYY type)

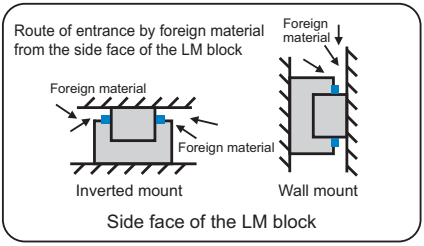

[Features]

- Minimizes foreign material entering from the side of the LM Guide in a harsh environment.
- Demonstrates a dust protection effect in inverted or wall mount.

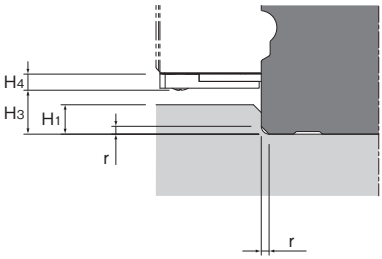

Side view of the LM block after the side scraper is mounted

Note) Note that the side scraper is not sold alone.

The shoulder height of the mounting surface and the corner radius of model SVR/SVS or NR/NRS-X after side scraper is mounted

Unit: mm

Model No.	Corner radius r(max)	Shoulder height of the LM rail H_1	H_3	Side scraper thickness H_4
25	0.5	2	2.9	2.6
30	1	3.5	4.4	
35	1	5.5	6.4	
45	1	8	9	
55	1.5	10.5	11.4	
65	1.5	11	12.3	

The shoulder height of the mounting surface and the corner radius after the side scraper of model SRG is mounted

Unit: mm

Model No.	Corner radius r(max)	Shoulder height of the LM rail H_1	H_3	Side scraper thickness H_4
35	1	3	4	2
45	1	3.5	5.5	2.5
55	1.5	5.5	7.5	2.5
65	1.5	6	8.5	3

Model number coding

SVR45 LR 1 QZ JJHH YY C1 +1200L

With side scraper*

* The side scraper can accommodate various options of dust control accessories and lubrication accessories. For details, contact THK.

Protector

●Applicable models: models SVR/SVS, NR/NRS-X and SRG
●HH type (with LaCS) for models SVR/SVS, NR/NRS-X and SRG is provided with the protector.
●For the LM block dimension (dimension L) with protector attached, see A1-470.

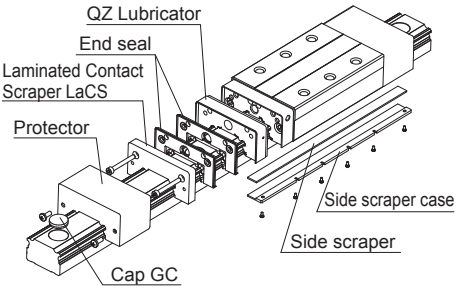

Outline view
(Ex: in case of QZTTHHYY type)

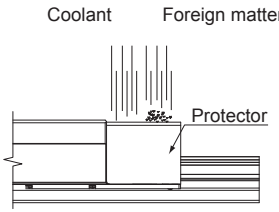

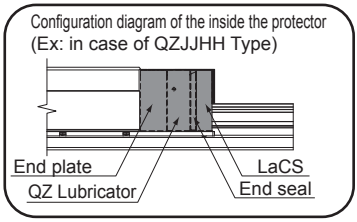

[Features]

- The protector minimizes the entrance of foreign material even in harsh environments where foreign material such as fine particles and liquids are present.

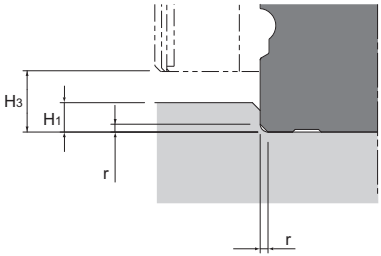

Side view of the LM block after the protector is mounted

The shoulder height of the mounting surface and the corner radius of model SVR/SVS or NR/NRS-X after protector is mounted

Unit: mm

Model No.	Corner radius r(max)	Shoulder height of the LM rail H_1	H_3
25	0.5	4	5.5
30	1	5	7
35	1	6	9
45	1	8	11.6
55	1.5	10	14
65	1.5	10	15

The shoulder height of the mounting surface and the corner radius after the protector of model SRG is mounted

Unit: mm

Model No.	Corner radius r(max)	Shoulder height of the LM rail H_1	H_3
35	1	5	6
45	1.5	6	8
55	1.5	8	10
65	1.5	9	11.5

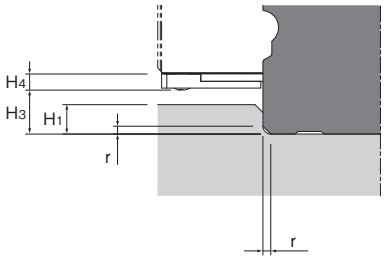

Side view of the LM block after the protector and side scraper are mounted

The shoulder height of the mounting surface and the corner radius of Model SVR/SVS or NR/NRS-X after the protector and side scraper are mounted

Unit: mm

Model No.	Corner radius r(max)	Shoulder height of the LM rail H_1	H_3	Side scraper thickness H_4
25	0.5	2	2.9	2.6
30	1	3.5	4.4	
35	1	5.5	6.4	
45	1	8	9	
55	1.5	10.5	11.4	
65	1.5	11	12.3	

The shoulder height of the mounting surface and the corner radius after the protector and side scraper of Model SRG are mounted

Unit: mm

Model No.	Corner radius r(max)	Shoulder height of the LM rail H_1	H_3	Side scraper thickness H_4
35	1	3	4	2
45	1	3.5	5.5	2.5
55	1.5	5.5	7.5	2.5
65	1.5	6	8.5	3

Note1) Those models equipped with QZ Lubricator cannot have a grease nipple. When desiring a grease nipple for a model attached with QZ, contact THK.
Note2) Contact THK if you want to use the protector with other options.

Light-Resistance Contact Seal LiCS

●For the supported models, see the table of options by model number on A1-458.
●For the LM block dimension (dimension L) with LiCS attached, see A1-480.
●For the resistance of LiCS, see A1-486.
●For notes regarding how to handle the LiCS, see A1-532.

LiCS is a light sliding resistance contact seal. It is effective in removing dust on the raceway and retaining a lubricant such as grease. It achieves extremely low drag and smooth, stable motion.

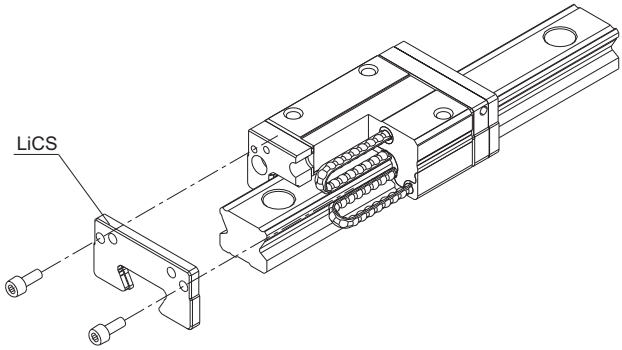

Fig.1 Structural Drawing of SSR + LiCS

[Features]

Light-Resistance Contact Seal LiCS is a seal that uses a light-resistance material in its sealing element and contacts the LM rail raceway to achieve low drag resistance. It is optimal for applications where low drag resistance is required, such as semiconductor-related devices, inspection devices and OA equipment all of which are used in favorable environments.

- Since the sealing element contacts the LM rail raceway, it is effective in removing dust on the raceway.
- Use of oil-impregnated, expanded synthetic rubber, which has excellent self-lubricating property, achieves low drag resistance.

Model number coding

SSR20 XW 2 GG C1 +600L P -Ⅱ

- SSR20: LM Guide model number
- XW: Type of LM block
- 2: No. of LM blocks used on the same rail
- GG: With LiCS seal on both ends
- C1: Radial clearance symbol
  Normal (No symbol)
  Light preload (C1)
  Medium preload (C0)
- +600L: LM rail length (in mm)
- P: Accuracy symbol
  Normal grade (No Symbol) / High accuracy grade (H)
  Precision grade (P) / Super precision grade (SP)
  Ultra precision grade (UP)
- -Ⅱ: Symbol for No. of rails used on the same plane

Symbol	Contamination Protection Accessories
GG	LiCS
PP	With LiCS + side seal + inner seal*

* Some models are not equipped with inner seals.(See A1-458)

Dimensions of Each Model with an Option Attached

The LM Block Dimension (Dimension L) with LaCS and Seals Attached

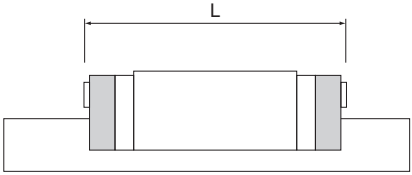

Unit: mm

Model No.		L								
		UU	SS	DD	ZZ	KK	SSHH	DDHH	ZZHH	KKHH
SHS	15C/V/R	64.4	64.4	69.8	66.8	72.2	78.6	84	79.8	85.2
	15LC/LV	79.4	79.4	84.8	81.8	87.2	93.6	99	94.8	100.2
	20C/V	79	79	85.4	83	89.4	93.6	100	96	102.4
	20LC/LV	98	98	104.4	102	108.4	112.6	119	115	121.4
	25C/V/R	92	92	101.6	100.4	107.6	112	119.2	114.4	121.6
	25LC/LV/LR	109	109	118.6	117.4	124.6	129	136.2	131.4	138.6
	30C/V/R	106	106	116	113.8	122.4	129.4	138	131.8	140.4
	30LC/LV/LR	131	131	141	138.8	147.4	154.4	163	156.8	165.4
	35C/V/R	122	122	134.8	132.4	142.2	148	157.8	150.4	160.2
	35LC/LV/LR	152	152	164.8	162.4	172.2	178	187.8	180.4	190.2
	45C/V/R	140	140	152.8	151.2	161	169	178.8	172.2	182
	45LC/LV/LR	174	174	186.8	185.2	195	203	212.8	206.2	216
	55C/V/R	171	171	186.6	184.2	195.4	202	213.2	205.2	216.4
	55LC/LV/LR	213	213	228.6	226.2	237.4	244	255.2	247.2	258.4
	65C/V	221	221	238.6	236.2	248.6	258	270.4	261.2	273.6
	65LC/LV	272	272	289.6	287.2	299.6	309	321.4	312.2	324.6
SSR	15XVY	40.3	40.3	47.3	44.9	50.7	59.5	65.3	60.7	66.5
	15XWY/XTBY	56.9	56.9	63.9	61.5	67.3	76.1	81.9	77.3	83.1
	20XV	47.7	47.7	54.6	53.4	60.3	67.7	74.6	70.1	77
	20XW/XTB	66.5	66.5	73.4	72.2	79.1	86.5	93.4	88.9	95.8
	25XVY	60	60	67.4	65.7	73.1	80	87.4	82.4	89.8
	25XWY/XTBY	83	83	90.4	88.7	96.1	103	110.4	105.4	112.8
	30XW	97	97	105.1	102.7	110.8	121	129.1	123.4	131.5
	35XW	110.9	110.9	119.9	117.7	126.7	136.9	145.9	139.3	148.3
SHW	12CAM/CRM	37	37	—	—	—	48	—	—	—
	12HRM	50.4	50.4	—	—	—	61.4	—	—	—
	14CAM/CRM	45.5	45.5	—	—	—	60.7	—	—	—
	17CAM/CRM	51	51	54	53.4	56.4	66.2	69.2	67.4	70.4
	21CA/CR	59	59	64	63.2	68.2	75.6	80.6	77.2	82.2
	27CA/CR	72.8	72.8	78.6	77.8	83.6	89.4	95.2	91.8	97.6
	35CA/CR	107	107	114.4	112	119.4	129	136.4	131.4	138.8
	50CA/CR	141	141	149.2	147.4	155.6	166	174.2	168.4	176.6

Options

Dimensions of Each Model with an Option Attached

Unit: mm

Model No.		L								
		UU	SS	DD	ZZ	KK	SSHH	DDHH	ZZHH	KKHH
SRS	5M	16.9	—	—	—	—	—	—	—	—
	5N	20.1	—	—	—	—	—	—	—	—
	5WM	22.1	—	—	—	—	—	—	—	—
	5WN	28.1	—	—	—	—	—	—	—	—
	7S	19	19	—	—	—	—	—	—	—
	7M	23.4	23.4	—	—	—	—	—	—	—
	7N	31	31	—	—	—	—	—	—	—
	7WS	22.5	22.5	—	—	—	—	—	—	—
	7WM	31	31	—	—	—	—	—	—	—
	7WN	40.9	40.9	—	—	—	—	—	—	—
	9XS	21.5	21.5	—	—	—	33.1	—	—	—
	9XM	30.8	30.8	—	—	—	42.4	—	—	—
	9XN	40.8	40.8	—	—	—	52.4	—	—	—
	9WS	26.5	26.5	—	—	—	38.1	—	—	—
	9WM	39	39	—	—	—	50.6	—	—	—
	9WN	50.7	50.7	—	—	—	62.3	—	—	—
	12S	25	25	—	—	—	36.6	—	—	—
	12M	34.4	34.4	—	—	—	46	—	—	—
	12N	47.1	47.1	—	—	—	58.7	—	—	—
	12WS	30.5	30.5	—	—	—	42.1	—	—	—
	12WM	44.5	44.5	—	—	—	56.1	—	—	—
	12WN	59.5	59.5	—	—	—	71.1	—	—	—
	15S	32	32	—	—	—	46.2	—	—	—
	15M	43	43	—	—	—	57.2	—	—	—
	15N	60.8	60.8	—	—	—	75	—	—	—
	15WS	41.5	41.5	—	—	—	55.7	—	—	—
	15WM	55.5	55.5	—	—	—	69.7	—	—	—
	15WN	74.5	74.5	—	—	—	88.7	—	—	—
	20M	50	50	—	—	—	65.2	—	—	—
	25M	77	77	—	—	—	92.6	—	—	—
SCR	15S	64.4	64.4	69.8	66.8	72.2	78.9	84.4	79.9	85.2
	20S	79	79	85.4	83	89.4	94	100	96	102.5
	20	98	98	104.4	102	108.4	113	119	115	121.5
	25	109	109	118.6	117.4	124.6	129	136.2	131.4	138.6
	30	131	131	141	138.8	147.4	154.4	163	156.8	165.4
	35	152	152	164.8	162.4	172.2	178	187.8	180.4	190.2
	45	174	174	186.8	185.2	195	203	212.8	206.2	216
	65	272	272	289.6	287.2	299.6	309	321.4	312.2	324.6

Unit: mm

Model No.		L								
		UU	SS	DD	ZZ	KK	SSHH	DDHH	ZZHH	KKHH
HSR	8RM	24	—	—	—	—	—	—	—	—
	10RM	31	—	—	—	—	—	—	—	—
	12RM	45	—	—	—	—	—	—	—	—
	15A/B/R/YR	56.6	56.6	61.8	58.2*	63.4*	76	81.2	77.2	82.4
	20A/B/R/CA/CB/YR	74	74	80.6	76.6	83.2	92	98.6	95.2	101.8
	20LA/LB/LR/HA/HB	90	90	96.6	92.6	99.2	108	114.6	111.2	117.8
	25A/B/R/CA/CB/YR	83.1	83.1	90.7	86.7	94.3	101	108.6	105.3	112.9
	25LA/LB/LR/HA/HB	102.2	102.2	109.8	105.8	113.4	120.1	127.7	124.4	132
	30A/B/R/CA/CB/YR	98	98	105.6	101.6	109.2	119.9	127.5	124.2	131.8
	30LA/LB/LR/HA/HB	120.6	120.6	128.2	124.2	131.8	142.5	150.1	146.8	154.4
	35A/B/R/CA/CB/YR	109.4	109.4	117	113	120.6	132.4	140	135.6	143.2
	35LA/LB/LR/HA/HB	134.8	134.8	142.4	138.4	146	157.8	165.4	161	168.6
	45A/B/R/CA/CB/YR	139	139	146.2	144.2	151.4	168.6	175.8	171.8	178.8
	45LA/LB/LR/HA/HB	170.8	170.8	178	176	183.2	200.4	207.6	203.6	210.6
	55A/B/R/CA/CB/YR	163	163	170.2	168.2	175.4	193.2	200.4	196.4	203.6
	55LA/LB/LR/HA/HB	201.1	201.1	208.3	206.3	213.5	231.3	238.5	234.5	241.7
	65A/B/R/CA/CB/YR	186	186	193.2	191.2	198.4	223	229	225	232.2
	65LA/LB/LR/HA/HB	245.5	245.5	252.7	250.7	257.9	282.5	288.5	284.5	291.7
	85A/B/R/CA/CB/YR	245.6	245.6	252.8	252.4	259.6	278.8	286	283.4	290.6
	85LA/LB/LR/HA/HB	303	303	310.2	309.8	317	336.2	343.4	340.8	348
	100HA/HB/HR	334	334	—	—	—	—	—	—	—
	120HA/HB/HR	365	365	—	—	—	—	—	—	—
	150HA/HB/HR	396	396	—	—	—	—	—	—	—
SR	15W/TB	57	57	62.2	58.4*	63.6*	—	—	—	—
	15V/SB	40.4	40.4	45.6	41.8*	47*	—	—	—	—
	20W/TB	66.2	66.2	72.8	70.6*	77.2*	—	—	—	—
	20V/SB	47.3	47.3	53.9	51.7*	58.3*	—	—	—	—
	25WY/TBY	83	83	90.6	87.4	95	—	—	—	—
	25VY/SBY	59.2	59.2	66.8	63.6	71.2	—	—	—	—
	30W/TB	96.8	96.8	104.4	99.4	107	—	—	—	—
	30V/SB	67.9	67.9	75.5	70.5	78.1	—	—	—	—
	35W/TB	111	111	118.6	113.6	121.2	—	—	—	—
	35V/SB	77.6	77.6	85.2	80.2	87.8	—	—	—	—
	45W/TB	126	126	134.6	129.4	138	—	—	—	—
	55W/TB	156	156	164.6	159.4	168	—	—	—	—
	70T	194.6	194.6	201.8	200.8	208	—	—	—	—
	85T	180	180	—	—	—	—	—	—	—
	100T	200	200	—	—	—	—	—	—	—
	120T	235	235	—	—	—	—	—	—	—
	150T	280	280	—	—	—	—	—	—	—

*Grease nipple cannot be installled.

Options

Dimensions of Each Model with an Option Attached

Unit: mm

Model No.		L								
		UU	SS	DD	ZZ	KK	SSHH	DDHH	ZZHH	KKHH
NR/ NRS	75R/A/B	218	218	229	226.6	237.6	—	—	—	—
	75LR/LA/LB	274	274	285	282.6	293.6	—	—	—	—
	85R/A/B	246.7	246.7	257.7	256.1	267.1	—	—	—	—
	85LR/LA/LB	302.8	302.8	313.8	312.2	323.2	—	—	—	—
	100R/A/B	286.2	286.2	297.8	295.6	307.2	—	—	—	—
	100LR/LA/LB	326.2	326.2	337.8	335.6	347.2	—	—	—	—
HRW	12LRM	37	37	—	—	—	—	—	—	—
	14LRM	45.5	45.5	—	—	—	—	—	—	—
	17CA/CR	50.8	—	54	53.6	58.6	—	—	—	—
	21CA/CR	58.8	—	64.2	62.8	69	—	—	—	—
	27CA/CR	72.8	72.8	79	75.6	81.8	—	—	—	—
	35CA/CR	106.6	106.6	113.8	112	119.2	—	—	—	—
	50CA/CR	140.5	140.5	147.7	143.3	150.5	—	—	—	—
	60CA	158.9	158.9	169.7	165.1	175.9	—	—	—	—
RSR/ RSR-W	2M	—	—	—	—	—	—	—	—	—
	2N	—	—	—	—	—	—	—	—	—
	3M	—	—	—	—	—	—	—	—	—
	3N	—	—	—	—	—	—	—	—	—
	3WM	14.9	—	—	—	—	—	—	—	—
	3WN	19.9	—	—	—	—	—	—	—	—
	14WVM	50	—	—	—	—	—	—	—	—

Unit: mm

Model No.		L								
		UU	SS	DD	ZZ	KK	SSHH	DDHH	ZZHH	KKHH
HR	918	45	—	—	—	—	—	—	—	—
	1123	52	—	—	—	—	—	—	—	—
	1530	69	—	—	—	—	—	—	—	—
	2042	91.6	—	—	—	—	—	—	—	—
	2042T	110.7	—	—	—	—	—	—	—	—
	2555	121	—	—	—	—	—	—	—	—
	2555T	146.4	—	—	—	—	—	—	—	—
	3065	145	—	—	—	—	—	—	—	—
	3065T	173.5	—	—	—	—	—	—	—	—
	3575	154.8	—	—	—	—	—	—	—	—
	3575T	182.5	—	—	—	—	—	—	—	—
	4085	177.8	—	—	—	—	—	—	—	—
	4085T	215.9	—	—	—	—	—	—	—	—
	50105	227	—	—	—	—	—	—	—	—
	50105T	274.5	—	—	—	—	—	—	—	—
	60125	329	—	—	—	—	—	—	—	—
GSR	15T	59.8	59.8	65*	65.8*	71*	—	—	—	—
	15V	47.1	47.1	52.3*	53.1*	58.3*	—	—	—	—
	20T	74	74	80.6	77.6	84.2	—	—	—	—
	20V	58.1	58.1	64.7	61.7	68.3	—	—	—	—
	25T	88	88	95	91.6	98.6	—	—	—	—
	25V	69	69	76	72.6	79.6	—	—	—	—
	30T	103	103	110.6	107.2	114.8	—	—	—	—
	35T	117	117	124.6	121.2	128.8	—	—	—	—
GSR-R	25T-R	88	88	95	91.6	98.6	—	—	—	—
	25V-R	69	69	76	72.6	79.6	—	—	—	—
	30T-R	103	103	110.6	107.2	114.8	—	—	—	—
	35T-R	117	117	124.6	121.2	128.8	—	—	—	—
CSR	15	56.6	56.6	61.8	58.2*	63.4*	—	—	—	—
	20S	74	74	80.6	76.6	83.2	—	—	—	—
	20	90	90	96.6	92.6	99.2	—	—	—	—
	25S	83.1	83.1	90.7	86.7	94.3	—	—	—	—
	25	102.2	102.2	109.8	105.8	113.4	—	—	—	—
	30S	98	98	105.6	101.6	109.2	—	—	—	—
	30	120.6	120.6	128.2	124.2	131.8	—	—	—	—
	35	134.8	134.8	142.4	138.4	146	—	—	—	—
	45	170.8	170.8	178	176	183.2	—	—	—	—
MX	5M	23.3	—	—	—	—	—	—	—	—
	7WM	40.8	—	—	—	—	—	—	—	—
JR	25A/B/R	83.1	83.1	90.7	89.4	97	—	—	—	—
	35A/B/R	113.6	113.6	125.6	122	134	—	—	—	—
	45A/B/R	145	145	159	150.8	164.8	—	—	—	—
	55A/B/R	165	165	175.4	170.4	180.8	—	—	—	—

*Grease nipple cannot be installled.

Options

Dimensions of Each Model with an Option Attached

Unit: mm

Model No.		L								
		UU	SS	DD	ZZ	KK	SSHH	DDHH	ZZHH	KKHH
HCR	12A+60/100R	44.6	—	—	—	—	—	—	—	—
	15A+60/150R	54.5	54.5	59.7	—	—	—	—	—	—
	15A+60/300R	55.5	55.5	60.7	57.1*	62.3*	—	—	—	—
	15A+60/400R	55.8	55.8	61	57.3*	62.5*	—	—	—	—
	25A+60/500R	81.6	81.6	89.2	85.5	93.1	—	—	—	—
	25A+60/750R	82.3	82.3	89.9	86	93.6	—	—	—	—
	25A+60/1000R	82.5	82.5	90.1	86.2	93.8	—	—	—	—
	35A+60/600R	107.2	107.2	114.8	111.2	118.8	—	—	—	—
	35A+60/800R	107.5	107.5	115.1	111.5	119.1	—	—	—	—
	35A+60/1000R	108.2	108.2	115.8	112	119.6	—	—	—	—
	35A+60/1300R	108.5	108.5	116.1	112.3	119.8	—	—	—	—
	45A+60/800R	136.7	136.7	143.9	142.1	149.2	—	—	—	—
	45A+60/1000R	137.3	137.3	144.5	142.7	149.9	—	—	—	—
	45A+60/1200R	137.3	137.3	144.5	142.7	149.9	—	—	—	—
	45A+60/1600R	138	138	145.2	143.3	150.5	—	—	—	—
	65A+60/1000R	193.8	193.8	201	199.4	206.6	—	—	—	—
	65A+60/1500R	195.4	195.4	202.6	200.8	208	—	—	—	—
	65A+45/2000R	195.9	195.9	203.1	201.3	208.5	—	—	—	—
	65A+45/2500R	196.5	196.5	203.7	201.8	209	—	—	—	—
	65A+30/3000R	196.5	196.5	203.7	201.8	209	—	—	—	—
HMG	15A	48	—	—	—	—	—	—	—	—
	25A	62.2	—	—	—	—	—	—	—	—
	35A	80.6	—	—	—	—	—	—	—	—
	45A	107.6	—	—	—	—	—	—	—	—
	65A	144.4	—	—	—	—	—	—	—	—
NSR-TBC	20TBC	67	—	—	—	—	—	—	—	—
	25TBC	78	—	—	—	—	—	—	—	—
	30TBC	90	—	—	—	—	—	—	—	—
	40TBC	110	110	—	—	—	—	—	—	—
	50TBC	123	123	—	—	—	—	—	—	—
	70TBC	150	150	—	—	—	—	—	—	—
HSR-M1	15M1A/M1B/M1R/M1YR	59.6	59.6	—	—	—	—	—	—	—
	20M1A/M1B/M1R/M1YR	76	76	—	—	—	—	—	—	—
	20M1LA/M1LB/M1LR	92	92	—	—	—	—	—	—	—
	25M1A/M1B/M1R/M1YR	83.9	83.9	—	—	—	—	—	—	—
	25M1LA/M1LB/M1LR	103	103	—	—	—	—	—	—	—
	30M1A/M1B/M1R/M1YR	98.8	98.8	—	—	—	—	—	—	—
	30M1LA/M1LB/M1LR	121.4	121.4	—	—	—	—	—	—	—
	35M1A/M1B/M1R/M1YR	112	112	—	—	—	—	—	—	—
	35M1LA/M1LB/M1LR	137.4	137.4	—	—	—	—	—	—	—
SR-M1	15M1W/M1TB	57	57	—	—	—	—	—	—	—
	15M1V/M1SB	40.4	40.4	—	—	—	—	—	—	—
	20M1W/M1TB	66.2	66.2	—	—	—	—	—	—	—
	20M1V/M1SB	47.3	47.3	—	—	—	—	—	—	—
	25M1W/M1TB	83	83	—	—	—	—	—	—	—
	25M1V/M1SB	59.2	59.2	—	—	—	—	—	—	—

∗Grease nipple cannot be installled.

Unit: mm

Model No.		L								
		UU	SS	DD	ZZ	KK	SSHH	DDHH	ZZHH	KKHH
SR-M1	30M1W/M1TB	96.8	96.8	—	—	—	—	—	—	—
	30M1V/M1SB	67.9	67.9	—	—	—	—	—	—	—
	35M1W/M1TB	111	111	—	—	—	—	—	—	—
	35M1V/M1SB	77.6	77.6	—	—	—	—	—	—	—
RSR-M1	9M1K	30.8	—	—	—	—	—	—	—	—
	9M1N	41	—	—	—	—	—	—	—	—
	9M1WV	39	—	—	—	—	—	—	—	—
	9M1WN	50.7	—	—	—	—	—	—	—	—
	12M1V	35	—	—	—	—	—	—	—	—
	12M1N	47.7	—	—	—	—	—	—	—	—
	12M1WV	44.5	—	—	—	—	—	—	—	—
	12M1WN	59.5	—	—	—	—	—	—	—	—
	15M1V	43	—	—	—	—	—	—	—	—
	15M1N	61	—	—	—	—	—	—	—	—
	15M1WV	55.5	—	—	—	—	—	—	—	—
	15M1WN	74.5	—	—	—	—	—	—	—	—
	20M1V	66.5	—	—	—	—	—	—	—	—
	20M1N	86.3	—	—	—	—	—	—	—	—
HSR-M2	15M2A	56.6	56.6	—	—	—	—	—	—	—
	20M2A	74	74	—	—	—	—	—	—	—
	25M2A	83.1	83.1	—	—	—	—	—	—	—
SRN	35C/R	125	125	132.8	131.4	139.2	148.6	156.4	151	158.8
	35LC/LR	155	155	162.8	161.4	169.2	178.6	186.4	181	188.8
	45C/R	155	155	164.2	162.2	171.4	182	191.2	185.2	194.4
	45LC/LR	190	190	199.2	197.2	206.4	217	226.2	220.2	229.4
	55C/R	185	185	194.2	192.2	201.4	212	221.2	215.2	224.4
	55LC/LR	235	235	244.2	242.2	251.4	262	271.2	265.2	274.4
	65LC/LR	303	303	314.2	311.4	322.6	335.4	346.6	338.6	349.8
SRW	70LR	190	190	199.2	197.2	206.4	217	226.2	220.2	229.4
	85LR	235	235	244.2	242.2	251.4	262	271.2	265.2	274.4
	100LR	303	303	314.2	311.4	322.6	335.4	346.6	338.6	349.8
	130LR	350	350	361.2	361	372.2	—	—	—	—
	150LR	395	395	406.2	411	422.2	—	—	—	—

Options

Dimensions of Each Model with an Option Attached

Unit: mm

Model No.		L										
		UU	SS	DD	ZZ	KK	SSHH	DDHH	ZZHH	KKHH	JJHH	TTHH
SVR/ SVS NR-X/ NRS-X	25R/C	82.8	82.8	88	89.2	94.4	96.8*	102.0*	—	—	102.5*	107.7*
	25LR/LC	102	102	107.2	108.4	113.6	116.0*	121.2*	—	—	121.7*	126.9*
	30R/C	98	98	104.6	104.4	111	115.2*	121.8*	—	—	120.9*	127.5*
	30LR/LC	120.5	120.5	127.1	126.9	133.5	137.7*	144.3*	—	—	143.4*	150.0*
	35R/C/RH/CH	109.5	109.5	116.5	117.1	124.1	126.7*	133.7*	—	—	133.5*	140.5*
	35LR/LC/LRH/LCH	135	135	142	142.6	149.6	152.2*	159.2*	—	—	159.0*	166.0*
	45R/C/RH/CH	138.2	138.2	145.2	146.6	153.6	158.2*	165.2*	—	—	165.8*	172.8*
	45LR/LC/LRH/LCH	171	171	178	179.4	186.4	191.0*	198.0*	—	—	198.6*	205.6*
	55R/C/RH/CH	163.3	163.3	168.4	169.8	176.8	182.4*	189.4*	—	—	191.1*	198.1*
	55LR/LC/LRH/LCH	200.5	200.5	205.6	207	214	219.6*	226.6*	—	—	228.3*	235.3*
	65R/C	186	186	191.8	194.2	201.6	208.8*	216.2*	—	—	217.5*	224.9*
	65LR/LC	246	246	251.8	254.2	261.6	268.8*	276.2*	—	—	277.5*	284.9*
SRG	15A/V	69.2	69.2	71.2	—	—	—	—	—	—	—	—
	20A/V	86.2	86.2	88.2	89.6	91.6	105.2*	107.2*	107.6*	109.6*	—	—
	20LA/LV	106.2	106.2	108.2	109.6	111.6	125.2*	127.2*	127.6*	129.6*	—	—
	25C/R	95.5	95.5	100.5	100.5	105.5	115.3*	120.3*	117.7*	122.7*	—	—
	25LC/LR	115.1	115.1	120.1	120.1	125.1	134.9*	139.9*	137.3*	142.3*	—	—
	30C/R	111	111	118	116	123	130.8*	137.8*	133.2*	140.2*	—	—
	30LC/LR	135	135	142	140	147	154.8*	161.8*	157.2*	164.2*	—	—
	35C/R	125	125	132.8	130.7	138.5	142.6*	150.4*	151*	158.8*	150.8*	158.6*
	35LC/LR	155	155	162.8	160.7	168.5	172.6*	180.4*	181*	188.8*	180.8*	188.6*
	35SLC/SLR	180.8	180.8	188.6	186.5	194.3	198.4*	206.2*	206.8*	214.6*	206.6*	214.4*
	45C/R	155	155	164.2	161.5	170.7	175.6*	184.8*	184.8*	194*	184.6*	193.8*
	45LC/LR	190	190	199.2	196.5	205.7	210.6*	219.8*	219.8*	229*	219.6*	228.8*
	45SLC/SLR	231.5	231.5	240.7	238	247.2	252.1*	261.3*	261.3*	270.5*	261.1*	270.3*
	55C/R	185	185	194.2	191.5	200.7	205.6*	214.8*	214.8*	224*	214.6*	223.8*
	55LC/LR	235	235	244.2	241.5	250.7	255.6*	264.8*	264.8*	274*	264.6*	273.8*
	55SLC/SLR	292	292	301.2	298.5	307.7	312.6*	321.8*	321.8*	331*	321.6*	330.8*
	65C/V	244.9	244.9	256.1	252.5	263.7	268.9*	280.1*	280.1*	291.3*	279.9*	291.1*
	65LC/LV	303	303	314.2	310.6	321.8	327*	338.2*	338.2*	349.4*	338*	349.2*
	65SLC/SLV	380	380	391.2	387.6	398.8	404*	415.2*	415.2*	426.4*	415*	426.2*
	85LC	350	350	361.2	361	372.2	—	—	—	—	—	—
	100LC	395	395	406.2	411	422.2	—	—	—	—	—	—

∗The overall LM block length (L) of YY type (with side scraper) is also the same.
Note1) The standard overall length may include the dimension of the end seal depending on the model. If you are considering using a type without an end seal, contact THK for details.
Note2) It is recommended to use a protector with models SVR/SVS, NR/NRS-X, and SRG. Please contact THK regarding the dimensions for ZZHH and KKHH. See A1-494 for details regarding the codes for the various options.

Model number coding

SHS25 LC 2 QZ KKHH C0 +1200L P Z T -Ⅱ

- SHS25: Model number
- LC: Type of LM block
- 2: No. of LM blocks used on the same rail
- QZ: With QZ Lubricator (*1)
- KKHH: Contamination protection accessory symbol (*2)
- C0: Radial clearance symbol (*3)
  - Normal (No symbol)
  - Light preload (C1)
  - Medium preload (C0)
- +1200L: LM rail length (in mm)
- P: Accuracy symbol (*4)
  - Normal grade (No Symbol)
  - High accuracy grade (H)
  - Precision grade (P)/Super precision grade (SP)
  - Ultra precision grade (UP)
- Z: With steel tape
- T: Symbol for LM rail jointed use
- -Ⅱ: Symbol for No. of rails used on the same plane (*5)

(*1) See A1-487. (*2) See A1-494. (*3) See A1-70. (*4) See A1-75. (*5) See A1-13.

Note) This model number indicates that a single-rail unit constitutes one set. (i.e., required number of sets when 2 rails are used in parallel is 2 at a minimum.)
Those models equipped with QZ Lubricator cannot have a grease nipple.

Incremental Dimension with Grease Nipple (When LaCS is Attached)

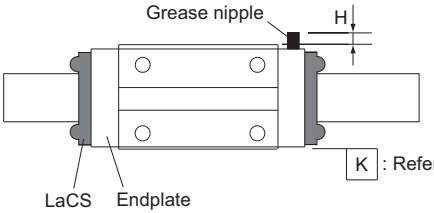

Grease nipple mounting location
for models SHS, SSR, SVR/SVS, SRG and NR/NRS-X

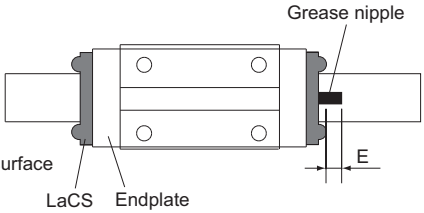

Grease nipple mounting location
for models SHW, SRS and HSR

Unit: mm

Model No.		Incremental dimension with grease nipple H	Nipple type
SHS	15C/LC	—	PB107
	15R/V/LV	4.7	PB107
	20C/LC	—	PB107
	20V/LV	4.5	PB107
	25C/LC	—	PB107
	25R/LR/V/LV	4.7	PB107
	30C/LC	—	A-M6F
	30R/LR/V/LV	7.4	A-M6F
	35C/LC	—	A-M6F
	35R/LR/V/LV	7.4	A-M6F
	45C/LC	—	A-M6F
	45R/LR/V/LV	7.7	A-M6F
	55C/LC	—	A-M6F
	55R/LR/V/LV	7.4	A-M6F
	65C/LC	—	A-M6F
	65V/LV	6.9	A-M6F
SSR	15XVY/XWY	4.4	PB107
	15XTBY	—	PB107
	20XV/XW	4.6	PB107
	20XTB	—	PB107
	25XVY/XWY	4.5	PB107
	25XTBY	—	PB107
	30XW	5	PB1021B
	35XW	5	PB1021B
SVR/SVS NR-X/ NRS-X*	25R/LR	5.5	PB1021B
	30R/LR	5.5	PB1021B
	35R/LR/RH/LRH	9	A-M6F
	45R/LR/RH/LRH	9	A-M6F
	55R/LR/RH/LRH	9	A-M6F
	65R/LR	12	A-PT1/8

Options

Dimensions of Each Model with an Option Attached

Unit: mm

Model No.		Incremental dimension with grease nipple H	Nipple type
SRG	35LC	—	A-M6F
	35LR	7.2	A-M6F
	45LC	—	A-M6F
	45LR	7.2	A-M6F
	55LC	—	A-M6F
	55LR	7.2	A-M6F
	65LC	—	A-M6F
	65LR	6.2	A-M6F

∗ The incremental dimension of the grease nipple when the side scraper and the protector are attached (SVR/SVS and SRG only) is also the same.

Unit: mm

Model No.		Incremental dimension with grease nipple E	Nipple type
SHW	21CA/CR	4.2	PB1021B
	27CA/CR	10.7	B-M6F
	35CA/CR	10	B-M6F
	50CA/CR	21	B-PT1/8
SRS	25	4	PB1021B
HSR	15A/B/R/YR	2.9	PB1021B
	20A/B/R/CA/CB/YR	9.4	B-M6F
	20LA/LB/LR/HA/HB	9.4	B-M6F
	25A/B/R/CA/CB/YR	9	B-M6F
	25LA/LB/LR/HA/HB	9	B-M6F
	30A/B/R/CA/CB/YR	9	B-M6F
	30LA/LB/LR/HA/HB	9	B-M6F
	35A/B/R/CA/CB/YR	8	B-M6F
	35LA/LB/LR/HA/HB	8	B-M6F

Note1) When desiring the mounting location for the grease nipple other than the above, contact THK.
Note2) Those models equipped with QZ Lubricator cannot have a grease nipple. When desiring both QZ Lubricator and a grease nipple, contact THK.
Note3) When desiring a grease nipple for model SHW or SRS without QZ Lubricator, indicate “with grease nipple” when placing an order. (If not, a grease nipple will not be attached.)
Note4) Model HSR15 attached with ZZ or KK cannot have a grease nipple. Contact THK for details.

LM Block Dimension (Dimension L) with LiCS Attached

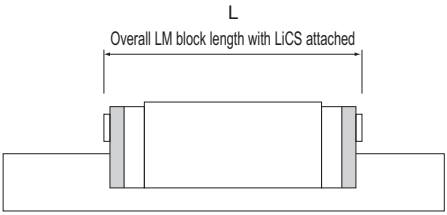

Unit: mm

Model No.		L	
		GG	PP
SSR	15XVY	48.7	48.7
	15XWY/XTBY	65.3	65.3
	20XV	55.8	55.8
	20XW/XTB	74.6	74.6
	25XVY	67.6	67.6
	25XWY/XTBY	90.6	90.6
	30XW	106.7	106.7
	35XW	121.7	121.7
SRG	15A	77	77
	15V	77	77

Model number coding

SSR20 XW 2 GG C1 +600L P T -Ⅱ

- SSR20: Model number
- XW: Type of LM block
- 2: No. of LM blocks used on the same rail
- GG: With LiCS (*1)
- C1: Radial clearance symbol (*2)
  - Normal (No symbol)
  - Light preload (C1)
  - Medium preload (C0)
- +600L: LM rail length (in mm)
- P: Accuracy symbol (*3)
  - Normal grade (No Symbol)/High accuracy grade (H)
  - Precision grade (P) /Super precision grade (SP)
  - Ultra precision grade (UP)
- T: Symbol for LM rail jointed use
- -Ⅱ: Symbol for No. of rails used on the same plane (*4)

(*1) See A1-469 (*2) See A1-70 (*3) See A1-75 (*4) See A1-13

Note) This model number indicates that a single-rail unit constitutes one set. (i.e., required number of sets when 2 rails are used in parallel is 2 at a minimum.)
Those models equipped with QZ Lubricator cannot have a grease nipple.

Incremental Dimension with Grease Nipple (When LiCS is Attached)

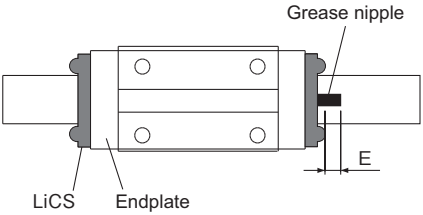

Model SSR
Location for mounting the grease nipple

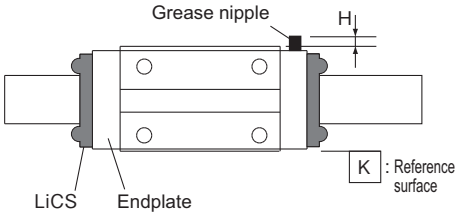

Model SRG
Location for mounting the grease nipple

Unit: mm

Model No.		Incremental dimension with grease nipple		Nipple type
		E	H	
SSR	15XVY	2.9	—	PB1021B
	15XWY/XTBY	2.9	—	PB1021B
	20XV	9	—	B-M6F
	20XW/XTB	9	—	B-M6F
	25XVY	9	—	B-M6F
	25XWY/XTBY	9	—	B-M6F
	30XW	9	—	B-M6F
	35XW	8	—	B-M6F
SRG	15A	—	—*	PB107
	15V	—	4.5	PB107

* Because this model features a flange, it projects beyond the block end surface.

Model number coding

SSR20 XW 2 GG C1 +600L H -Ⅱ

- SSR20: Model number
- XW: Type of LM block
- 2: No. of LM blocks used on the same rail
- GG: With LiCS (*1)
- C1: Radial clearance symbol (*2)
  - Normal (No symbol)
  - Light preload (C1)
  - Medium preload (C0)
- +600L: LM rail length (in mm)
- H: Accuracy symbol (*3)
  - Normal grade (No Symbol)
  - High accuracy grade (H)/Precision grade (P)
  - Super precision grade (SP)/Ultra precision grade (UP)
- -Ⅱ: Symbol for No. of rails used on the same plane (*4)

(*1) See A1-469 (*2) See A1-70 (*3) See A1-75 (*4) See A1-13

Note) This model number indicates that a single-rail unit constitutes one set. (i.e., required number of sets when 2 rails are used in parallel is 2 at a minimum.)
Those models equipped with QZ Lubricator cannot have a grease nipple.

Maximum Seal Resistance

This shows the maximum resistance value of the seals per LM block with a lubricant applied.

Unit: N

Model No.		Seal symbol	Maximum Seal Resistance
SHS	15	SS	4.5
	20		7.0
	25		10.5
	30		17.0
	35		20.5
	45		30.0
	55		31.5
	65		43.0
SSR	15X	UU	2.0
	20X		2.6
	25X		3.5
	30X		4.9
	35X		6.3
SVR/SVS	25	SS	10
	30		14
	35		18
	45		22
	55		26
	65		31
SHW	12CA/CR	UU	1.0
	12HR		1.0
	14		1.2
	17		1.4
	21		4.9
	27		4.9
	35		9.8
	50		14.7
	12CA/CR	SS	1.4
	12HR		1.8
	14		1.8
	17		2.2
	21		6.9
	27		8.9
	35		15.8
	50		22.7

Unit: N

Model No.		Seal symbol	Maximum Seal Resistance
SRS	5M/5N	UU	0.06
	5WM/5WN		0.08
	7S	SS	0.14
	7M		0.16
	7N		0.19
	7WS		0.48
	7WM		0.52
	7WN		0.55
	9XS		0.15
	9XM		0.2
	9XN		0.25
	9WS		0.89
	9WM		0.95
	9WN		1
	12S		0.49
	12M		0.55
	12N		0.6
	12WS		1.21
	12WM		1.3
	12WN		1.35
	15S		0.92
	15M		1
	15N		1.1
	15WS		1.45
	15WM		1.55
	15WN		1.6
	20M		1.25
	25M		1.6
SCR	15	UU	2.5
	20		3
	25		5
	30		10
	35		12
	45		20
	65		30

Options

Dimensions of Each Model with an Option Attached

Unit: N

Model No.		Seal symbol	Maximum Seal Resistance
HSR	8	UU	0.5
	10		0.8
	12		1.2
	15		2.0
	20		2.5
	25		3.9
	30		7.8
	35		11.8
	45		19.6
	55		19.6
	65		34.3
	85		34.3
SR	15	UU	2.5
	20		3.4
	25		4.4
	30		8.8
	35		11.8
	45		12.7
	55		15.7
	70		19.6
NR/NRS-X	25	SS	10
	30		14
	35		18
	45		22
	55		26
	65		31
NR/NRS	75	UU	42
	85		42
	100		51
HRW	12	UU	0.2
	14		0.3
	17		2.9
	21		4.9
	27		4.9
	35		9.8
	50		14.7
	60		19.6

Unit: N

Model No.		Seal symbol	Maximum Seal Resistance
RSR	14W	UU	1.2
HR	918	UU	0.5
	1123		0.7
	1530		1.0
	2042		2.0
	2555		2.9
	3065		3.4
	3575		3.9
	4085		4.4
	50105		5.9
	60125		9.8
GSR	15	UU	2.5
	20		3.1
	25		4.4
	30		6.3
	35		7.6
	25-R		4.4
	30-R		6.3
	35-R		7.6
CSR	15	UU	2.0
	20		2.5
	25		3.9
	30		7.8
	35		11.8
	45		19.6
MX	5	UU	0.06
	7W		0.4
JR	25	UU	3.9
	35		11.8
	45		19.6
	55		19.6
HCR	12	UU	1.2
	15		2.0
	25		3.9
	35		11.8
	45		19.6
	65		34.3

Unit: N

Model No.		Seal symbol	Maximum Seal Resistance
HMG	15	UU	3
	25		6
	35		8
	45		12
	65		40
NSR	20TBC	UU	4.9
	25TBC		4.9
	30TBC		6.9
	40TBC		9.8
	50TBC		14.7
	70TBC		24.5
HSR	15M1	UU	2.0
	20M1		2.5
	25M1		3.9
	30M1		7.8
	35M1		11.8
SR	15M1	UU	2.5
	20M1		3.4
	25M1		4.4
	30M1		8.8
	35M1		11.8
RSR	9M1	UU	0.1
	12M1		0.4
	15M1		0.8
	20M1		1.0
	9M1W		0.8
	12M1W		1.1
	15M1W		1.3
HSR	15M2	UU	2.0
	20M2		2.5
	25M2		3.9
SRG	15	SS	13
	20		18
	25		19
	30		22
	35		30
	45		30
	55		34
	65		40
	85		47
	100		53

Unit: N

Model No.		Seal symbol	Maximum Seal Resistance
SRN	35	SS	30
	45		30
	55		35
	65		40
SRW	70	SS	32
	85		37
	100		43
	130		50
	150		57

Maximum resistance for LaCS

Unit: N

Model No.		Maximum resistance for LaCS
SHS	15	5.2
	20	6.5
	25	11.7
	30	18.2
	35	20.8
	45	26.0
	55	32.5
	65	39.0
SSR	15	5.9
	20	6.9
	25	8.1
	30	12.8
	35	15.1
SVR/SVS NR/NRS-X	25	8.1
	30	13.4
	35	15.5
	45	23.3
	55	28.6
	65	39.6
NR/NRS	85	52.7
SHW	12	2.6
	14	3.9
	17	3.9
	21	3.9
	27	6.5
	35	13.0
	50	19.5
SRS	9	2.3
	9W	3.3
	12	3.5
	12W	4.2

Unit: N

Model No.		Maximum resistance for LaCS
SRS	15	5.1
	15W	7.5
	20	5.2
	25	7.8
SCR	15	5.2
	20	6.5
	25	11.7
	30	18.2
	35	20.8
	45	26.0
	65	39.0
HSR	15	3.8
	20	5.6
	25	7.5
	30	14.9
	35	22.4
SRG	20	6.1
	25	6.9
	30	8.2
	35	9.1
	45	14.3
	55	18.2
	65	26.0
SRN	35	9.1
	45	14.3
	55	18.2
	65	22.1
SRW	70	32.8
	85	39.7
	100	58.3

Note1) Each resistance value in the table only consists of that of LaCS, and does not include sliding resistances of seals and other accessories.
Note2) For the maximum service speed of LaCS, contact THK.
Note3) HH type (with LaCS) for models SVR/SVS and SRG is provided with the protector (see A1-467).
Contact THK if you want to use the Protector with other options.

Maximum resistance for LiCS

Unit: N

Model No.		Maximum resistance for LiCS
SSR	15X	1
	20X	1.1
	25X	1.6
	30X	1.6
	35X	2
SRG	15	0.7

Note) The value indicates the sliding resistance of two LiCS units per LM block and does not include the sliding resistances of the LM block and the side seals.

Maximum resistance for the side scraper

Unit: N

Model No.		Maximum Resistance for the side scraper (KKHHYY/TTHHYY Option)
SVR/ SVS NR/ NRS-X	25	4.4
	25L	5.2
	30	4.7
	30L	5.5
	35	4.6
	35L	5.5
	45	5.1
	45L	6.1
	55	5.3
	55L	6.3
	65	5.4
	65L	6.9

Unit: N

Model No.		Maximum Resistance for the side scraper (DDHHYY Option)
SRG	35	2.9
	35L	3.4
	35SL	3.9
	45	4.7
	45L	5.6
	45SL	6.8
	55	5.5
	55L	6.8
	55SL	8.3
	65	7.2
	65L	8.7
	65SL	10.9

QZ Lubricator

●For the supported models, see the table of options by model number on A1-458.
●For the LM block dimension with QZ attached, see A1-490 to A1-493.
●For notes regarding how to handle the QZ, see A1-531.

QZ Lubricator feeds the right amount of lubricant to the raceway on the LM rail. This allows an oil film to continuously be formed between the rolling element and the raceway, and drastically extends the lubrication and maintenance intervals.
The structure of QZ Lubricator consists of three major components: (1) a heavy oil-impregnated fiber net (function to store lubricant), (2) a high-density fiber net (function to apply lubricant to the raceway) and (3) an oil-control plate (function to adjust oil flow). The lubricant contained in QZ Lubricator is fed by the capillary phenomenon, which is used also in felt pens and many other products, as the fundamental principle.

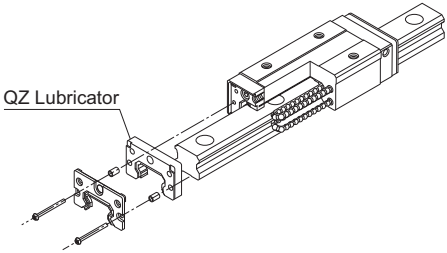

Appearance Drawing

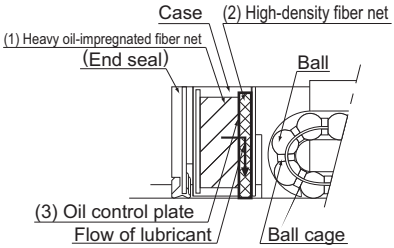

Structural Drawing

[Features]

- Since it supplements an oil loss, the lubrication maintenance interval can be significantly extended.
- Eco-friendly lubrication system that does not contaminate the surrounding area since it feeds the right amount of lubricant to the ball raceway.

Symbol	Contamination Protection Accessories
QZUU	With end seal + QZ
QZSS	With end seal + side seal + inner seal*1 + QZ
QZDD	With double seals + side seal + inner seal*1 + QZ
QZZZ	With end seal + side seal + inner seal*1 + metal scraper + QZ
QZKK	With double seals + side seal + inner seal*1 + metal scraper + QZ
QZGG	With LiCS + QZ
QZPP	With LiCS + side seal + inner seal*1 + QZ
QZSSHH	With end seal + side seal + inner seal*1 + LaCS + QZ
QZDDHH	With double seals + side seal + inner seal*1 + LaCS + QZ
QZZZHH	With end seal + side seal + inner seal*1 + metal scraper + LaCS + QZ
QZKKHH	With double seals + side seal + inner seal*1 + metal scraper + LaCS + QZ
QZJJHH*2	With end seal + side seal + inner seal*1 + LaCS + QZ + protector (serving also as metal scraper)
QZTTHH*2	With double seals + side seal + inner seal*1 + LaCS + QZ + protector (serving also as metal scraper)

*1 Some models are not equipped with inner seals.(See A1-458)
*2 QZJJHH and QZTTHH are available only for models SVR/SVS, NR/NRS-X and SRG.
Note1) HH type (with LaCS) for models SVR/SVS, NR/NRS-X, and SRG comes with a protector (see A1-467).
Contact THK if you want to use the Protector with other options.
Note2) Those models equipped with QZ Lubricator cannot have a grease nipple. When desiring a grease nipple for a model attached with QZ, contact THK.

● Significantly Extended Maintenance Interval

Attaching QZ Lubricator helps extend the maintenance interval throughout the whole load range from the light load area to the heavy load area.

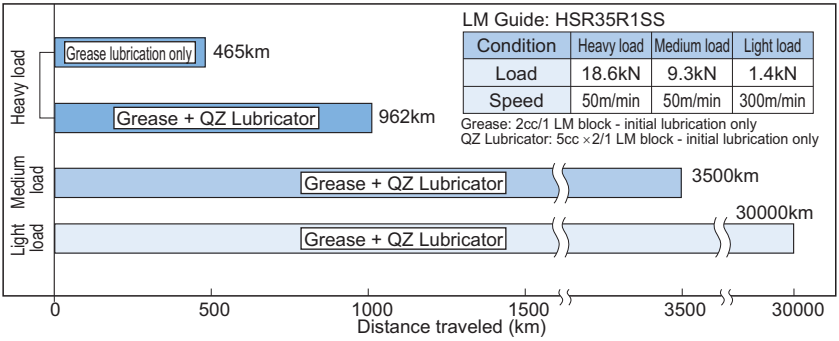

LM Guide Running Test without Replenishment of Lubricant

● Effective Use of Lubricant

Since the lubricator feeds the right amount of lubricant to the ball raceway, lubricant can be used efficiently.

[Test conditions] speed: 300 m/min

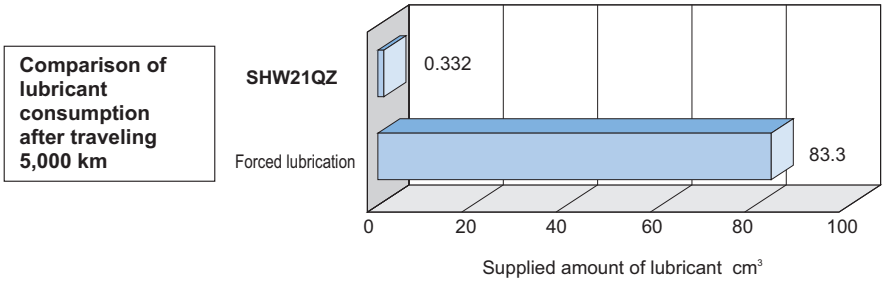

Amount of oil contained in QZ Lubricator
0.166cm³/ 2 units
(attached to both ends of the LM block)
=0.332cm³

Forced lubrication
0.03cm³/6min×16667min
=83.3cm³

Lubricant consumption is 1/250 less than forced lubrication.

● Effective in Helping Lubrication under Severe Environments

A 5,000 km durability test was conducted under severe environments (containing coolant and contaminated environment).

[Test conditions]

Model No.	① Caged Ball LM Guide #45	② Full-ball LM Guide #45
Load	8kN	6kN
Speed	60m/min	
Coolant	Immersed 48 hrs, dried 96 hrs	
Foreign material	Foundry dust (125 μm or less)	
Lubrication	AFA Grease + QZ	Super Multi 68 Oiling cycle: 0.1cc/shot Periodically lubricated every 16 min

[Test result]

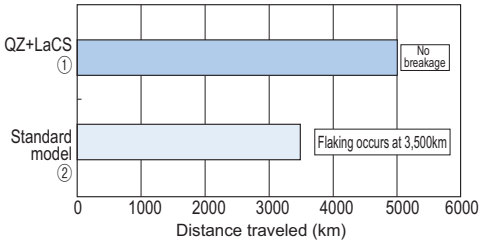

* When using the LM system under severe environment, use QZ Lubricator and Laminated Contact Scraper LaCS (see "Laminated Contact Scraper LaCS" on **A1-464**) in combination.

LM Block Dimension (Dimension L) with QZ Attached

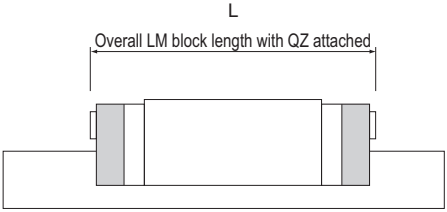

Unit: mm

Model No.		L								
		QZUU	QZSS	QZDD	QZZZ	QZKK	QZSSHH	QZDDHH	QZZZHH	QZKKHH
SHS	15C/V/R	84.4	84.4	89.8	86.8	92.2	100	105.4	101.2	106.6
	15LC/LV	99.4	99.4	104.8	101.8	107.2	115	120.4	116.2	121.6
	20C/V	99	99	105.4	103	109.4	115.4	121.8	117.8	124.2
	20LC/LV	118	118	124.4	122	128.4	134.4	140.8	136.8	143.2
	25C/V/R	114.4	114.4	121.6	120.4	127.6	132	139.2	134.4	141.6
	25LC/LV/LR	131.4	131.4	138.6	137.4	144.6	149	156.2	151.4	158.6
	30C/V/R	127.4	127.4	136	133.8	142.4	149.4	158	151.8	160.4
	30LC/LV/LR	152.4	152.4	161	158.8	167.4	174.4	183	176.8	185.4
	35C/V/R	145	145	154.8	152.4	162.2	168	177.8	170.4	180.2
	35LC/LV/LR	175	175	184.8	182.4	192.2	198	207.8	200.4	210.2
	45C/V/R	173	173	182.8	181.2	191	199	208.8	202.2	212
	45LC/LV/LR	207	207	216.8	215.2	225	233	242.8	236.2	246
	55C/V/R	205.4	205.4	216.6	214.2	225.4	232	243.2	235.2	246.4
	55LC/LV/LR	247.4	247.4	258.6	256.2	267.4	274	285.2	277.2	288.4
	65C/V	256.2	256.2	268.6	266.2	278.6	288	300.4	291.2	303.6
	65LC/LV	307.2	307.2	319.6	317.2	329.6	339	351.4	342.2	354.6
SSR	15XVY	59.3	59.3	65.1	62.7	68.5	75.5	81.3	76.7	82.5
	15XWY/XTBY	75.9	75.9	81.7	79.3	85.1	92.1	97.9	93.3	99.1
	20XV	66.2	66.2	73.1	72.1	79	83.7	90.6	86.1	93
	20XW/XTB	85	85	91.9	90.9	97.8	102.5	109.4	104.9	111.8
	25XVY	82.6	82.6	90	88.4	95.8	100	107.4	102.4	109.8
	25XWY/XTBY	105.6	105.6	113	111.4	118.8	123	130.4	125.4	132.8
	30XW	119.7	119.7	127.8	125.4	133.5	141	149.1	143.4	151.5
	35XW	134.3	134.3	143.3	141.3	150.3	156.9	165.9	159.3	168.3
SHW	12CAM/CRM	47	47	—	—	—	58	—	—	—
	12HRM	60.4	60.4	—	—	—	71.4	—	—	—
	14CAM/CRM	55.5	55.5	—	—	—	70.7	—	—	—
	17CAM/CRM	63	63	66	65.4	68.4	78.2	81.2	79.4	82.4
	21CA/CR	75	75	80	78.6	83.6	91.6	96.6	93.2	98.2
	27CA/CR	92.8	92.8	98.6	97.2	103	109.4	115.2	111.8	117.6
	35CA/CR	127	127	134.4	132	139.4	149	156.4	151.4	158.8
	50CA/CR	161	161	169.2	167.4	175.6	186	194.2	188.4	196.6

Note) Those models equipped with QZ Lubricator cannot have a grease nipple. When desiring a grease nipple for a model attached with QZ, contact THK.

Options

QZ Lubricator

Unit: mm

Model No.		L								
		QZUU	QZSS	QZDD	QZZZ	QZKK	QZSSHH	QZDDHH	QZZZHH	QZKKHH
SRS	7S	29	29	—	—	—	—	—	—	—
	7M	33.4	33.4	—	—	—	—	—	—	—
	7N	41	41	—	—	—	—	—	—	—
	7WS	32.5	32.5	—	—	—	—	—	—	—
	7WM	41	41	—	—	—	—	—	—	—
	7WN	50.9	50.9	—	—	—	—	—	—	—
	9XS	31.5	31.5	—	—	—	43.1	—	—	—
	9XM	40.8	40.8	—	—	—	52.4	—	—	—
	9XN	50.8	50.8	—	—	—	62.4	—	—	—
	9WS	36.5	36.5	—	—	—	48.1	—	—	—
	9WM	49	49	—	—	—	60.6	—	—	—
	9WN	60.7	60.7	—	—	—	72.3	—	—	—
	12S	35	35	—	—	—	46.6	—	—	—
	12M	44.4	44.4	—	—	—	56	—	—	—
	12N	57.1	57.1	—	—	—	69.1	—	—	—
	12WS	40.5	40.5	—	—	—	52.1	—	—	—
	12WM	54.5	54.5	—	—	—	66.1	—	—	—
	12WN	69.5	69.5	—	—	—	81.1	—	—	—
	15S	44	44	—	—	—	58.2	—	—	—
	15M	55	55	—	—	—	69.2	—	—	—
	15N	72.8	72.8	—	—	—	87	—	—	—
	15WS	53.5	53.5	—	—	—	67.7	—	—	—
	15WM	67.5	67.5	—	—	—	81.7	—	—	—
	15WN	86.5	86.5	—	—	—	100.9	—	—	—
	20M	66	66	—	—	—	81.2	—	—	—
	25M	97	97	—	—	—	112.6	—	—	—
SCR	15S	84.4	84.4	89.8	86.8	92.2	100.4	105.4	101.4	106.9
	20S	99	99	105.4	103	109.4	115.5	122	118	124.5
	20	118	118	124.4	122	128.4	134.5	141	137	143.5
	25	131.4	131.4	138.6	137.4	144.6	149	156.2	151.4	158.6
	30	152.4	152.4	161	158.8	167.4	174.4	183	176.8	185.4
	35	175	175	184.8	182.4	192.2	198	207.8	200.4	210.2
	45	207	207	216.8	215.2	225	233	242.8	236.2	246
	65	307.2	307.2	319.6	317.2	329.6	339	351.4	342.2	354.6

Note) Those models equipped with QZ Lubricator cannot have a grease nipple. When desiring a grease nipple for a model attached with QZ, contact THK.

Unit: mm

Model No.		L								
		QZUU	QZSS	QZDD	QZZZ	QZKK	QZSSHH	QZDDHH	QZZZHH	QZKKHH
HSR	15A/B/R/YR	76.6	76.6	84.6	81.2	89.2	95.8	103.8	97	105
	20A/B/R/CA/CB/YR	93	93	101.2	98.8	107	110.4	118.6	112.8	121
	20LA/LB/LR/HA/HB	109	109	117.2	114.8	123	126.4	134.6	128.8	137
	25A/B/R/CA/CB/YR	100.9	100.9	108.9	106.6	114.6	118.2	126.2	120.6	128.6
	25LA/LB/LR/HA/HB	120	120	128	125.7	133.7	137.3	145.3	139.5	147.7
	30A/B/R/CA/CB/YR	115.8	115.8	123.8	121.5	129.5	137.1	145.1	139.5	147.5
	30LA/LB/LR/HA/HB	138.4	138.4	146.4	144.1	152.1	159.7	167.7	162.1	170.1
	35A/B/R/CA/CB/YR	129	129	138.8	135.8	145.6	151.4	161.2	153.8	163.6
	35LA/LB/LR/HA/HB	154.4	154.4	164.2	161.2	171	176.8	186.6	179.2	189
	45A/B/R/CA/CB/YR	168.6	168.6	178.4	173.4	183.2	198	207.8	201.2	211
	45LA/LB/LR/HA/HB	200.4	200.4	210.2	205.2	215	229.8	239.6	233	242.8
	55A/B/R/CA/CB/YR	197.2	197.2	208.4	202	213.2	227.2	238.4	230.4	241.6
	55LA/LB/LR/HA/HB	235.3	235.3	246.5	240.1	251.3	265.3	276.5	268.5	279.7
	65A/B/R/CA/CB/YR	221.4	221.4	233.8	226.6	239	257	269.4	260.2	272.6
	65LA/LB/LR/HA/HB	280.9	280.9	293.3	286.1	298.5	316.5	328.9	319.7	332.1
SRN	35C/R	155	155	162.8	163.4	171.2	178.6	186.4	181	188.8
	35LC/LR	185	185	192.8	193.4	201.2	208.6	216.4	211	218.8
	45C/R	185	185	194.2	194.2	203.4	212	221.2	215.2	224.5
	45LC/LR	220	220	229.2	229.2	238.4	247	256.2	250.2	259.4
	55C/R	225	225	234.2	234.2	243.4	252	261.2	255.2	264.4
	55LC/LR	275	275	284.2	284.2	293.4	302	311.2	305.2	314.4
	65LC/LR	343	343	354.2	354.2	370.4	380.4	391.6	378.6	389.8
SRW	70	220	220	229.2	229.2	238.4	247	256.2	250.2	259.4
	85	275	275	284.2	284.2	293.4	302	311.2	305.2	314.4
	100	343	343	354.2	354.2	370.4	380.4	391.6	378.6	389.8

Note) Those models equipped with QZ Lubricator cannot have a grease nipple. When desiring a grease nipple for a model attached with QZ, contact THK.

QZ Lubricator

Unit: mm

Model No.		L										
		QZUU	QZSS	QZDD	QZZZ	QZKK	QZSSHH	QZDDHH	QZZZHH	QZKKHH	QZJJHH	QZTTHH
SVS/ SVR NR/ NRS-X	25R/C	102.8	102.8	108	108.5	113.7	116.8	122.0	—	—	122.5*	127.7*
	25LR/LC	122	122	127.2	127.7	132.9	136.0	141.2	—	—	141.7*	146.9*
	30R/C	118	118	124.6	123.7	130.3	135.2	141.8	—	—	140.9*	147.5*
	30LR/LC	140.5	140.5	147.1	146.2	152.8	157.7	164.3	—	—	163.4*	170.0*
	35R/C/RH/CH	139.5	139.5	146.5	146.3	153.3	156.7	163.7	—	—	163.5*	170.5*
	35LR/LC/LRH/LCH	165	165	172	171.8	178.8	182.2	189.2	—	—	189.0*	196.0*
	45R/C/RH/CH	168.2	168.2	175.2	175.8	182.8	188.2	195.2	—	—	195.8*	202.8*
	45LR/LC/LRH/LCH	201	201	208	208.6	215.6	221.0	228.0	—	—	228.6*	235.6*
	55R/C/RH/CH	201.4	201.4	208.4	209.0	216.0	222.4	229.4	—	—	231.1*	238.1*
	55LR/LC/LRH/LCH	238.6	238.6	245.6	246.2	253.2	259.6	266.6	—	—	268.3*	275.3*
	65R/C	224.4	224.4	231.8	233.1	240.5	248.8	256.2	—	—	257.5*	264.9*
	65LR/LC	284.4	284.4	291.8	293.1	300.5	308.8	316.2	—	—	317.5*	324.9*
SRG	15A/V	90.6	90.6	92.6	—	—	—	—	—	—	—	—
	20A/V	107.6	107.6	109.6	111	113	125.2	127.2	127.6	129.6	—	—
	20LA/LV	127.6	127.6	129.6	131	133	145.2	147.2	147.6	149.6	—	—
	25C/R	125.5	125.5	130.5	130.5	135.5	145.3	151.7	147.7	154.1	—	—
	25LC/LR	145.1	145.1	150.1	150.1	155.1	164.9	171.3	167.3	173.7	—	—
	30C/R	141	141	148	146	153	160.8	169.2	164.6	171.6	—	—
	30LC/LR	165	165	172	170	177	184.8	193.2	188.6	195.6	—	—
	35C/R	155	155	162.8	163.4	171.2	172.6	180.4	181	188.8	180.8*	188.6*
	35LC/LR	185	185	192.8	193.4	201.2	202.6	210.4	211	218.8	210.8*	218.6*
	35SLC/SLR	210.8	210.8	218.6	219.2	227	228.4	236.2	236.8	244.6	236.6*	244.4*
	45C/R	185	185	194.2	194.2	203.4	205.6	214.8	214.8	224	214.6*	223.8*
	45LC/LR	220	220	229.2	229.2	238.4	240.6	249.8	249.8	259	249.6*	258.8*
	45SLC/SLR	261.5	261.5	270.7	270.7	279.9	282.1	291.3	291.3	300.5	291.1*	300.3*
	55C/R	225	225	234.2	234.2	243.4	245.6	254.8	254.8	264	254.6*	263.8*
	55LC/LR	275	275	284.2	284.2	293.4	295.6	304.8	304.8	314	304.6*	313.8*
	55SLC/SLR	332	332	341.2	341.2	350.4	352.6	361.8	361.8	371	361.6*	370.8*
	65C/V	284.9	284.9	296.1	296.1	307.3	308.9	320.1	320.1	331.3	319.9*	331.1*
	65LC/LV	343	343	354.2	354.2	365.4	367	378.2	378.2	389.4	378*	389.2*
	65LC/SLV	420	420	431.2	431.2	442.4	444	455.2	455.2	466.4	455*	466.2*

∗ The overall LM block length (L) of YY type (with side scraper) is also the same.

Note1) For models SVR/SVS and SRG, we recommend attaching a protector. For the dimensions of QZZZHH and QZKKHH, contact THK. For details of the symbols of options, see A1-494.

Note2) Those models equipped with QZ Lubricator cannot have a grease nipple. When desiring a grease nipple for a model attached with QZ, contact THK.

Model number coding

SHS25 LC 2 QZ KKHH C0 +1200L P Z T -Ⅱ

- SHS25: Model number
- LC: Type of LM block
- 2: No. of LM blocks used on the same rail
- QZ: With QZ Lubricator (*1)
- KKHH: Contamination protection accessory symbol (*2)
- C0: Radial clearance symbol (*3)
  - Normal (No symbol)
  - Light preload (C1)
  - Medium preload (C0)
- +1200L: LM rail length (in mm)
- P: Accuracy symbol (*4)
  - Normal grade (No Symbol)
  - High accuracy grade (H)
  - Precision grade (P)/Super precision grade (SP)
  - Ultra precision grade (UP)
- Z: With steel tape
- T: Symbol for LM rail jointed use
- -Ⅱ: Symbol for No. of rails used on the same plane (*5)

(*1) See A1-487. (*2) See A1-494. (*3) See A1-70. (*4) See A1-75. (*5) See A1-13.

Note) This model number indicates that a single-rail unit constitutes one set. (i.e., required number of sets when 2 rails are used in parallel is 2 at a minimum.)
Those models equipped with QZ Lubricator cannot have a grease nipple.

List of Parts Symbols

- For supported model numbers, see the correspondence table of options by model number on **A1-458**.
- For the overall block length (dimension L) of each model with seal options attached, see **A1-470** to **A1-477**.
- For the overall block length (dimension L) with the QZ option attached, see **A1-490** to **A1-493**.

[Symbols for Seals and Metal Scraper]

Symbol	Configuration of seal and metal scraper
No Symbol	Without seal
UU	End seal
SS	With end seal + side seal + inner seal*
DD	With double seals + side seal + inner seal*
ZZ	With end seal + side seal + inner seal* + metal scraper
KK	With double seals + side seal + inner seal* + metal scraper

* Some models are not equipped with inner seals.(See **A1-458**)

[Symbols for QZ Lubricator and Laminated Contract Scraper LaCS]

Symbol	Configuration of options	Example
＊＊HH	(Seal and metal scraper) + LaCS	UUHH
＊＊HHYY	(Seal and metal scraper) + LaCS + side scraper	DDHHYY
QZ＊＊	With QZ + (seal and metal scraper)	QZZZ
QZ＊＊HH	With QZ + (seal and metal scraper) + LaCS	QZZZHH
QZ＊＊HHYY	With QZ + (seal and metal scraper) + LaCS + side scraper	QZKKHHYY

Note1) ＊＊ in the table represents the symbol for a seal and metal scraper.
Note2) Those models equipped with QZ Lubricator cannot have a grease nipple. When desiring a grease nipple for a model attached with QZ, contact THK.

[Symbols for Light-Resistance Contact Seal LiCS]

Symbol	Configuration of options
GG	LiCS
PP	With LiCS + side seal + inner seal*
QZGG	With QZ + LiCS
QZPP	With QZ + LiCS + side seal + inner seal*

* Some models are not equipped with inner seals.(See **A1-458**)

Note) Those models equipped with QZ Lubricator cannot have a grease nipple. When desiring a grease nipple for a model attached with QZ, contact THK.

[Symbols for Protector]

* Supported models: SVR/SVS, SRG, NR/NRS, and NR-X/NRS-X

Symbol	Configuration of options
JJHH	With End seal + side seal + inner seal* + LaCS + protector (also has a metal scraper function)
TTHH	With Double seals + side seal + inner seal* + LaCS + protector (also has a metal scraper function)
JJHHYY	With End seal + side seal + inner seal* + LaCS + protector (also has a metal scraper function) + side scraper
TTHHYY	With Double seals + side seal + inner seal* + LaCS + protector (also has a metal scraper function) + side scraper
QZJJHH	With QZ + end seal + side seal + inner seal* + LaCS + protector (also has a metal scraper function)
QZTTHH	With QZ + double seals + side seal + inner seal* + LaCS + protector (also has a metal scraper function)
QZJJHHYY	With QZ + end seal + side seal + inner seal* + LaCS + protector (also has a metal scraper function) + side scraper
QZTTHHYY	With QZ + double seals + side seal + inner seal* + LaCS + protector (also has a metal scraper function) + side scraper

* Some models are not equipped with inner seals.(See A1-458)

Note1) HH type (with LaCS) for models SVR/SVS, SRG, NR/NRS, and NR-X/NRS-X comes with a protector (see A1-467).
The protector also acts as a metal scraper.
Contact THK if you want to use the Protector with other options.

Note2) Those models equipped with QZ Lubricator cannot have a grease nipple. When desiring a grease nipple for a model attached with QZ, contact THK.

QZZZHH

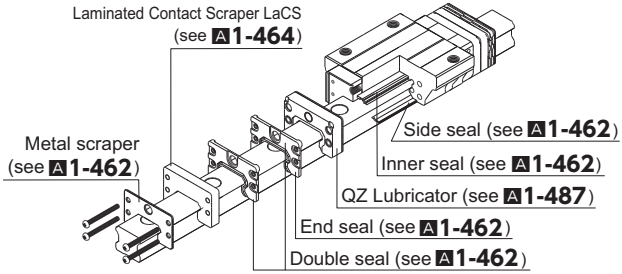

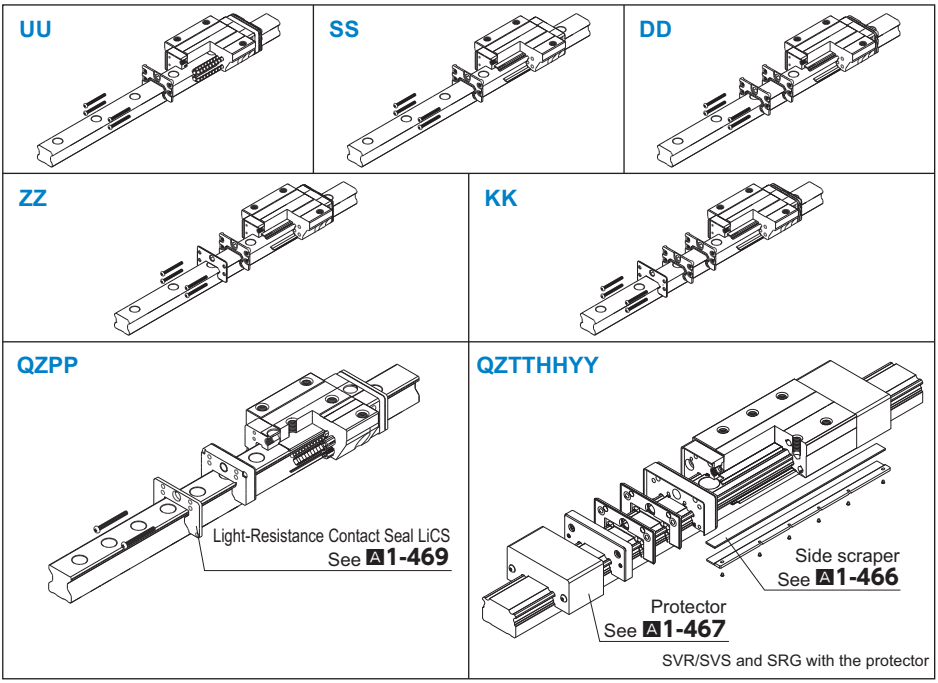

Model number coding

SVR45 LR 2 QZ TTHH C0 +1200L P T -Ⅱ

- SVR45: Model No.
- LR: Type of LM block
- 2: No. of LM blocks used on the same rail
- QZ: With QZ Lubricator
- TTHH: Symbol for dust-proof accessory
- C0: Radial clearance symbol
  Normal (No symbol)/
  Light preload (C1)
  Medium preload (C0)
- +1200L: LM rail length (in mm)
- P: Accuracy symbol
  Normal grade (No Symbol)/High accuracy grade (H)/
  Precision grade (P)Super precision grade (SP)/
  Ultra precision grade (UP)
- T: Symbol for LM rail jointed use
- -Ⅱ: Symbol for No. of rails used on the same plane

Note) Those models equipped with QZ Lubricator cannot have a grease nipple. When desiring a grease nipple for a model attached with QZ, contact THK.

Dedicated Bellows

●For the supported models, see the table of options by model number on A1-458.
●For the dedicated bellows dimensions, see A1-498 to A1-509.

Item name	Schematic diagram / mounting location	Purpose/location of use
Dedicated Bellows	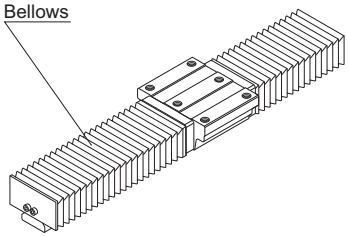	Used in locations exposed to dust or cutting chips

Bellows

[Dedicated Bellows JSH for Model SHS]

The table below shows the dimensions of dedicated bellows JSH for model SHS. Specify the corresponding model number of the desired bellows from the table.

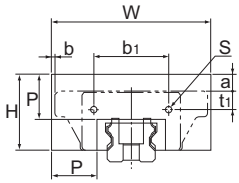

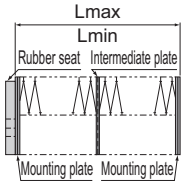

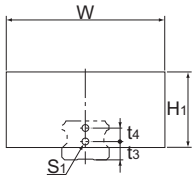

Models SHS15 to 30

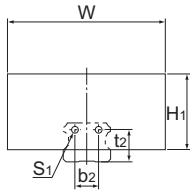

Models SHS35 to 65

Unit: mm

Model No.		Main dimensions												Supported model numbers	
							t_1								
		W	H	H_1	P	b_1	C	V	R	b_2	t_2	t_3	t_4		
JSH	15	53	26	26	15	22.4	4	4	8	—	—	8	—	SHS	15
	20	60	30	30	17	27.6	7.5	7.5	—	—	—	8	6		20
	25	75	36	36	20	38	9.1	9.1	13.1	—	—	9	7		25
	30	80	38	38	20	44	11	11	14	—	—	11	8		30
	35	86	40.5	40.5	20	50	11	11	18	20	21.5	—	—		35
	45	97	46	46	20	64.6	13.5	13.5	23.5	26	26.5	—	—		45
	55	105	48	48	20	68	13	13	23	30	31.5	—	—		55
	65	126	63	63	25	80	18	18	—	34	45	—	—		65

Unit: mm

Supported model numbers		Other dimensions								A $\left(\frac{Lmax}{Lmin}\right)$
		Mounting bolt		a			b			
		S	S_1	C	V	R	C	V	R	
SHS	15	*M2×8ℓ	M4×8ℓ	5	5	1	3	9.5	9.5	5
	20	M2.6×8ℓ	M3×6ℓ	5	5	—	–1.5	8	—	6
	25	M3×8ℓ	M3×6ℓ	6	6	2	2.5	13.5	13.5	7
	30	M3×10ℓ	M3×6ℓ	3	3	0	–5	10	10	7
	35	M4×10ℓ	M4×8ℓ	0	0	–7	–7	8	8	7
	45	M4×12ℓ	M4×8ℓ	–5	–5	–15	–11.7	5.5	5.5	7
	55	M5×12ℓ	M5×10ℓ	–9	–9	–19	–17.5	2.5	2.5	7
	65	M6×14ℓ	M6×12ℓ	–8	–8	—	–22	0	—	9

* Use self-tapping screws as the mounting screws on the LM block side of the JSH15.
Note1) When desiring to use the dedicated bellows other than in horizontal mount (i.e., vertical, wall and inverted mount), or when desiring a heat-resistant type of bellows, contact THK.
Note2) For lubrication when using the dedicated bellows, contact THK.
Note3) When using the dedicated bellows, the LM block and LM rail need to be machined so that the bellows can be mounted. Be sure to indicate that the dedicated bellows is required when ordering the LM Guide.

Model number coding

JSH35 - 60/420

Model number of bellows for SHS35

Dimensions of the bellows (length when compressed / length when extended)

Note) The length of the bellows is calculated as follow.

$$Lmin = \frac{S}{(A-1)}$$ S: Stroke length (mm)

$$Lmax = Lmin \cdot A$$ A: Extension rate

[Dedicated Bellows JSSR-X for Model SSR]

The table below shows the dimensions of dedicated bellows JSSR-X for model SSR. Specify the corresponding model number of the desired bellows from the table.

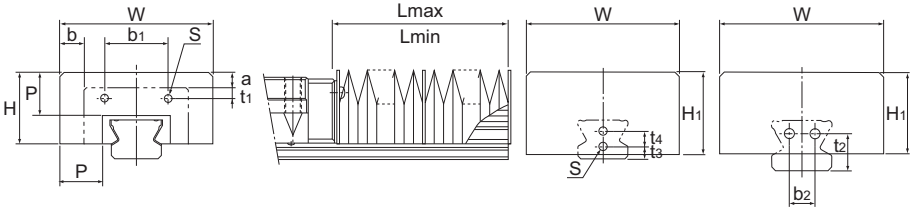

Models SSR15X to 25X Models SSR30X and 35X

Unit: mm

Model No.		Main dimensions														A (Lmax/Lmin)	Supported model numbers	
		W	H	H_1	P	b_1	t_1	b_2	t_2	t_3	t_4	Mounting bolt S	a	b XW/XV	b XTB			
JSSR	15X	51	24	26	15	20.5	4.7	—	—	8	—	M3×5ℓ	5	8.5	–0.5	5	SSR	15X
	20X	58	26	30	15	25	4.2	—	—	6	6	M3×5ℓ	4	8	–0.5	5		20X
	25X	71	33	38	20	29	5	—	—	6	7	M3×5ℓ	7	11.5	–1	7		25X
	30X	76	37.5	37.5	20	35	9	12	17	—	—	M4×6ℓ	3	8	—	7		30X
	35X	84	39	39	20	44	7	14	20	—	—	M5×10ℓ	2	7	—	7		35X

Note1) When desiring to use the dedicated bellows other than in horizontal mount (i.e., vertical, wall and inverted mount), or when desiring a heat-resistant type of bellows, contact THK.
Note2) For lubrication when using the dedicated bellows, contact THK.
Note3) When using the dedicated bellows, the LM block and LM rail need to be machined so that the bellows can be mounted. Be sure to indicate that the dedicated bellows is required when ordering the LM Guide.

Model number coding

JSSR35X - 60/420

Model number of bellows for SSR35X

Dimensions of the bellows (length when compressed / length when extended)

Note) The length of the bellows is calculated as follow.

$$Lmin = \frac{S}{(A-1)}$$ S: Stroke length (mm)

$$Lmax = Lmin \cdot A$$ A: Extension rate

[Model JSV Dedicated Bellows for Models SVR/SVS/NR-X/NRS-X]

For models SVR/SVS and NR/NRS-X, the model JSV simplified bellows is available. Contact THK for details.

[Dedicated Bellows JSHW for Model SHW]

The table below shows the dimensions of dedicated bellows JSHW for model SHW. Specify the corresponding model number of the desired bellows from the table.

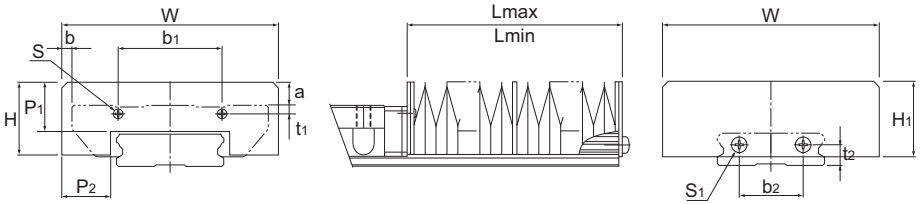

Unit: mm

Model No.		Main dimensions									Supported model numbers	
		W	H	H_1	P_1	P_2	b_1	t_1	b_2	t_2		
JSHW	17	68	22	23	15	15.4	39	2.6	18	6	SHW	17
	21	75	25	26	17	17	35.8	2.9	22	7		21
	27	85	33.5	33.5	20	20	25	3.5	20	10		27
	35	120	35	35	20	20	75	7.5	40	13		35
	50	164	42	42	20	20	89.4	14	50	16		50

Unit: mm

Model No.		Other dimensions					$\left(\frac{A}{\frac{Lmax}{Lmin}}\right)$
		Mounting bolt		a	b		
		*S	S_1		Model CA	Model CR	
JSHW	17	M2×4ℓ	M3×6ℓ	8	4	9	5
	21	M2×5ℓ	M3×6ℓ	8	3.5	10.5	6
	27	M2.6×6ℓ	M3×6ℓ	10	2.5	11.5	7
	35	M3×8ℓ	M3×6ℓ	6	0	10	7
	50	M4×12ℓ	M4×8ℓ	—	1	17	7

Note1) When desiring to use the dedicated bellows other than in horizontal mount (i.e., vertical, wall and inverted mount), or when desiring a heat-resistant type of bellows, contact THK.
Note2) For lubrication when using the dedicated bellows, contact THK.
Note3) For the mounting bolts marked with "*", use tapping screws.
Note4) When using the dedicated bellows, the LM block and LM rail need to be machined so that the bellows can be mounted. Be sure to indicate that the dedicated bellows is required when ordering the LM Guide.

Model number coding

JSHW21 - 60/360

Model number of bellows for SHW21

Dimensions of the bellows (length when compressed / length when extended)

Note) The length of the bellows is calculated as follow.

$$Lmin = \frac{S}{(A-1)}$$ S: Stroke length (mm)

$Lmax = Lmin \cdot A$ A: Extension rate

[Dedicated Bellows JH for Model HSR]

The table below shows the dimensions of dedicated bellows JH for model HSR. Specify the corresponding model number of the desired bellows from the table.

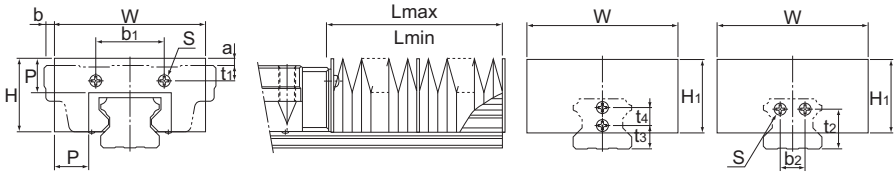

Models HSR15 to 30 Models HSR35 to 85

Unit: mm

Model No.		Main dimensions																	A (Lmax/Lmin)	Supported model numbers	
		W	H	H_1	P	b_1	t_1 A/B	t_1 R	b_2	t_2	t_3	t_4	Mounting bolt S	a A/B	a R	b A/B	b R				
JH	15	55	27	30	15	25	2.5	6.5	—	—	10	—	*M4×8ℓ	7.5	3.5	–4	–10.5	5	HSR	15
	20	66	32	35	17	34	5	5	—	—	6	8	M3×6ℓ	7	7	–1.5	–11	6		20
	25	78	38	38	20	30	7	11	—	—	10	8	M3×6ℓ	8.5	4.5	–4	–15	7		25
	30	84	42	42	20	40	8	11	—	—	11	10	M4×8ℓ	7	4	3	–12	7		30
	35	88	43	43	20	40	9	16	14	23	—	—	M4×8ℓ	4	—	6	–9	7		35
	45	100	51	51	20	58	10	20	20	29	—	—	M5×10ℓ	—	—	10	–7	7		45
	55	108	54	54	20	66	11	21	26	35	—	—	M5×10ℓ	—	—	16	–4	7		55
	65	132	68	68	20	80	19	19	32	42	—	—	M6×12ℓ	—	—	19	–3	7		65
	85	170	88	88	30	105	23	23	44	50	—	—	M6×12ℓ	—	—	22.5	–7	10		85

Note1) For model JH15's location marked with "*", mounting bolts are used only on the LM rail side while the LM block side uses M2 x 5 (nominal) tapping screws.
Note2) When desiring to use the dedicated bellows other than in horizontal mount (i.e., vertical, wall and inverted mount), or when desiring a heat-resistant type of bellows, contact THK.
Note3) For lubrication when using the dedicated bellows, contact THK.
Note4) When using the dedicated bellows, the LM block and LM rail need to be machined so that the bellows can be mounted. Be sure to indicate that the dedicated bellows is required when ordering the LM Guide.

Model number coding

JH25 - 60/420

Model number of bellows for HSR25

Dimensions of the bellows (length when compressed / length when extended)

Note) The length of the bellows is calculated as follow.

$$Lmin = \frac{S}{(A-1)}$$ S: Stroke length (mm)

$$Lmax = Lmin \cdot A$$ A: Extension rate

[Dedicated Bellows DH for Model HSR]

For models HSR15, 20 and 25, bellows DH, which has the following features, is also available other than the dedicated bellows JH. Specify the corresponding model number of the desired bellows from the table.

● Features

(1) Has a width and height smaller than the conventional product so that any part of the bellows does not stick out of the top face of the LM block. The extension rate is equal to or greater than that of the conventional type.
(2) Has an intermediate plate for each crest so that it will not easily lift and the bellows can be used with vertical mount, wall mount and slant mount.
(3) Operable at high speed, at up to 120 m/min.
(4) Since a Velcro tape can be used to install the bellows, a regular-size model can be cut to the desired length, or two or more regular-size bellows can be taped together.
(5) Can be installed using screws just as bellows JH.
In this case, a plate (thickness: 1.6 mm) must be placed between the bellows and the LM bock. Contact THK for details.

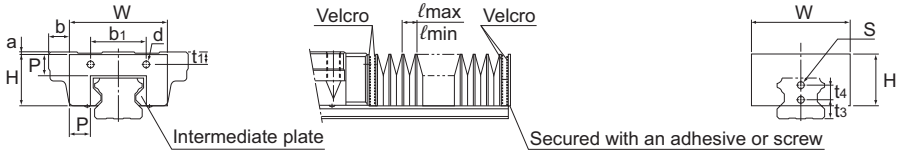

Unit: mm

Model No.		Main dimensions																			Supported model numbers	
						t_1						a		b				Extension rate		Factor		
		W	H	P	b_1	A/B	R	t_3	t_4	d	s	A/B	R	A/B	R	ℓmax	ℓmin	A	E	k		
DH	15	35	19.5	8.5	25	2.5	6.5	10	—	ϕ2.5	ϕ5	0	4	6	–0.5	10	2.5	4	2	1.2	HSR	15
	20	45	25	10	34	5	5	6	8	ϕ4	ϕ4	0	0	9	–0.5	13	2.5	5	2	1.3		20
	25	52	29.5	12	30	7	11	10	8	ϕ3.5	ϕ3.5	0	4	9	–2	15	3	5	2	1.3		25

Note1) For lubrication when using the dedicated bellows, contact THK.
Note2) When using the dedicated bellows, the LM block and LM rail need to be machined so that the bellows can be mounted. Be sure to indicate that the dedicated bellows is required when ordering the LM Guide.

Model number coding

DH20 - 50/250

Model number of bellows for HSR20

Dimensions of the bellows (length when compressed / length when extended)

Note) The maximum length of the bellows itself is calculated as follows.
Lmax (Lmin) = ℓmax (ℓmim) ×200
Example of calculating bellows dimensions:
When the stroke of model HSR20 is: ℓs=530mm

$$Lmin = \frac{\ell s}{(A-1)} = \frac{530}{4} = 132.5 \fallingdotseq 135$$

$$Lmax = A \cdot Lmin = 5 \times 135 = 675$$

Number of required crests n

$$n = \frac{Lmax}{P \cdot k} = \frac{675}{10 \times 1.3} = 51.9 \fallingdotseq 52 \text{ crests}$$

$$Lmin = n \cdot \ell min + E = 52 \times 2.5 + 2 = 132$$

(E indicates the plate thickness of 2)
Therefore, the model number of the required bellows is DH20-132/675.

[Dedicated Bellows JS for Model SR]

The table below shows the dimensions of dedicated bellows JS for model SR. Specify the corresponding model number of the desired bellows from the table.

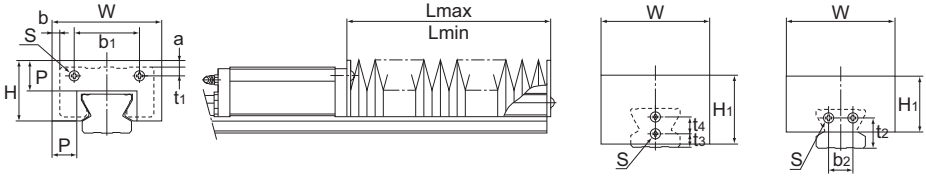

Models SR15 to 25 Models SR30 to 70

Unit: mm

Model No.		Main dimensions														A (Lmax/Lmin)	Supported model numbers	
		W	H	H_1	P	b_1	t_1	b_2	t_2	t_3	t_4	Mounting bolt S	a	b W/V	b TB/SB			
JS	15	51	24	26	15	22	3.4	—	—	8	—	M3×6ℓ	5	8.5	–0.5	5	SR	15
	20	58	26	30	15	25	4.2	—	—	6	6	M3×6ℓ	4	8	–0.5	5		20
	25	71	33	38	20	29	5	—	—	6	7	M3×6ℓ	7	11.5	–1	7		25
	30	76	37.5	37.5	20	42	5	12	17	—	—	M4×8ℓ	3	8	–7	7		30
	35	84	39	39	20	44	6.5	14	20	—	—	M5×10ℓ	1.5	7	–8	7		35
	45	95	47.5	47.5	20	60	8	22	27	—	—	M5×10ℓ	–1.5	5	–12.5	7		45
	55	108	55.5	55.5	25	70	10	24	28	—	—	M6×12ℓ	–0.5	4	–16	9		55
	70	144	67	67	30	90	13	34	35	—	—	M6×12ℓ	–3	9	—	10		70

Note1) When desiring to use the dedicated bellows other than in horizontal mount (i.e., vertical, wall and inverted mount), or when desiring a heat-resistant type of bellows, contact THK.
Note2) For lubrication when using the dedicated bellows, contact THK.
Note3) When using the dedicated bellows, the LM block and LM rail need to be machined so that the bellows can be mounted. Be sure to indicate that the dedicated bellows is required when ordering the LM Guide.

Model number coding

JS55 - 60/540

Model number of bellows for SR55

Dimensions of the bellows (length when compressed / length when extended)

Note) The length of the bellows is calculated as follow.

$$Lmin = \frac{S}{(A-1)}$$ S: Stroke length (mm)

$Lmax = Lmin \cdot A$ A: Extension rate

[Dedicated Bellows DS for Model SR]

For models SR15, 20 and 25, bellows DS, which has the following features, is also available other than the dedicated bellows JS. Specify the corresponding model number of the desired bellows from the table.

● Features

(1) Has a width and height smaller than the conventional product so that any part of the bellows does not stick out of the top face of the LM block. The extension rate is equal to or greater than that of the conventional type.
(2) Has an intermediate plate for each crest so that it will not easily lift and the bellows can be used with vertical mount, wall mount and slant mount.
(3) Operable at high speed, at up to 120 m/min.
(4) Since a Velcro tape can be used to install the bellows, a regular-size model can be cut to the desired length, or two or more regular-size bellows can be taped together.
(5) Can be installed using screws just as the conventional type.
In this case, a plate (thickness: 1.6 mm) must be placed between the bellows and the LM bock. Contact THK for details.

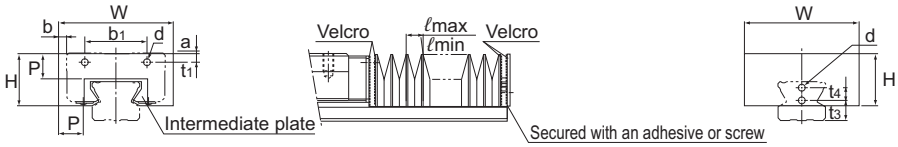

Unit: mm

Model No.		Main dimensions																Supported model numbers	
											b				Extension rate		Factor		
		W	H	P	b_1	t_1	t_3	t_4	d	a	W/V	TB/SB	ℓmax	ℓmin	A	E	k		
DS	15	38	19	10	22	3.4	8	—	3.5	0	2	−7	13	2.5	5	2	1.3	SR	15
	20	49	22	10	25	4.2	6	6	4	0	3.5	−5	13	2.5	5	2	1.3		20
	25	56	26	12	29	5	6	7	4	0	4	−8.5	15	3	5	2	1.3		25

Note1) For lubrication when using the dedicated bellows, contact THK.
Note2) When using the dedicated bellows, the LM block and LM rail need to be machined so that the bellows can be mounted. Be sure to indicate that the dedicated bellows is required when ordering the LM Guide.

Model number coding

DS20 - 50/250

Model number of bellows for SR20

Dimensions of the bellows (length when compressed / length when extended)

Note) The maximum length of the bellows itself is calculated as follows.
Lmax (Lmin) = ℓmax (ℓmin) ×200
Example of calculating bellows dimensions:
When the stroke of model SR20 is: ℓs=530mm

$$Lmin = \frac{\ell s}{(A-1)} = \frac{530}{4} = 132.5 \fallingdotseq 135$$

$$Lmax = A \cdot Lmin = 5 \times 135 = 675$$

Number of required crests n

$$n = \frac{Lmax}{P \cdot k} = \frac{675}{10 \times 1.3} = 51.9 \fallingdotseq 52 \text{ crests}$$

$$Lmin = n \cdot \ell min + E = 52 \times 2.5 + 2 = 132$$

(E indicates the plate thickness of 2)
Therefore, the model number of the required bellows is DS20-132/675.

[Simplified Bellows JN Dedicated for Models NR/NRS]

For models NR/NRS, bellows are available.Fig.1 To gain a higher contamination protection effect, attach a telescopic cover outside the bellows after the bellows are mounted.

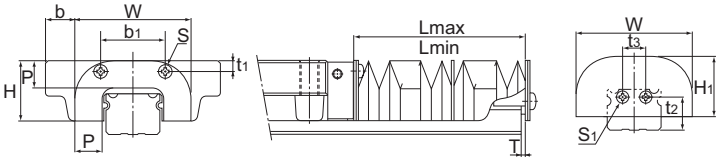

Models NR/NRS 75 to 100

Unit: mm

Model No.		Main dimensions												$\left(\frac{A}{\frac{Lmax}{Lmin}}\right)$	Supported model numbers	
		W	H	H_1	P	b_1	t_1	t_2	t_3	Mounting bolt S	Mounting bolt S_1	b A,LA B,LB	T			
JN	75	145	64	64	30	80	10.5	34.2	26	M6×12ℓ	M6×5ℓ	25	3.2	20	NR/NRS	75
	85	156	70.5	70.5	30	110	15.5	39.5	28	M6×12ℓ	M6×5ℓ	39.5	3.2	20		85
	100	200	82	82	30	140	15	40	34	M8×16ℓ	M6×5ℓ	30	3.2	20		100

Note1) When desiring to use the bellows other than in horizontal mount (i.e., vertical, wall and inverted mount), or when desiring a heat-resistant type of bellows, contact THK.
Note2) For lubrication when using the bellows, contact THK.
Note3) When using the bellows, the LM block and LM rail need to be machined so that the bellows can be mounted. Be sure to indicate that the bellows is required when ordering the LM Guide.

Model number coding

JN75 - 60/420

Model number of bellows for NR/NRS

Dimensions of the bellows (length when compressed / length when extended)

Note) The length of the bellows is calculated as follow.

$$Lmin = \frac{S}{(A-1)}$$ S: Stroke length (mm)

$Lmax = Lmin \cdot A$ A: Extension rate

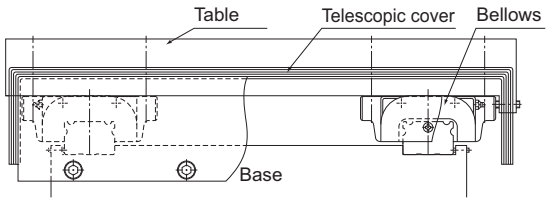

Fig.1 Example of Mounting the Bellows

[Dedicated Bellows JHRW for Model HRW]

The table below shows the dimensions of dedicated bellows JHRW for model HRW. Specify the corresponding model number of the desired bellows from the table.

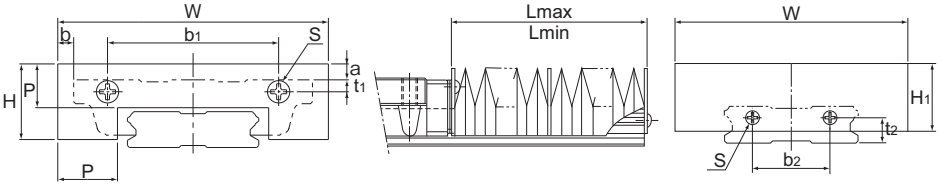

Unit: mm

Model No.		Main dimensions												A (Lmax / Lmin)	Supported model numbers	
		W	H	H_1	P	b_1	t_1	b_2	t_2	Mounting bolt S	a	b Model CA	b Model CR			
JHRW	17	68	22	23	15	43	3	18	6	*M3×6ℓ	8	4	9	5	HRW	17
	21	75	25	26	17	48	3	22	7	M3×6ℓ	8	3.5	10.5	6		21
	27	85	33.5	33.5	20	48	3	20	10	M3×6ℓ	10	2.5	11.5	7		27
	35	120	35	35	20	75	3.5	40	13	M3×6ℓ	6	0	10	7		35
	50	164	42	42	20	100	9	50	16	M4×8ℓ	–3	1	17	7		50

Note1) For model JHRW17's location marked with "*", mounting bolts are used only on the LM rail side while the LM block side uses M2.5 x 8 (nominal) tapping screws.
Note2) When desiring to use the dedicated bellows other than in horizontal mount (i.e., vertical, wall and inverted mount), or when desiring a heat-resistant type of bellows, contact THK.
Note3) For lubrication when using the dedicated bellows, contact THK.
Note4) When using the dedicated bellows, the LM block and LM rail need to be machined so that the bellows can be mounted. Be sure to indicate that the dedicated bellows is required when ordering the LM Guide.

Model number coding

JHRW21 - 60/360

Model number of bellows for HRW21

Dimensions of the bellows (length when compressed / length when extended)

Note) The length of the bellows is calculated as follow.

$$L_{min} = \frac{S}{(A-1)}$$ S: Stroke length (mm)

$$L_{max} = L_{min} \cdot A$$ A: Extension rate

[Dedicated Bellows J for Model NSR-TBC]

The table below shows the dimensions of dedicated bellows J for model NSR-TBC. Specify the corresponding model number of the desired bellows from the table.

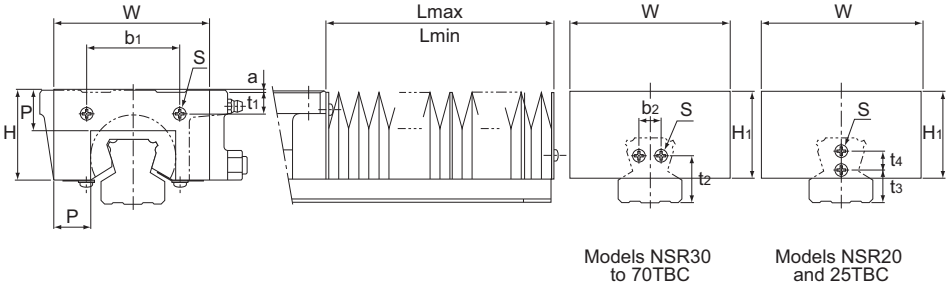

Unit: mm

Model No.		Main dimensions												A (Lmax/Lmin)	Supported model numbers	
		W	H	H_1	P	b_1	t_1	b_2	t_2	t_3	t_4	Mounting bolt S	a			
J	20	65	39	43	20	26	8	—	—	9	8	M4×8ℓ	8	7	NSR	20TBC
	25	75	43	45	20	40	11	—	—	12	8	M4×8ℓ	3	7		25TBC
	30	85	46	46	20	50	12	12	25	—	—	M4×8ℓ	—	7		30TBC
	40	115	59	59	25	60	13	16	32	—	—	M5×10ℓ	—	9		40TBC
	50	115	66	66	25	75	11	20	32	—	—	M5×10ℓ	—	9		50TBC
	70	124	84	78	25	96	16	36	40	—	—	M6×12ℓ	—	9		70TBC

Note1) When desiring to use the dedicated bellows other than in horizontal mount (i.e., vertical, wall and inverted mount), or when desiring a heat-resistant type of bellows, contact THK.
Note2) For lubrication when using the dedicated bellows, contact THK.
Note3) When using the dedicated bellows, the LM block and LM rail need to be machined so that the bellows can be mounted. Be sure to indicate that the dedicated bellows is required when ordering the LM Guide.

Model number coding

J50 - 60/540

Model number of bellows for NSR50TBC

Dimensions of the bellows (length when compressed / length when extended)

Note) The length of the bellows is calculated as follow.

$$L_{min} = \frac{S}{(A-1)}$$ S: Stroke length (mm)

$L_{max} = L_{min} \cdot A$ A: Extension rate

[Dedicated Bellows JSRG for Model SRG]

The table below shows the dimensions of dedicated bellows JSRG for model SRG. Specify the corresponding model number of the desired bellows from the table.

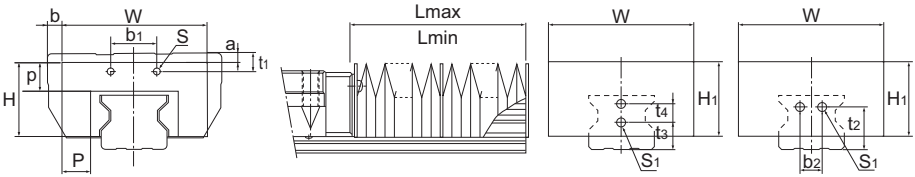

Models SRG15 and 30 Models SRG35 to 100

Unit: mm

Model No.		Main dimensions																			Supported model numbers	
		W	H	H_1	P	p	b_1	t_1 A/C	t_1 R/V	b_2	t_2	t_3	t_4	Screw size S	Mounting bolt S_1	a A/C	a R/V	b A/C	b R/V	A (Lmax/Lmin)		
JSRG	15	55	27	27	14.2	12.7	28	10.3	10.3	—	—	10.6	—	M2	M4	7	7	4	10.5	5	SRG	15
	20	66	32	32	17	15	38.5	9.6	9.6	—	—	7.4	8	M2	M3	6.6	6.6	1.5	11	6		20
	25	78	38	38	23	18	27.6	3.9	7.9	—	—	10	8	M2	M3×6ℓ	–6.5	–2.5	4	15	6		25
	30	84	42	42	22	19	37.4	10.4	13.4	—	—	11	10	M3	M4×8ℓ	–5	–2	3	12	7		30
	35	88	42	42	22	15	35	5	12	13	23	—	—	M3	M4×4ℓ	0	7	6	–9	5		35
	45	100	51	51	20	20	32	7	17	15	29	—	—	M3	M5×4ℓ	0	10	10	–7	7		45
	55	108	57	57	20	20	36	10	20	25	35	—	—	M3	M5×4ℓ	3	13	16	–4	7		55
	65	132	75.5	75.5	28.5	25	46	9	9	28	42	—	—	M4	M6×5ℓ	3	3	19	–3	9		65
	85	168	91	91	35.5	30	120	15	—	30	55	—	—	M6	M6×8ℓ	3	—	23.5	—	9		85
	100	198	100	100	43	33	152	13.3	—	36	60	—	—	M6	M6×8ℓ	4	—	26	—	9		100

Note1) When desiring to use the dedicated bellows other than in horizontal mount (i.e., vertical, wall and inverted mount), or when desiring a heat-resistant type of bellows, contact THK.
Note2) For lubrication when using the dedicated bellows, contact THK.
Note3) When using the dedicated bellows, the LM block and LM rail need to be machined so that the bellows can be mounted. Be sure to indicate that the dedicated bellows is required when ordering the LM Guide.
Note4) In case of oil lubrication, be sure to let THK know the mounting orientation and the exact position in each LM block where the piping joint should be attached.
For the mounting orientation and the lubrication, see A1-12 and A24-2, respectively.

Model number coding

JSRG35 - 60/420

Model number of bellows for SRG35

Dimensions of the bellows (length when compressed / length when extended)

Note) The length of the bellows is calculated as follow.

$$Lmin = \frac{S}{(A-1)}$$ S: Stroke length (mm)

$$Lmax = Lmin \cdot A$$ A: Extension rate

[Dedicated Bellows JSRW for Model SRW]

The table below shows the dimensions of dedicated bellows JSRW for model SRW. Specify the corresponding model number of the desired bellows from the table.

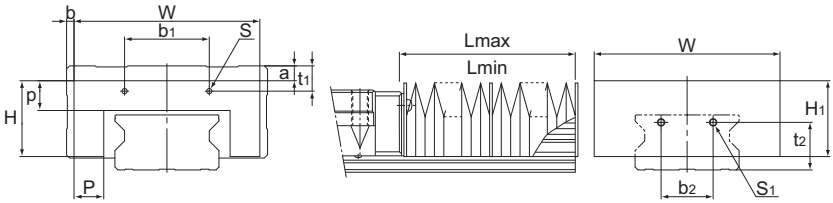

Unit: mm

Model No.		Main dimensions													A (Lmax / Lmin)	Supported model numbers	
		W	H	H_1	P	p	b_1	t_1	b_2	t_2	Screw size S	Mounting bolt S_1	a	b			
JSRW	70	125	51	51	20	20	57	17	35	32	M3	M5×4L	10	5	7	SRW	70
	85	138	57	57	20	20	68	20	42	36	M3	M5×4L	13	13.5	7		85
	100	169	75.5	75.5	28.5	25	83	19	50	46	M4	M6×5L	13	15.5	9		100
	130	220	96	96	36.5	35	165	35	60	55	M6	M6×8L	18	20	9		130
	150	260	114	114	49	47	200	43.3	70	60	M6	M6×8L	20	20	9		150

Note1) For lubrication when using the dedicated bellows, contact THK.
Note2) When desiring to use the dedicated bellows other than in horizontal mount (i.e., vertical, wall and inverted mount), or when desiring a heat-resistant type of bellows, contact THK.

Model number coding

JSRW70 - 60/420

Model number of bellows for SRW70

Dimensions of the bellows (length when compressed / length when extended)

Dedicated LM Cover

●For the supported models, see the table of options by model number on A1-458.
●For the dedicated LM cover dimensions, see A1-511.

Item name	Schematic diagram / mounting location	Purpose/location of use
Dedicated LM Cover	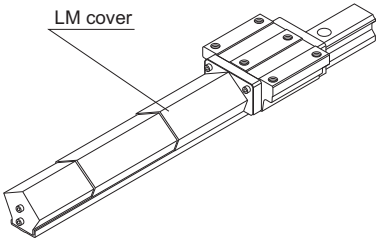	Used in locations exposed to dust or cutting chips Used in locations where high temperature foreign material such as flying spatter

LM Cover

[Dedicated LM Cover TPH for Model HSR]

The tables below show the dimensions of dedicated LM cover TPH for model HSR. Specify the corresponding model number of the desired bellows from the table.

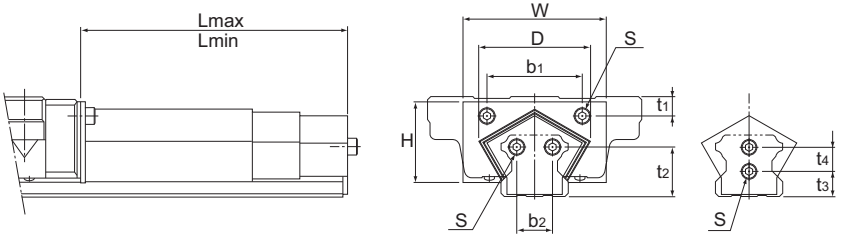

Models HSR25 and 30

Unit: mm

Model No.		Main dimensions										Supported model numbers	
		W	D (max)	H	b_1	t_1	b_2	t_2	t_3	t_4	Mounting bolt S		
TPH	25	55	42	28	30	7	—	—	10	8	M3×6ℓ	HSR	25
	30	60	48	34	40	8	—	—	11	10	M4×8ℓ		30
	35	70	55	38	40	9	14	23	—	—	M4×8ℓ		35
	45	90	75	48	58	10	20	29	—	—	M5×10ℓ		45
	55	100	88	55	66	11	26	35	—	—	M5×10ℓ		55

Unit: mm

Model No.		Stage	L		Stroke
			min	max	
TPH	25	3	200	530	330
		3	150	380	230
		3	100	230	130
	30	3	250	680	430
		3	200	530	330
		3	150	380	230
	35	3	300	830	530
		3	250	680	430
		3	200	530	330
		3	150	380	230

Unit: mm

Model No.		Stage	L		Stroke
			min	max	
TPH	45	3	350	980	630
		3	300	830	530
		3	250	680	430
		3	200	530	330
	55	4	400	1460	1060
		4	350	1330	980
		4	300	1060	760
		4	250	860	610

Note1) For lubrication when using the dedicated LM cover, contact THK.

Note2) When using the dedicated LM cover, the LM block and LM rail need to be machined so that the bellows can be mounted. Be sure to indicate that the dedicated bellows is required when ordering the LM Guide.

Model number coding

TPH55 - 400/1460

Model number of LM cover for HSR55

Lmin (cover length when compressed)

Lmax (cover length when extended)

Cap C

If any of the LM rail mounting holes of an LM Guide is filled with cutting chips or foreign material, they may enter the LM block structure. Entrance of such foreign material can be prevented by covering each LM rail mounting hole with the dedicated cap.
Since the dedicated cap C for LM rail mounting holes uses a special synthetic resin with high oil resistance and high wear resistance, it is highly durable.
To attach the dedicated cap to the mounting hole, place a flat metal piece like one shown in Fig.1 on the cap and gradually hammer in the cap until it is on the same level as the top face of the LM rail. When attaching the dedicated cap C for LM rail mounting holes, do not remove any of the LM blocks from the LM rail.

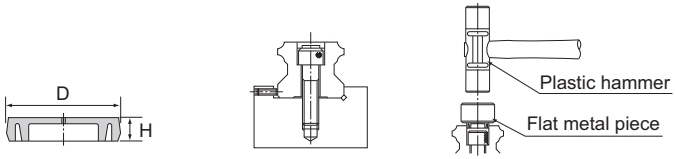

Fig.1 Cap C

Table1 List of Model Numbers Supported for the Dedicated Cap C for LM Rail Mounting Holes

Model No.	Bolt used	Main dimensions (mm)		Supported model number													
		D	H	SSR	SR	SVR SVS NR-X NRS-X	NR NRS	SHS HSR SCR CSR HCR	HMG	SHW HRW	SRG SRN	SRW	GSR	HR	SRS RSR	SRS-W RSR-W	NSR-TBC
C3	M3	6.3	1.2	—	15	—	—	12	—	—	—	—	—	1123 1530	12 15	9	—
C4	M4	7.9	1.0	15Y	—	—	—	15	15	14, 17, 21, 27	15	—	15	—	—	14	—
C5	M5	9.8	2.4	20	20	25	—	20	—	—	20	—	20	2042	20	—	20
C6	M6	11.6	2.7	25Y 30	25Y 30	30	—	25	25	35	25	—	25	—	25	—	25 30
C8	M8	14.5	3.7	35	35	35	—	30 35	35	50	30 35	—	30	2555 3065	—	—	40
C10	M10	18.0	3.7	—	45	—	—	—	—	60	—	70	35	3575	—	—	50
C12	M12	20.5	4.7	—	55	45	—	45	45	—	45	85	—	4085	—	—	70
C14	M14	23.5	5.7	—	—	55	—	55	—	—	55	100	—	—	—	—	—
C16	M16	26.5	5.7	—	70 85	65	—	65	65	—	65	130	—	50105	—	—	—
C20	M20	32.3	5.7	—	—	—	75	—	—	—	—	—	—	—	—	—	—
C22	M22	35.5	5.7	—	—	—	85	85	—	—	85	150	—	—	—	—	—
C24	M24	39.5	7.7	—	—	—	100	100	—	—	100	—	—	—	—	—	—

Note 1) The dedicated LM rail mounting hole cap is also available in metal (dedicated GC cap).
Note 2) If this product will be used in special environments such as in a vacuum or at very low or high temperatures, contact THK. When using the product in special environments such as those with coolants or corrosive solvents, contact THK.

Cap GC

●For notes regarding how to handle the GC cap, see A1-532.

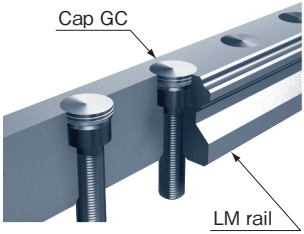

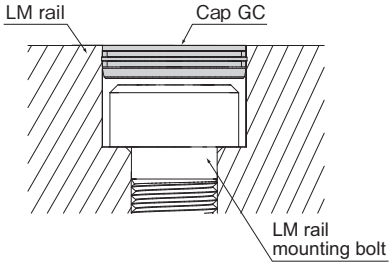

GC caps are metal caps designed to cover the mounting holes in LM rails (in compliance with RoHS directives).
In harsh environments, preventing any influx of coolant or foreign material from the top face of the LM rail, coupled with the use of seals, will dramatically improve the contamination protection performance for the LM guide.

[Features]

- **Eliminating gaps around the mounting holes (countersunk holes)**

The GC caps press into the mounting holes (countersunk holes) so that there are no gaps.

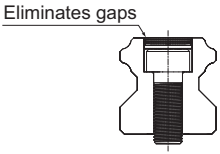

- **Provides long-term sealing due to its excellent abrasion resistance**

If a countermeasure such as a seal passes along the rail when there is foreign matter on the upper surface of the LM rail, it generates force pushing the GC cap in from above. In this situation, the cap does not get pushed inwards as it is easily strong enough to stay in place.

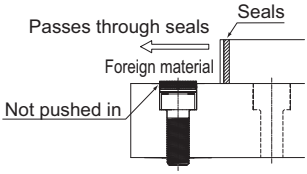

- **GC caps are highly effective in a range of different environments.**

Service environment			LM Guide		Example of Using the Spring Pad
			Standard C cap fitted	GC cap fitted	
Poor environment	Foreign matter concentration: Low	Metal powder, sputtering	○	◎	Welding machines, robots
		Wood shavings, coolant (Environments that strip away oils)	○	◎	Woodworking machinery, washers
		Metal powder + coolant	○	◎	Lathes, machining centers
	Foreign matter concentration: High	Metal powder, sputtering	△	◎	Welding machines, robots
		Wood shavings, coolant (Environments that strip away oils)	△	◎	Woodworking machinery, washers
		Metal powder + coolant	△	◎	Lathes, machining centers

◎:Particularly effective ○:Effective △:Not particularly effective

[Dimensions, applicable model number]

● Specification Table

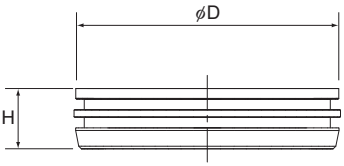

Unit: mm

Model No.	Outer diameter D	Thickness H
GC5	9.86	2.5
GC6	11.36	2.5
GC8	14.36	3.5
GC10	17.86	3.5
GC12	20.36	4.6
GC14	23.36	5.0
GC16	26.36	5.0
GC22	35.36	5.0
GC24	39.36	5.0

● Supported model numbers

GC caps are suitable for various different model numbers.

Model No.	LM rail mounting bolt	LM Guide model number											
		SSR	SR	SVR SVS NR-X NRS-X	NR NRS	SHS HSR HCR	SCR CSR	SHW HRW	SRG SRN	SRW	GSR	HR	NSR-TBC
GC5	M5	20	20	25	—	20	20	—	20	—	20	2042	20
GC6	M6	25Y 30	25Y 30	30	—	25	25	35	25	—	25	—	25 30
GC8	M8	35	35	35	—	30 35	30 35	50	30 35	—	30	2555 3065	40
GC10	M10	—	45	—	—	—	—	60	—	70	35	3575	50
GC12	M12	—	55	45	—	45	45	—	45	85	—	4085	70
GC14	M14	—	—	55	—	55	—	—	55	100	—	—	—
GC16	M16	—	70 85	65	—	65	65	—	65	130	—	50105	—
GC22	M22	—	—	—	85	85	—	—	85	150	—	—	—
GC24	M24	—	120	—	100	100	—	—	100	—	—	—	—

Model number coding

SVR45 LR 2 QZ TTHH C0 +1200L P -Ⅱ GC

- SVR45: Model No.
- LR: Type of LM block
- 2: No. of LM blocks used on the same rail
- QZ: With QZ Lubricator
- TTHH: Contamination protection accessory symbol
- C0: Radial clearance symbol
  - Normal (No symbol)
  - Light preload (C1)
  - Medium preload (C0)
- +1200L: LM rail length (in mm)
- P: Accuracy symbol
  - Normal grade (No Symbol)/High accuracy grade (H)
  - Precision grade (P)/Super precision grade (SP)
  - Ultra precision grade (UP)
- -Ⅱ: Symbol for No. of rails used on the same plane
- GC: With GC cap

Note1) LM guides with GC caps are special rails.
Note2) They cannot be mounted on stainless steel LM rails or LM rails that have undergone surface treatment.
Note3) If this product will be used in special environments, such as in a vacuum or at very low or high temperatures, contact THK.
Note4) GC caps are not sold individually. They are sold as a set with LM guides.
Note5) The openings of LM rail mounting holes are not chamfered. Take care not to injure your hands while working.
Note6) After fitting GC caps, the upper surface of the LM rail must be flattened and cleaned (wiped).
Note7) If you wish to fit GC caps for a single rail, use the sample model number configuration shown below.

(Example) SVR45LR2QZTTHHC0+1200LPGC — With GC cap

* Add the symbol (GC) to the end of the model number.

● **Mounting method**

The procedure for inserting a GC cap into a mounting hole consists of using a flat aligning fitting to gradually punch the cap into the hole until it is level with the upper surface of the LM rail, as shown in the figure. Fit GC caps without removing the LM rail from the LM block.

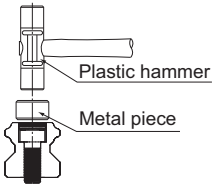

Plate Cover SV Steel Tape SP

●For the supported models, see the table of options by model number on A1-458.

Item name	Schematic diagram / mounting location	Purpose/location of use
Plate Cover SV	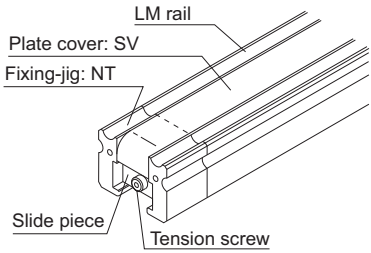	For the LM Guide, steel tapes are available as a means of contamination protection for machine tools. By covering the LM rail mounting holes with an ultra-thin stainless steel (SUS304) plate, the plate cover SV drastically increases sealability, thus to prevent the penetration of a coolant or cutting chips from the top face of the LM rail. For the mounting method, see **A1-517**. Note) When mounting the plate cover, the LM rail needs to be machined. Indicate that the plate cover is required when ordering the LM Guide.
Steel Tape SP	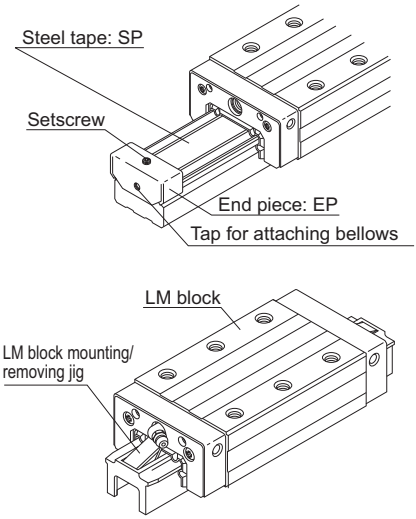	For the LM Guide, steel tapes are available as a means of contamination protection for machine tools. By covering the LM rail mounting holes with an ultra-thin stainless steel (SUS304) plate, the steel tape SP drastically increases sealability, thus to prevent the penetration of a coolant or cutting chips from the top face of the LM rail. (When mounting the steel tape, end piece EP can be used as a means to secure the cover.) For the mounting method, see **A1-518**. Note) When mounting the steel tape, the LM rail needs to be machined. Indicate that the steel tape is required when ordering the LM Guide.

[Mounting Procedure for Plate Cover SV]

(1) Attach slide pieces to the plate cover.
Place the slide pieces on the plate cover with their chamfered sides facing outward, hold the plate cover with the slide pieces and the securing plates, and then secure them with countersunk screws.

(2) Use an LM block mounting/removing jig to remove the LM block from the LM rail, and then mount the fixing-jigs onto the LM rail.

(3) Temporarily secure either slide piece.
Insert either slide piece into one of the fixing-jigs, then attach the slide piece to the LM rail's end face using the tension adjustment bolt and gently secure the bolt until the bolt head is inside the fixing-jig.

(4) Temporarily secure the other slide piece.
Temporarily secure the other slide piece in the same manner as above.

(5) Apply tension to the plate cover.
Apply tension to the plate cover by evenly securing the tension adjustment bolts on both ends of the LM rail. Make sure there is only a small difference between the H and H' dimensions in Fig.5. If the difference is too large, there may be no interference left on either end.

(6) Mount the LM block on the LM rail.
Identity the reference surface of the LM rail and the LM block, then insert the LM rail into the LM block using the LM block mounting / removing jig.

Note1) When removing or the mounting the LM block, use much care not to let the balls fall off.
Note2) The plate cover is an ultra-thin stainless steel (SUS304) plate. When handing it, use much care not to bend it.
Note3) The plate cover is available for model NR/NRS 75.

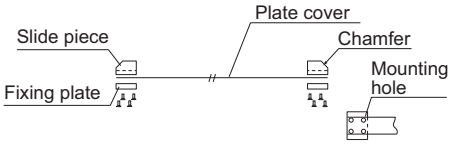

Fig.1

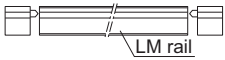

Fig.2

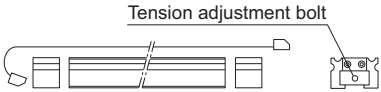

Fig.3

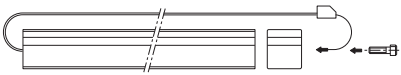

Fig.4

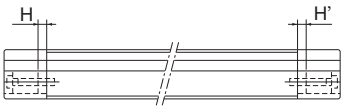

Fig.5

[Mounting Procedure for Steel Tape SP]

(1) Use an LM block mounting/removing jig to remove the LM block from the LM rail.
(2) Thoroughly degrease and clean the top face of the LM rail, to which the steel tape is to be adhered. For degreasing, use an adequately volatile detergent (e.g., industrial alcohol).
(3) Carefully adhere the steel tape from the end with care not to let it bend or sag, while gradually peeling the release paper from the steel tape.
(4) Have the steel tape settle on the rail by rubbing the tape. The adhesive strength increases with time. The adhering tape can be peeled off by pulling its end upward.
(5) Mount the LM block onto the LM rail using the LM block mounting/removing jig.
(6) Attach the end pieces on both ends of the LM rail and further secure the steel tape. When securing the end pieces, fasten only the setscrew on the top face of each end piece.
(The tap on the end face of the end piece is used for mounting bellows.)

Note1) The setscrew on the side face is used to lightly secure the bent steel tape. Be sure to stop fastening the screw as soon as it hits the end face, and do not force the screw further.
Note2) Since the steel tape is a thin steel plate, mishandling it may cause an accident such as cutting your finger. When handling it, take an effective safety measure such as wearing rubber gloves.

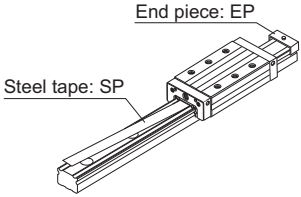

Fig.6

Fig.7

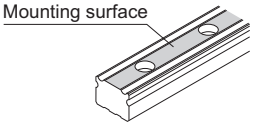

Fig.8

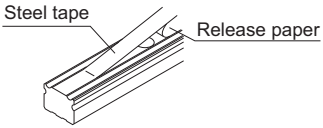

Fig.9

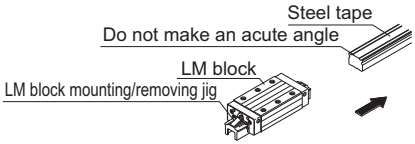

Fig.10

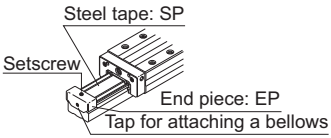

Fig.11

Lubrication Adapter

An oil lubricant-only lubrication adapter is available for models NR/NRS.
Even if the LM Guide is installed in an orientation where oil lubrication is difficult, such as wall mount and inversed mount, the adapter is capable of feeding a constant quantity of lubricant to the four raceways.

[Features]

The dedicated lubrication adapter for models NR-NRS is built in with a constant quantity distributor. Therefore, the adapter can accurately feed a constant quantity of lubricant to each raceway regardless of the mounting orientation.
The adapter is economical since it is capable of constantly feeding the optimum amount of lubricant and helping eliminate the supply of surplus lubricant.
To provide pipe arrangement, simply connect an intermittent lubrication pump widely used for ordinary machine tools to the greasing holes (M8) on the front and the side of the lubrication adapter.

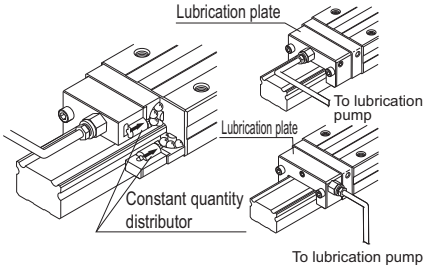

Fig.1 Structural Drawing

[Specifications]

Viscosity range of lubricant used	32 to 64 mm²/s recommended
Discharge	0.03×4, 0.06×4cc/1shot
Diameter of pipe connected	ϕ4, ϕ6
Material	Aluminum alloy

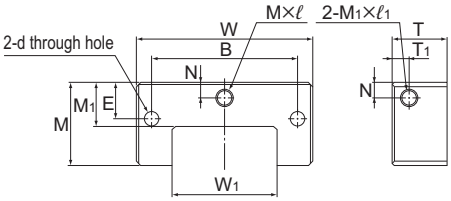

Fig.2

Table1 Dimension Table for Lubrication Adapter

Unit: mm

Model No.	Main dimensions												Quantity per shot (cc/shot)
	Width W	Height M	T	W_1	M_1	B	E	N	T_1	d	M×ℓ	M_1×ℓ_1	
A30N	56	29	25	29	14.5	46	14	5	5.3	3.5	M8×8	M8×8	0.03×4
A35N	66	33	25	35	17	54	16.5	6	5.3	4.5	M8×8	M8×8	
A45N	81	38	25	48	20	67	16.5	7	7.8	6.6	M8×8	M8×8	
A55N	94	45.5	25	56	22	76	20.5	7	7.8	6.6	M8×8	M8×8	0.06×4
A65N	119	55.5	25	67	26.3	92	25.5	11.5	7.8	9	M8×8	M8×8	
A85N	147	68.5	25	92	34	114	32	15.5	7.8	9	M8×8	M8×8	

Removing/mounting Jig

When assembling the guide, do not remove the LM block from the LM rail whenever possible. If it is inevitable to remove the LM block due to the plate cover type or the assembly procedure, be sure to use the removing/mounting jig.
Mounting the LM block without using the removing/mounting jig may cause rolling elements to fall from the LM block due to contamination by foreign material, damage to internal components or slight inclination. Mounting the LM block with some of the rolling elements missing may also cause damage to the LM block at an early stage.
When using the removing/mounting jig, do not incline the jig and match the ends of both LM rails.
The removing/mounting jig may not be available, depending on model. If this is the case, use a spare LM rail. Contact THK for details.
If any of the rolling elements falls from the LM block, contact THK instead of using the product.
Note that the removing/mounting jig is not included in the LM Guide package as standard. When desiring to use it, contact THK.

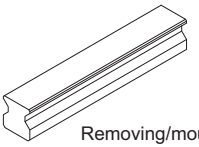

Removing/mounting Jig
(Material: ABS resin)

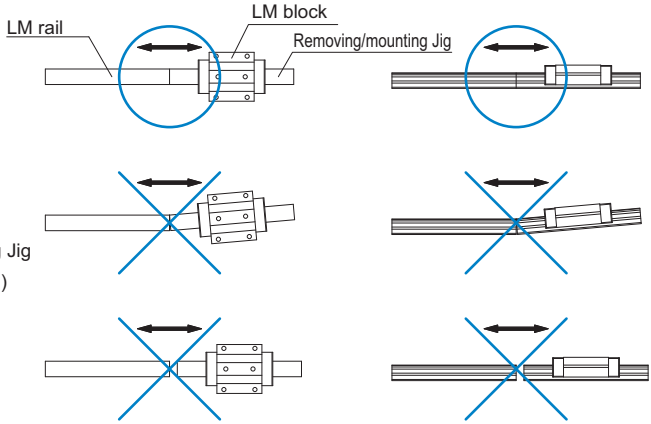

End Piece EP

For those models whose balls may fall if the LM rail is pulled out of the LM block, an end piece is attached to the product to prevent the LM block from being removed from the LM rail.
For models that can use the end piece, see the table below.
If removing the end piece when using the LM Guide, be sure that the LM block will not overshoot.
The end piece can also be used as a fixing jig for a steel tape, and is available also for the LM rail of models SSR, SR and HSR.

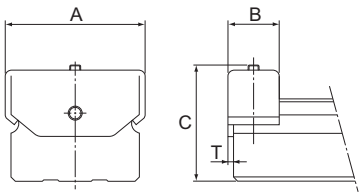

Fig.1 End Piece EP for Models NR/NRS

Table1 Dimension Table for End Piece EP for Models NR/NRS
Unit: mm

Model No.	A	B	C	T
NR/NRS 75	81.7	28	56	3.2
NR/NRS 85	91.4	22	68	3.2
NR/NRS 100	106.4	25	73	3.2

Model Number Coding

Model number configurations differ depending on the model features. Refer to the corresponding sample model number configuration.

[LM Guide]

- **Models SHS, SSR, SVR/SVS, SHW, HSR, SR, NR/NRS-X, NR/NRS, HRW, JR, NSR-TBC, HSR-M1, SR-M1 and HSR-M2**

SHS25 LC 2 QZ KKHH C0 +1200L P Z T -Ⅱ

- SHS25: Model No.
- LC: Type of LM block
- 2: No. of LM blocks used on the same rail
- QZ: With QZ Lubricator
- KKHH: Contamination protection accessory symbol (*1)
- C0: Radial clearance symbol (*2)
  - Normal (No symbol)
  - Light preload (C1)
  - Medium preload (C0)
- +1200L: LM rail length (in mm)
- P: Accuracy symbol (*3)
  - Normal grade (No Symbol)/High accuracy grade (H)/Precision grade (P)
  - Super precision grade (SP)/Ultra precision grade (UP)
- Z: With steel tape
- T: Symbol for LM rail jointed use
- -Ⅱ: Symbol for No. of rails used on the same plane (*4)

(*1) See contamination protection accessory on A1-494. (*2) See A1-70. (*3) See A1-75. (*4) See A1-13.

Note) This model number indicates that a single-rail unit constitutes one set. (i.e., required number of sets when 2 rails are used in parallel is 2 at a minimum.)
Those models equipped with QZ Lubricator cannot have a grease nipple. When desiring a grease nipple for a model attached with QZ, contact THK.

[Caged Ball LM Guide]

- **Model EPF**

EPF7M* 16 +55L P M

- EPF7M*: Model No.
- 16: Guaranteed stroke (in mm)
- +55L: LM rail length (in mm)
- P: Accuracy symbol (*1)
- M: Rail material: Stainless steel (standard)

(*1) See A1-85.

Note) ∗: Stainless steel is the standard material used for LM blocks.
This model number denotes one set consists of an LM block and LM rail.

[Caged Roller LM Guide]

● Models SRG, SRN and SRW

SRG45 LC 2 QZ TTHH C0 +1200L P T -Ⅱ

- SRG45: Model number
- LC: Type of LM block
- 2: No. of LM blocks used on the same rail
- QZ: With QZ Lubricator
- TTHH: Contamination protection accessory symbol (*1)
- C0: Radial clearance symbol (*2)
  - Normal (No symbol)
  - Light preload (C1)
  - Medium preload (C0)
- +1200L: LM rail length (in mm)
- P: Accuracy symbol (*3)
  - Precision grade (P)/Super precision grade (SP)
  - Ultra precision grade (UP)
- T: Symbol for LM rail jointed use
- -Ⅱ: Symbol for No. of rails used on the same plane (*4)

(*1) See contamination protection accessory on A1-494. (*2) See A1-70. (*3) See A1-75. (*4) See A1-13.

Note) This model number indicates that a single-rail unit constitutes one set. (i.e., required number of sets when 2 rails are used in parallel is 2 at a minimum.)
Those models equipped with QZ Lubricator cannot have a grease nipple. When desiring a grease nipple for a model attached with QZ, contact THK.

[Miniature Type LM Guide]

● Models SRS, RSR and RSR-M1

2 SRS20M QZ UU C1 +220L P M -Ⅱ

- 2: No. of LM blocks used on the same rail
- SRS20M: Model No.
- QZ: With QZ Lubricator
- UU: Contamination protection accessory symbol (*1)
- C1: Radial clearance symbol (*2)
  - Normal (No symbol)/Light preload (C1)
- +220L: LM rail length (in mm)
- P: Accuracy symbol (*3)
  - Normal grade (No Symbol)/High accuracy grade (H)/Precision grade (P)
- M: Stainless steel LM rail
- -Ⅱ: Symbol for No. of rails used on the same plane (*4)

(*1) See contamination protection accessory on A1-494. (*2) See A1-70. (*3) See A1-75. (*4) See A1-13.

Note) This model number indicates that a single-rail unit constitutes one set. (i.e., required number of sets when 2 rails are used in parallel is 2 at a minimum.)
Those models equipped with QZ Lubricator cannot have a grease nipple. When desiring a grease nipple for a model attached with QZ, contact THK.

[Cross LM Guide]

● Models SCR, CSR and MX

4 SCR25 QZ KKHH C0 +1200/1000L P

- 4: Total No. of LM blocks
- SCR25: Model No.
- QZ: With QZ Lubricator
- KKHH: Contamination protection accessory symbol (*1)
- C0: Radial clearance symbol (*2)
  - Normal (No symbol)/Light preload (C1)
  - Medium preload (C0)
- +1200: LM rail length on the X axis (in mm)
- 1000L: LM rail length on the Y axis (in mm)
- P: Accuracy symbol (*3)
  - Precision grade (P)/Super precision grade (SP)
  - Ultra precision grade (UP)

(*1) See contamination protection accessory on A1-494. (*2) See A1-70. (*3) See A1-75.

Note) Those models equipped with QZ Lubricator cannot have a grease nipple. When desiring a grease nipple for a model attached with QZ, contact THK.

[Separate LM Guides]

● Model HR

2 HR2555 UU M +1000L P T M

- 2: No. of LM blocks used on the same rail
- HR2555: Model No.
- UU: Contamination protection accessory symbol (*1)
- M: Stainless steel LM block
- +1000L: LM rail length (in mm)
- P: Accuracy symbol (*2) Normal grade (No Symbol)/High accuracy grade (H)/Precision grade (P) Super precision grade (SP)/Ultra precision grade (UP)
- T: Symbol for LM rail jointed use
- M: Stainless steel LM rail

(*1) See contamination protection accessory on A1-494. (*2) See A1-75.

Note) One set of model HR means a combination of two LM rails and an LM blocks used on the same plane.

● Model GSR

- LM block

GSR25 T UU

- GSR25: Model number
- T: Type of LM block
- UU: Contamination protection accessory symbol (*1)

- LM rail

GSR25 -1060L H K

- GSR25: Model number
- -1060L: LM rail length (in mm)
- H: Symbol for tapped-hole LM rail type
- K: Accuracy symbol (*2) Normal grade (No Symbol) High accuracy grade (H) Precision grade (P)

(*1) See contamination protection accessory on A1-494. (*2) See A1-75.

- Combination of LM rail and LM block

GSR25 T 2 UU +1060L H T K

- GSR25: Model No.
- T: Type of LM block
- 2: No. of LM blocks used on the same rail
- UU: Contamination protection accessory symbol (*1)
- +1060L: LM rail length (in mm)
- H: Accuracy symbol (*2) Normal grade (No Symbol)/High accuracy grade (H)/Precision grade (P)
- T: Symbol for LM rail jointed use
- K: Symbol for tapped-hole LM rail type

(*1) See contamination protection accessory on A1-494. (*2) See A1-75.

Note) One set of model GSR: This model number indicates that a single-rail unit constitutes one set.

[R Guide]

● Model HCR

HCR25A 2 UU C1 +60 / 1000R H 6 T

- HCR25A: Model No.
- 2: No. of LM blocks used on the same rail
- UU: Contamination protection accessory symbol (*1)
- C1: Radial clearance symbol (*2) Normal (No symbol)/Light preload (C1)
- +60: R-Guide center angle
- 1000R: LM rail radius (in mm)
- H: Accuracy symbol (*3) Normal grade (No Symbol)/High accuracy grade (H)
- 6: Number of LM rail joints used on one axis (*4)
- T: Symbol for LM rail jointed use (*5)

(*1) See A1-494 (contamination protection accessories). (*2) See A1-70. (*3) See A1-75.
(*4) Number of LM rails used on one arc. Contact THK for details.
(*5) When using joined LM rails, the dust prevention seal must be a low-resistance seal (dust prevention code: LL).

[Straight-Curved Guide]

● Model HMG

When 2 rails are used

HMG15A 2 UU C1 +1000L T + 60/150R 6T + 60/300R 6T -Ⅱ

- Model No.
- No. of LM blocks used on the same rail
- Contamination protection accessory symbol (*1)
- Radial clearance symbol: Normal (No symbol)/Light preload (C1)
- Overall linear LM rail length per rail
- Symbol for linear LM rail joint
- Center angle of one inner curved rail
- Radius of inner curved rail
- No. of inner curved LM rails jointed
- Center angle of one outer curved rail
- Radius of outer curved rail
- No. of outer curved LM rails jointed
- Symbol for No. of rails used on the same plane (*2)

(*1) See contamination protection accessory on A1-494. (*2) See A1-13.

Note) This model number denotes one set consists of an LM block and LM rail. (i.e. If you are using 2 shafts, the required number of sets is 2.)
The standard Model HMG does not have a seal.To attach a seal, make sure to specify a straight-curved seal (code: UU).

[LM Guide for Medium-to-Low Vacuum]

● Model HSR-M1VV

HSR15M1R 1 VV C1 +400L P -Ⅱ

- Model No.
- No. of LM blocks used on one rail
- Labyrinth seal symbol (*2)
- Radial clearance symbol (*1)
- LM rail length (in mm)
- Accuracy symbol (*3)
- Symbol for No. of rails used on the same plane (*4)

(*1) See A1-70. (*2) See A1-377. (*3) See A1-75. (*4) See A1-13.

Note1) The radial clearance, maximum LM rail length and accuracy class are equal to that of model HSR.
Note2) With this model, a single-rail unit constitutes one set (i.e., the required number of sets when 2 rails are used in parallel is 2).

[Oil-Free LM Guide for Special Environments]

● Model SR-MS

SR15MSV 1 CS +340L P -Ⅱ

- Model No.
- No. of LM blocks used on one rail
- Radial clearance symbol (*1)
- LM rail length (in mm)
- Accuracy symbol (*2)
- Symbol for No. of rails used on the same plane (*3)

(*1) See A1-70. (*2) See A1-75. (*3) See A1-13.

Note) With this model, a single-rail unit constitutes one set (i.e., the required number of sets when 2 rails are used in parallel is 2).

Notes on Ordering

[Order units]

Note that the number of items that constitute one set differs depending on the type of LM guide. Check the sample model number configurations and the accompanying notes.

- **Sample LM guide orders**

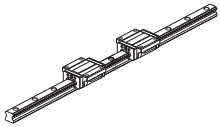

SHS25C2SSC1+640L 1 set

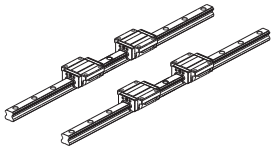

SHS25C2SSC1+640L-Ⅱ2 sets

- **Sample model HR orders**

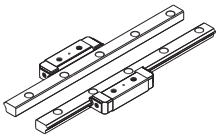

HR2555UU+600L 1 set

- **Sample model GSR and GSR-R orders**

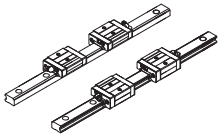

GSR25T2UU+1060L 2 sets

- **Sample cross LM guide orders (SCR, CSR and MX)**

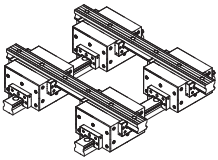

4SCR25UU+1200/1000LP 1 set

- **Sample model HMG orders**

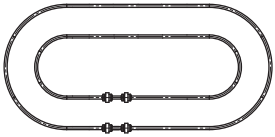

HMG15A 2 UU C1 +1000L T + 60/150R 6T + 60/300R 6T - Ⅱ 2 sets

Note) When ordering model HMG, attach a reference diagram clearly showing the positioning of the LM block and LM rail.

[Mounted orientation and lubrication method]
When placing an order, be sure to let THK know the mounting orientation and the exact position in each LM block where the grease nipple or the piping joint should be attached.
For the mounting orientation and the lubrication, see A1-12 and A24-2, respectively.

[Supported options]
The supported options differ depending on the model number. Check the available options when ordering.
See A1-458.

[Maximum manufactured lengths for LM rails]
Where a high degree of precision is required, limits apply to the maximum manufactured lengths for LM rails. In such situations, contact THK.

Precautions on Using the LM Guide

[Handling]

(1) Please use at least two people to move any product weighing 20 kg or more, or use a dolly or another conveyance. Doing so may cause injury or damage.
(2) Do not disassemble the parts. This will result in loss of functionality.
(3) Tilting an LM block or LM rail may cause them to fall by their own weight.
(4) Take care not to drop or strike the LM Guide. Doing so may cause injury or damage. Giving an impact to it could also cause damage to its function even if the product looks intact.
(5) Do not remove the LM block from the LM rail during setup.
(6) Do not insert hands or fingers into the mounting holes on the LM rail, as they could get caught between the rail and the LM block, resulting in injury.
(7) To ensure personal safety, wear gloves and protective footwear when handling this product.

[Precautions on Use]

(1) Prevent foreign material, such as cutting chips or coolant, from entering the product. Failure to do so may cause damage.
(2) If the product is used in an environment where cutting chips, coolant, corrosive solvents, water, etc., may enter the product, use bellows, covers, etc., to prevent them from entering the product.
(3) Do not use this product if the external temperature exceeds 80℃. Unless the unit is specially designed to be heat-resistant, exposure to such temperatures may deform or damage plastic and rubber parts.
(4) If foreign material such as cutting chips adheres to the product, replenish the lubricant after cleaning the product.
(5) Micro-strokes tend to obstruct oil film to form on the raceway in contact with the rolling element, and may lead to fretting corrosion. Take consideration using grease offering excellent fretting prevention. It is also recommended that a stroke movement corresponding to the length of the LM block be made on a regular basis to make sure oil film is formed between the raceway and rolling element.
(6) Do not use undue force when fitting parts (pin, key, etc.) to the product. This may generate permanent deformation on the raceway, leading to loss of functionality.
(7) If, for operational reasons, it becomes absolutely necessary to remove the LM block from the LM rail and reattach it, a special mounting jig must be used for this purpose. (The mounting jig is not included with standard versions of the product. To obtain one, please contact THK.)
(8) Position the mounting jig so that one end abuts the end of the LM rail. When the rail and the jig are exactly aligned, the LM block can be loaded onto the rail.
(9) Take care to keep the LM block straight. Loading the block at an angle can introduce foreign matter, damage internal components, or cause balls to fall out.
(10) The LM block must contain all its internal rolling elements (balls) when mounted on the LM rail. Using a block with any balls removed may result in premature damage.
(11) Please contact THK if any balls fall out of the LM block; do not use the block if any balls are missing.

(12) If the end plate is damaged due to an accident, etc., balls may fall out or the LM block may become detached from the LM rail and drop. If the LM Guide will be used hanging upside down, take preventive measures such as adding a safety mechanism to prevent falls.
(13) Insufficient rigidity or accuracy of mounting members causes the bearing load to concentrate on one point and the bearing performance will drop significantly. Accordingly, give sufficient consideration to the rigidity/accuracy of the housing and base and strength of the fixing bolts.
(14) When removing the LM block from the LM rail and then replacing the block, an LM block mounting/removing jig that facilitates such installation is available. Contact THK for details.

[Lubrication]

(1) Thoroughly remove anti-rust oil and feed lubricant before using the product.
(2) Do not mix different lubricants. Mixing greases using the same type of thickening agent may still cause adverse interaction between the two greases if they use different additives, etc.
(3) When using the product in locations exposed to constant vibrations or in special environments such as clean rooms, vacuum and low/high temperature, use the grease appropriate for the specification/environment.
(4) When lubricating the product having no grease nipple or oil hole, apply grease directly on the raceway and stroke the product several times to let the grease spread inside.
(5) The consistency of grease changes according to the temperature. Take note that the slide resistance of the LM Guide also changes as the consistency of grease changes.
(6) After lubrication, the slide resistance of the LM Guide may increase due to the agitation resistance of grease. Be sure to perform a break-in to let the grease spread fully, before operating the machine.
(7) Excess grease may scatter immediately after lubrication, so wipe off scattered grease as necessary.
(8) The properties of grease deteriorate and its lubrication performance drops over time, so grease must be checked and added properly according to the use frequency of the machine.
(9) Although the lubrication interval may vary according to use conditions and the service environment, lubrication should be performed approximately every 100 km in travel distance (three to six months). Set the final lubrication interval/amount based on the actual machine.
(10) If the mounting orientation is other than horizontal use, the lubricant may not reach the raceway completely. For the mounting orientation and the lubrication, see B1-28 and B24-2, respectively.
(11) When adopting oil lubrication, the lubricant may not be distributed throughout the LM block depending on the mounting orientation of the block. Contact THK in advance for details.

[Storage]

When storing the LM Guide, enclose it in a package designated by THK and store it in a room in a horizontal orientation while avoiding high temperature, low temperature and high humidity.
After the product has been in storage for an extended period of time, lubricant inside may have deteriorated, so add new lubricant before use.

[Disposal]

Dispose of the product properly as industrial waste.

Precautions on Handling the LM Guide for Special Environment

LM Guide for Medium-to-Low Vacuum

[Handling]

(1) This product has been thoroughly cleaned and degreased and then sealed in moisture-proof packaging. If possible, open the package immediately prior to using the product.
(2) Once the packaging has been opened, store the product inside a clean, dry receptacle accompanied by silica gel or another drying agent. Do not use anti-rust oil or corrosion- or tarnish-preventive paper or fluid with this product.
(3) Wear protective rubber or vinyl gloves while handling this product and make sure the surrounding environment is relatively clean.

Oil-Free LM Guide

[Handling]

(1) The Oil-Free LM Guide is suitable for use at high temperatures, under atmospheric pressure or in a high-vacuum environment of 10^{-6} Pa, and is designed for ultra-low dust emission. It is not intended for use in locations requiring rigidity. Because a preload would affect the strength of its Dry Lubrication S-Compound Film, it does not support preloads.
(2) The product can be used in temperatures ranging from −20 to 150℃.
(3) To ensure proper function of the Dry Lubrication S-Compound Film, use this product in an environment free from condensation, at a humidity level of 40% or less.
(4) This product is not intended for joint use.
(5) Great care must be taken in the installation of the Oil-Free LM Guide, which requires greater precision compared to standard LM Guides.
(6) If the LM block is removed from the LM rail, balls may fall out, and the Dry Lubrication S-Compound Film can be damaged when the block is remounted. If it becomes necessary to remove the LM block from the LM rail, please contact THK.
(7) This product should be stored in a horizontal position, in its original wrapping and package, in a controlled, stable environment free from abnormal high or low temperatures or high humidity. THK recommends storing it at room temperature (25±5℃), with a humidity level of 40% RH or lower and an air-purity level of 10,000 or lower.
(8) This product has been thoroughly cleaned and degreased and then sealed in moisture-proof packaging. If possible, open the package immediately prior to using the product.
(9) Once the packaging has been opened, store the product inside a clean, dry receptacle accompanied by silica gel or another drying agent. Do not use anti-rust oil or corrosion- or tarnish-preventive paper or fluid with this product.
(10) Wear protective rubber or vinyl gloves while handling this product and make sure the surrounding environment is relatively clean.

Precautions on Using Options for the LM Guide

QZ Lubricator for the LM Guide

For details regarding the QZ, see A1-487.

[Precaution on Selection]
Secure a stroke longer than the overall LM block with QZ Lubricator attached.

[Handling]
Take care not to drop or strike this product. This could cause injury or product damage.
Do not block the vent hole with grease or the like.
The QZ device supplies oil only to the raceway, so use it in combination with regular greasing/lubrication. If the product is used in an environment exposed to coolant, cutting chips or other foreign material, oil on the raceway is lost easily. Accordingly, be sure to also use covers, bellows, etc.

[Service environment]
Be sure the service temperature of this product is between –10 to 50℃, and do not clean the product by immersing it in an organic solvent or white kerosene, or leave it unpacked.

Laminated Contact Scraper LaCS, Side Scraper for LM Guides

For details regarding the LaCS, see A1-464. For details regarding the side scraper, see A1-466.

[Handling]
The lubricant impregnated into the scraper is used to increase its sliding capability. For lubrication of the LM Guide, attach QZ Lubricator, or the grease nipple on the side face of the end plate of the LM block, before providing a lubricant.
When using the product, be sure to attach the rail cap C or the plate cover.

[Service environment]
Be sure the service temperature of this product is between -20 to +80℃, and do not clean the product by immersing it in an organic solvent or white kerosene, or leave it unpacked.

[Notes on the Product Functions]
It is specifically designed to provide dust prevention capability to remove foreign material and liquid. To seal oil, an end seal is required.

Light Contact Seal LiCS for LM Guides

For details regarding the LiCS, see A1-469.

[Handling]
The lubricant impregnated into LiCS is used to increase its sliding capability. For lubrication of the LM Guide, attach the grease nipple on the end plate of the LM block before providing a lubricant.

[Service environment]
Be sure the service temperature of this product is between -20 to +80℃, and do not clean the product by immersing it in an organic solvent or white kerosene, or leave it unpacked.
It contacts only with the LM rail raceway. Do not use it in harsh environments.

Cap GC

For details regarding the GC cap, see A1-513.

[Handling]
If GC caps are specified for the product, the edges of the LM rail mounting hole openings will be sharp. Take great care not to injure your fingers or hands while working.
When fitting GC caps, use a flat aligning tool to gradually punch the cap into the hole until it is level with the upper surface of the LM rail. Then run an oil stone over the rail until the upper surface of the rail and the GC caps are completely flat.

LM Guide®

THK General Catalog

LM Guide

THK General Catalog

B Support Book

Features and Types B1-8
Features of the LM Guide B1-8
- Large Permissible Load and High Rigidity .. B1-9
- High Precision of Motion B1-11
- Accuracy Averaging Effect by Absorbing Mounting Surface Error .. B1-14
- Easy Maintenance B1-16
- Substantial Energy Savings B1-17
- Low Total Cost B1-18
- Ideal Four Raceway, Circular-Arc Groove, Two-Point Contact Structure .. B1-19
- Superb Error-Absorbing Capability with the DF Design .. B1-23

Classification Table of the LM Guides ... B1-24

Point of Selection B1-26
Flowchart for Selecting an LM Guide B1-26
Setting Conditions B1-28
- Conditions of the LM Guide B1-28

Selecting a Type B1-44
- Types of LM Guides B1-44

Calculating the Applied Load B1-56
- Calculating an Applied Load B1-56
- Example of calculation B1-59

Calculating the Equivalent Load B1-66
- Rated Load of an LM Guide in Each Direction .. B1-66

Calculating the Static Safety Factor B1-68
Calculating the Average Load B1-69
- Example of Calculating the Average Load (1)
  - with Horizontal Mount and Acceleration/Deceleration Considered - .. B1-71
- Example of Calculating the Average Load (2)
  - When the Rails are Movable B1-72

Calculating the Nominal Life B1-73
- Nominal Life Equation for an LM Guide Using Balls .. B1-73
- Nominal Life Equation for the Oil-Free LM Guide .. B1-73
- Nominal Life Equation for an LM Guide Using Rollers .. B1-74
- Example of Calculating the Nominal Life (1)
  - with Horizontal Mount and High-speed Acceleration .. B1-77
- Example of Calculating the Nominal Life (2)
  - with Vertical Mount B1-82

Predicting the Rigidity B1-85
- Selecting a Radial Clearance (Preload) ... B1-85
- Service Life with a Preload Considered ... B1-86
- Rigidity B1-86

Determining the Accuracy B1-87
- Accuracy Standards B1-87
- Guidelines for Accuracy Grades by Machine Type .. B1-88

Mounting Procedure and Maintenance .. B1-89
Mounting the LM Guide B1-89
- Marking on the Master LM Guide and Combined Use .. B1-89
- Mounting Procedure B1-91
- Methods for Measuring Accuracy after Installation .. B1-101
- Recommended Tightening Torque for LM Rails .. B1-101

Options B1-103
Seal and Metal scraper B1-104
Laminated Contact Scraper LaCS B1-106
Side Scraper B1-108
Protector B1-109
Light-Resistance Contact Seal LiCS B1-110
Dedicated bellows B1-111
Dedicated LM Cover B1-111
Cap C B1-112
Cap GC B1-113
Plate Cover SV Steel Tape SP B1-115
QZ Lubricator B1-118
Lubrication Adapter B1-121
Removing/mounting Jig B1-122
End Piece EP B1-123

Model No. B1-124
- Model Number Coding B1-124
- Notes on Ordering B1-128

Precautions on Use B1-130
Precautions on Using the LM Guide B1-130
Precautions on Handling the LM Guide for Special Environment .. B1-132
- LM Guide for Medium-to-Low Vacuum B1-132
- Oil-Free LM Guide B1-132

Precautions on Using Options for the LM Guide .. B1-133
- QZ Lubricator for the LM Guide B1-133
- Laminated Contact Scraper LaCS, Side Scraper for LM Guides .. B1-133
- Light Contact Seal LiCS for LM Guides ... B1-134
- Cap GC B1-134

A Product Descriptions (Separate)

Classification Table of the LM Guides ... A1-8

Point of Selection ... A1-10
Flowchart for Selecting an LM Guide ... A1-10
Setting Conditions ... A1-12
- Conditions of the LM Guide ... A1-12

Selecting a Type ... A1-28
- Types of LM Guides ... A1-28

Calculating the Applied Load ... A1-40
- Calculating an Applied Load ... A1-40

Calculating the Equivalent Load ... A1-57
- Rated Load of an LM Guide in Each Direction ... A1-57

Calculating the Static Safety Factor ... A1-61
Calculating the Average Load ... A1-62
Calculating the Nominal Life ... A1-64
- Nominal Life Equation for an LM Guide Using Balls ... A1-64
- Nominal Life Equation for the Oil-Free LM Guide ... A1-64
- Nominal Life Equation for an LM Guide Using Rollers ... A1-65

Predicting the Rigidity ... A1-68
- Selecting a Radial Clearance (Preload) ... A1-68
- Service Life with a Preload Considered ... A1-69
- Rigidity ... A1-69
- Radial Clearance Standard for Each Model ... A1-70

Determining the Accuracy ... A1-73
- Accuracy Standards ... A1-73
- Guidelines for Accuracy Grades by Machine Type ... A1-74
- Accuracy Standard for Each Model ... A1-75

Features and Dimensions of Each Model ... A1-87
Structure and Features of the Caged Ball LM Guide ... A1-88
- Advantages of the Ball Cage Technology ... A1-89

Caged Ball LM Guide Global Standard Size Model SHS ... A1-92
- Structure and Features ... A1-93
- Types and Features ... A1-94

Dimensional Drawing, Dimensional Table
Models SHS-C and SHS-LC ... A1-96
Models SHS-V and SHS-LV ... A1-98
Models SHS-R and SHS-LR ... A1-100
- Standard Length and Maximum Length of the LM Rail ... A1-102
- Tapped-hole LM Rail Type of Model SHS ... A1-103

Caged Ball LM Guide Radial Type Model SSR ... A1-104
- Structure and Features ... A1-105
- Types and Features ... A1-106

Dimensional Drawing, Dimensional Table
Models SSR-XW and SSR-XWM ... A1-108
Models SSR-XV and SSR-XVM ... A1-110
Model SSR-XTB ... A1-112
- Standard Length and Maximum Length of the LM Rail ... A1-114
- Tapped-hole LM Rail Type of Model SSR ... A1-115

Caged Ball LM Guide Ultra-heavy Load Type for Machine Tools Model SVR/SVS ... A1-116
- Structure and Features ... A1-117
- Types and Features ... A1-119

Dimensional Drawing, Dimensional Table
Models SVR-R and SVR-LR ... A1-122
Models SVS-R and SVS-LR ... A1-124
Models SVR-C and SVR-LC ... A1-126
Models SVS-C and SVS-LC ... A1-128
Models SVR-RH, SVR-LRH, SVS-RH and SVS-LRH ... A1-130
Models SVR-CH, SVR-LCH, SVS-CH and SVS-LCH ... A1-132
- Standard Length and Maximum Length of the LM Rail ... A1-134

Caged Ball LM Guide Wide Rail Model SHW ... A1-136
- Structure and Features ... A1-137
- Types and Features ... A1-138

Dimensional Drawing, Dimensional Table
Model SHW-CA ... A1-140
Models SHW-CR and SHW-HR ... A1-142
- Standard Length and Maximum Length of the LM Rail ... A1-144
- Greasing Hole ... A1-145

Caged Ball LM Guide Miniature Type Model SRS ... A1-146
- Structure and Features ... A1-147
- Types and Features ... A1-148
- Flatness of the LM Rail and the LM Block Mounting Surface ... A1-151

Dimensional Drawing, Dimensional Table
Models SRS-S, SRS-M and SRS-N ... A1-152
Models SRS-WS, SRS-WM and SRS-WN ... A1-156
- Standard Length and Maximum Length of the LM Rail ... A1-160

Caged Ball LM Guide Cross LM Guide Model SCR ... A1-162
- Structure and Features ... A1-163
- Types and Features ... A1-164

Dimensional Drawing, Dimensional Table
Model SCR ... A1-166
- Standard Length and Maximum Length of the LM Rail ... A1-168
- Tapped-hole LM Rail Type of Model SCR ... A1-169

Caged Ball LM Guide Finite stroke Model EPF ... A1-170
- Structure and Features ... A1-171

- Types and Features A1-172
- Accuracy of the Mounting Surface A1-173

Dimensional Drawing, Dimensional Table
Model EPF A1-174
- Standard Length of the LM Rail A1-176

LM Guide Global Standard Size Model HSR A1-178
- Structure and Features A1-179
- Types A1-180

Dimensional Drawing, Dimensional Table
Models HSR-A and HSR-AM, Models HSR-LA and HSR-LAM .. A1-184
Models HSR-B, HSR-BM, HSR-LB and HSR-LBM .. A1-186
Model HSR-RM A1-188
Models HSR-R, HSR-RM, HSR-LR and HSR-LRM .. A1-190
Models HSR-YR and HSR-YRM A1-192
Models HSR-CA, HSR-CAM, HSR-HA and HSR-HAM... A1-194
Models HSR-CB, HSR-CBM, HSR-HB and HSR-HBM .. A1-196
Models HSR-HA, HSR-HB and HSR-HR .. A1-198
- Standard Length and Maximum Length of the LM Rail .. A1-200
- Tapped-hole LM Rail Type of Model HSR .. A1-201
- Prevention of LM block from falling off of LM rail ... A1-202
- Greasing Hole A1-202

LM Guide Radial Type Model SR A1-204
- Structure and Features A1-205
- Types and Features A1-206
- Characteristics of Model SR A1-208

Dimensional Drawing, Dimensional Table
Models SR-W, SR-WM, SR-V and SR-VM .. A1-210
Models SR-TB, SR-TBM, SR-SB and SR-SBM .. A1-212
- Standard Length and Maximum Length of the LM Rail .. A1-214
- Tapped-hole LM Rail Type of Model SR... A1-215

LM Guide Ultra-heavy Load Type for Machine Tools Model NR/NRS-X .. A1-216
- Structure and Features A1-217
- Types and Features A1-218

Dimensional Drawing, Dimensional Table
Models NR-RX, NR-LRX, NR-R and NR-LR .. A1-222
Models NRS-RX, NRS-LRX, NRS-R and NRS-LR.. A1-224
Models NR-CX and NR-LCX A1-226
Models NRS-CX and NRS-LCX A1-228
Models NR-A, NR-LA, NRS-A and NRS-LA .. A1-230
Models NR-B, NR-LB, NRS-B and NRS-LB .. A1-232
- Standard Length and Maximum Length of the LM Rail .. A1-234

LM Guide Wide Rail Model HRW A1-236
- Structure and Features A1-237
- Types and Features A1-238

Dimensional Drawing, Dimensional Table
Models HRW-CA and HRW-CAM A1-240
Models HRW-CR, HRW-CRM and HRW-LRM .. A1-242
- Standard Length and Maximum Length of the LM Rail .. A1-244
- Prevention of LM block from falling off of LM rail ... A1-244

LM Guide Miniature Types Model RSR .. A1-246
- Structure and Features A1-247
- Types and Features A1-248
- Accuracy of the Mounting Surface A1-250

Dimensional Drawing, Dimensional Table
Models RSR-M, RSR-N, RSR-WM, RSR-WN and RSR-WVM .. A1-252
- Standard Length and Maximum Length of the LM Rail .. A1-254
- Prevention of LM block from falling off of LM rail ... A1-254

LM Guide Separate Type (4-way Equal Load) Model HR A1-256
- Structure and Features A1-257
- Types and Features A1-258
- Example of Clearance Adjustment A1-259
- Comparison of Model Numbers with Cross-roller Guides .. A1-260

Dimensional Drawing, Dimensional Table
Models HR, HR-T, HR-M and HR-TM.... A1-262
- Standard Length and Maximum Length of the LM Rail .. A1-266
- Accessories A1-267
- Greasing Hole A1-268

LM Guide Separate Type (Radial) Model GSR ... A1-270
- Structure and Features A1-271
- Types and Features A1-272
- Example of Clearance Adjustment A1-273

Dimensional Drawing, Dimensional Table
Models GSR-T and GSR-V A1-274
- Standard Length and Maximum Length of the LM Rail .. A1-276
- Tapped-hole LM Rail Type of Model GSR .. A1-276

LM Guide Separate Type (Radial) Model GSR-R ... A1-278
- Structure and Features A1-279
- Types and Features A1-280

Dimensional Drawing, Dimensional Table
Model GSR-R A1-282
- Standard Length of the LM Rail A1-284

- Rack and Pinion A1-285
- Rack and Pinion Dimensional Drawing.... A1-288

LM Guide Cross LM Guide Model CSR .. A1-290
- Structure and Features A1-291
- Types and Features A1-292

Dimensional Drawing, Dimensional Table
Model CSR A1-294
- Standard Length and Maximum Length of the LM Rail .. A1-296
- Tapped-hole LM Rail Type of Model CSR .. A1-297

LM Guide Miniature Cross Guide Model MX.... A1-298
- Structure and Features A1-299
- Types and Features A1-299

Dimensional Drawing, Dimensional Table
Model MX A1-300
- Standard Length and Maximum Length of the LM Rail .. A1-302

LM Guide Structural Member Rail Model JR.... A1-304
- Structure and Features A1-305
- Second Moment of Inertia of the LM Rail .. A1-305
- Types and Features A1-306

Dimensional Drawing, Dimensional Table
Models JR-A, JR-B and JR-R..... A1-308
- Standard Length and Maximum Length of the LM Rail .. A1-310
- Model JB frame for LM rail clamps..... A1-311
- Model JT steel plate for LM rail clamps... A1-311

LM Guide R Guide Model HCR A1-312
- Structure and Features A1-313
- Types and Features A1-314

Dimensional Drawing, Dimensional Table
R Guide Model HCR..... A1-316

LM Guide Straight-Curved Guide Model HMG.... A1-318
- Structure and Features A1-319
- Types and Features A1-321
- Examples of Table Mechanisms A1-322

Dimensional Drawing, Dimensional Table
Model HMG A1-324
- Jointed LM rail..... A1-326

LM Guide Self-aligning Type Model NSR-TBC ... A1-328
- Structure and Features A1-329
- Types and Features A1-329

Dimensional Drawing, Dimensional Table
Model NSR-TBC..... A1-330
- Standard Length and Maximum Length of the LM Rail .. A1-332

LM Guide High Temperature Type Model HSR-M1 ... A1-334
- Structure and Features A1-335
- Types and Features A1-337
- Service Life..... A1-338

Dimensional Drawing, Dimensional Table
Models HSR-M1A and HSR-M1LA..... A1-340
Models HSR-M1B and HSR-M1LB..... A1-342
Models HSR-M1R and HSR-M1LR A1-344
Model HSR-M1YR..... A1-346
- Standard Length and Maximum Length of the LM Rail .. A1-348

LM Guide High Temperature Type Model SR-M1.... A1-350
- Structure and Features A1-351
- Thermal Characteristics of LM Rail and LM Block Materials .. A1-351
- Types and Features A1-352
- Service Life..... A1-353

Dimensional Drawing, Dimensional Table
Models SR-M1W and SR-M1V..... A1-354
Models SR-M1TB and SR-M1SB A1-356
- Standard Length and Maximum Length of the LM Rail .. A1-358

LM Guide High Temperature Type Model RSR-M1 ... A1-360
- Structure and Features A1-361
- Thermal Characteristics of LM Rail and LM Block Materials .. A1-361
- Types and Features A1-362
- Service Life..... A1-363

Dimensional Drawing, Dimensional Table
Models RSR-M1K, RSR-M1V and RSR-M1N .. A1-364
Models RSR-M1WV and RSR-M1WN... A1-366
- Standard Length and Maximum Length of the LM Rail .. A1-368
- Prevention of LM block from falling off of LM rail... A1-368

LM Guide High Corrosion Resistance Type Model HSR-M2 .. A1-370
- Structure and Features A1-371
- Types and Features A1-371

Dimensional Drawing, Dimensional Table
Model HSR-M2A..... A1-372
- Standard Length and Maximum Length of the LM Rail .. A1-374

LM Guide Medium-to-low Vacuum Type Model HSR-M1VV ... A1-376
- Structure and Features ... A1-377
- Types and Features ... A1-378
- Precautions on Design ... A1-378

Dimensional Drawing, Dimensional Table
Model HSR-M1VV ... A1-380
- Standard Length and Maximum Length of the LM Rail ... A1-382

LM Guide Oil-Free for Special Environments Model SR-MS ... A1-384
- Structure and Features ... A1-385
- Types and Features ... A1-387

Dimensional Drawing, Dimensional Table
Models SR-MSV and SR-MSW ... A1-388
- Standard Length and Maximum Length of the LM Rail ... A1-390

Structure and Features of the Caged Roller LM Guide ... A1-392
- Advantages of the Caged Roller Technology ... A1-393

Caged Roller LM Guide Ultra-high Rigidity Type Model SRG ... A1-396
- Structure and Features ... A1-397
- Types and Features ... A1-398
- Error Allowance of the Mounting Surface ... A1-401

Dimensional Drawing, Dimensional Table
Models SRG-A, SRG-LA, SRG-C and SRG-LC ... A1-402
Models SRG-C, SRG-LC and SRG-SLC ... A1-404
Model SRG-LC ... A1-406
Models SRG-V, SRG-LV, SRG-R and SRG-LR ... A1-408
Models SRG-V, SRG-LV, SRG-SLV, SRG-R, SRG-LR and SRG-SLR ... A1-410
- Standard Length and Maximum Length of the LM Rail ... A1-412
- Plate Cover ... A1-413
- Greasing Hole ... A1-413

Caged Roller LM Guide Ultra-high Rigidity Type (Low Center of Gravity) Model SRN ... A1-416
- Structure and Features ... A1-417
- Types and Features ... A1-418
- Error Allowance of the Mounting Surface ... A1-419

Dimensional Drawing, Dimensional Table
Models SRN-C and SRN-LC ... A1-420
Models SRN-R and SRN-LR ... A1-422
- Standard Length and Maximum Length of the LM Rail ... A1-424
- Plate Cover ... A1-425
- Greasing Hole ... A1-425

Caged Roller LM Guide Ultra-high Rigidity Type (Wide) Model SRW ... A1-426
- Structure and Features ... A1-427
- Types and Features ... A1-428
- Permissible Error of the Mounting Surface ... A1-429

Dimensional Drawing, Dimensional Table
Model SRW-LR ... A1-430
- Standard Length and Maximum Length of the LM Rail ... A1-432
- Greasing Hole ... A1-433

Point of Design ... A1-434
Designing the Guide System ... A1-434
- Examples of Arrangements of the Guide System ... A1-435
- Method for Securing an LM Guide to Meet the Conditions ... A1-439

Designing a Mounting Surface ... A1-441
- Designing a Mounting Surface ... A1-441
- Shoulder Height of the Mounting Base and the Corner Radius ... A1-443
- Permissible Error of the Mounting Surface ... A1-450
- Marking on the Master LM Guide and Combined Use ... A1-455

Options ... A1-457
Table of Supported Options by Models ... A1-458
Seal and Metal scraper ... A1-462
Laminated Contact Scraper LaCS ... A1-464
Side Scraper ... A1-466
Protector ... A1-467
Light-Resistance Contact Seal LiCS ... A1-469
Dimensions of Each Model with an Option Attached ... A1-470
- The LM Block Dimension (Dimension L) with LaCS and Seals Attached ... A1-470
- Incremental Dimension with Grease Nipple (When LaCS is Attached) ... A1-478
- LM Block Dimension (Dimension L) with LiCS Attached ... A1-480
- Incremental Dimension with Grease Nipple (When LiCS is Attached) ... A1-481
- Maximum Seal Resistance ... A1-482
- Maximum resistance for LaCS ... A1-485
- Maximum resistance for LiCS ... A1-486
- Maximum resistance for the side scraper ... A1-486

QZ Lubricator ... A1-487
- LM Block Dimension (Dimension L) with QZ Attached ... A1-490

List of Parts Symbols ... A1-494
Dedicated Bellows ... A1-497
- Bellows ... A1-498

Dedicated LM Cover ... A1-510
- LM Cover ... A1-511

Cap C ... A1-512
Cap GC ... A1-513
Plate Cover SV Steel Tape SP ... A1-516
Lubrication Adapter ... A1-519
Removing/mounting Jig ... A1-520
End Piece EP ... A1-521

Model No. ... A1-522

- Model Number Coding A1-522
- Notes on Ordering A1-526

Precautions on Use A1-528

Precautions on Using the LM Guide A1-528

Precautions on Handling the LM Guide for Special Environment .. A1-530
- LM Guide for Medium-to-Low Vacuum A1-530
- Oil-Free LM Guide A1-530

Precautions on Using Options for the LM Guide .. A1-531
- QZ Lubricator for the LM Guide A1-531
- Laminated Contact Scraper LaCS, Side Scraper for LM Guides .. A1-531
- Light Contact Seal LiCS for LM Guides ... A1-532
- Cap GC A1-532

Features of the LM Guide

Functions Required for Linear Guide Surface

Large permissible load	Smooth motion with no clearance
Highly rigid in all directions	Superbly high speed
High positioning repeatability	Easy maintenance
Running accuracy can be obtained easily	Can be used in various environments
High accuracy can be maintained over a long period	

Features of the LM Guide

- Large permissible load and high rigidity
- Accuracy averaging effect by absorbing mounting surface error
- Ideal four raceway, circular-arc groove, two point contact structure
- Superb error-absorbing capability with the DF design
- Low friction coefficient
- Wide array of options (QZ lubricator, Laminated contact scraper LaCS, etc.)

As a result, the following features are achieved.

Easy maintenance
Improved productivity of the machine
Substantial energy savings
Low total cost
Higher accuracy of the machine
Higher efficiency in machine design

Large Permissible Load and High Rigidity

[Large Permissible Load]

The LM Guide has raceway grooves with a radius almost equal to the ball radius, which is significantly different from the linear bushing. As shown in Fig.1, which compares size between the LM Guide and the linear bushing with similar basic dynamic load ratings, the LM Guide is much smaller than the linear bushing, indicating that the LM Guide allows a significantly compact design.
The reason for this space saving is the greater difference in permissible load between the R-groove contact structure and the surface contact structure. The R-groove contact structure (radius: 52% of the ball radius) can bear a load per ball 13 times greater than the surface contact structure. Since service life is proportional to the cube of the permissible load, this increased ball-bearing load translates into a service life that is approximately 2,200 longer than the linear bushing.

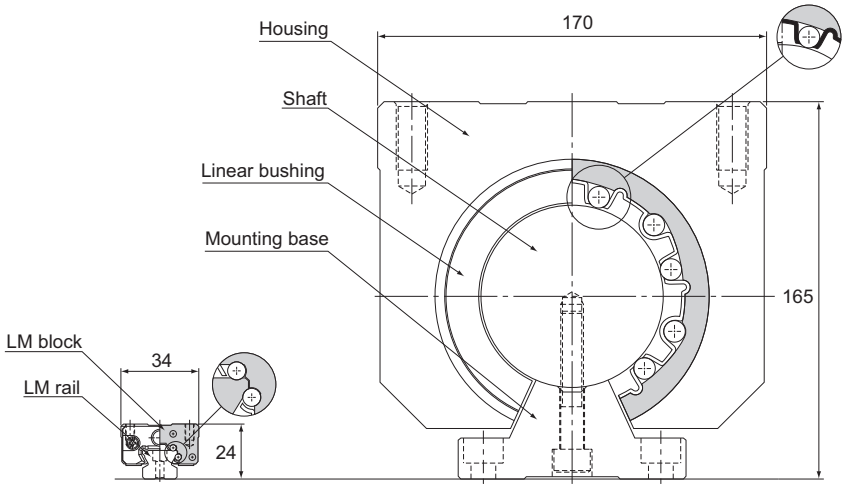

LM Guide model SSR15XW
Basic dynamic load rating: 14.7 kN

Linear Bushing model LM80 OP
Basic dynamic load rating: 7.35 kN

Fig.1 Comparison between the LM Guide and the Linear Bushing

Table1 Load Capacity per Ball (P and P_1)
Permissible contact surface pressure: 4,200 MPa

	R-groove (P)	Flat surface (P_1)	P/P_1
ϕ 3.175 (1/8´´)	0.90 kN	0.07 kN	13
ϕ 4.763 (3/16´´)	2.03 kN	0.16 kN	13
ϕ 6.350 (1/4´´)	3.61 kN	0.28 kN	13
ϕ 7.938 (5/16´´)	5.64 kN	0.44 kN	13
ϕ 11.906 (15/32´´)	12.68 kN	0.98 kN	13

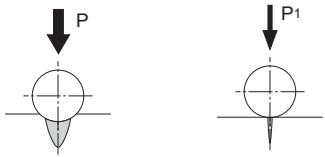

R-groove **Flat surface**

Fig.2 Load Capacity per Ball

[High Rigidity]

The LM Guide is capable of bearing vertical and horizontal loads. Additionally, due to the circular-arc groove design, it is capable of carrying a preload as necessary to increase its rigidity.
When compared with a feed screw shaft system and a spindle in rigidity, the guide surface using an LM Guide has higher rigidity.

● Example of comparing static rigidity between the LM Guide, a feed screw shaft system and a spindle

(vertical machining center with the main shaft motor of 7.5 kW)

[Components]
LM Guide: SVR45LC/C0
(C0 clearance: preload = 11.11kN)
Ball Screw: BNFN4010-5/G0
(G0 clearance: preload = 2.64kN)
Spindle: general-purpose cutting spindle

Table2 Comparison of Static Rigidity

Unit: N/μm

Components	X-axis direction	Y-axis direction	Z-axis direction
LM Guide	—	2400	9400 (radial) 7400 (reverse radial)
Ball screw	330	—	—
Spindle	250	250	280

Note) The rigidity of the feed screw shaft system includes rigidity of the shaft end support bearing.

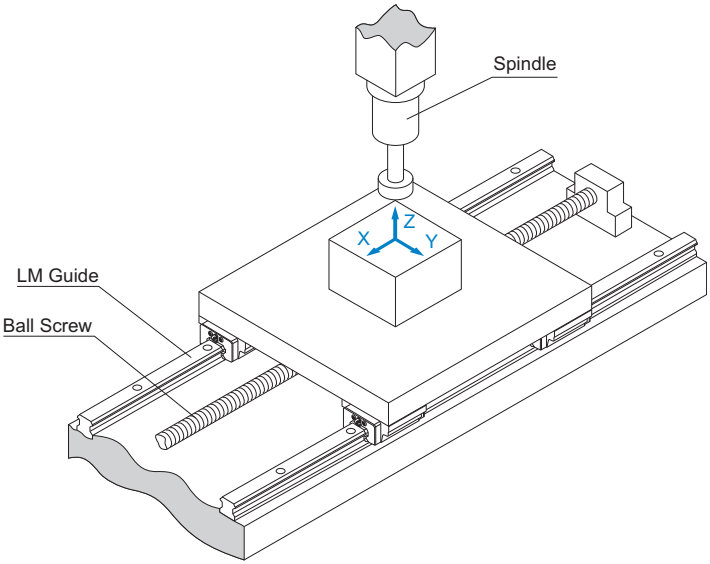

Fig.3

High Precision of Motion

[Small lost motion]

The LM Guide is provided with an ideal rolling mechanism. Therefore, the difference between dynamic and static friction is minimal and lost motion hardly occurs.

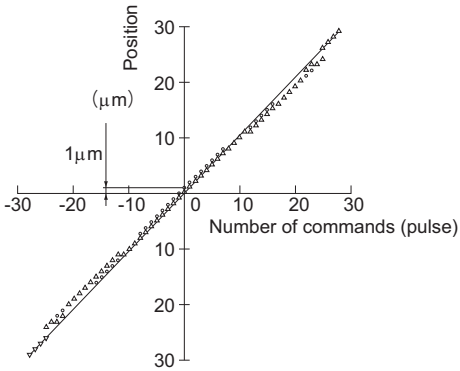

LM Guide model HSR45

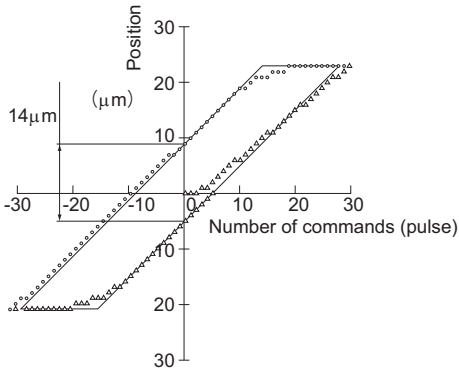

Square slide + Turcite

(Measurements are taken with the single-axis table loaded with a 500-kg weight)

Fig.4 Comparison of Lost Motion between the LM Guide and a Slide Guide

Table3 Lost Motion Comparison

Unit: μm

Type	Clearance	Test method			
		As per JIS B 6330			Based on minimum unit feeding
		10mm/min	500mm/min	4000mm/min	
LM Guide (HSR45)	C1 clearance (see table below)	2.3	5.3	3.9	0
	C0 clearance (see table below)	3.6	4.4	3.1	1
Square slide + turcite	0.02mm	10.7	15	14.1	14
	0.005mm	8.7	13.1	12.1	13

Radial clearance of the LM Guide

Unit: μm

Symbol	C1	C0
Radial clearance	–25 to –10	–40 to –25

[High running accuracy]

Use of the LM Guide allows you to achieve high running accuracy.

[Measurement method]

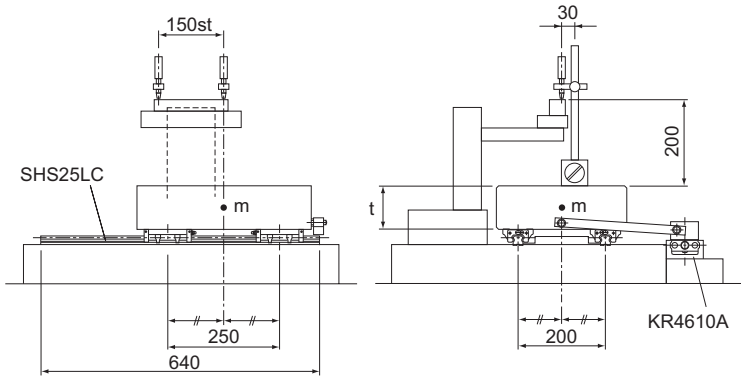

Pitching accuracy

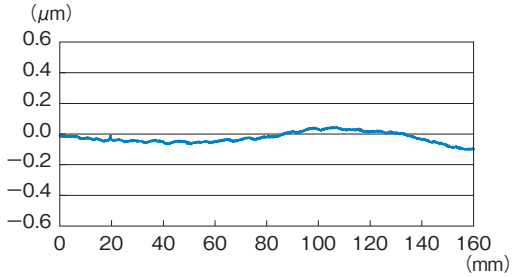

Yawing accuracy

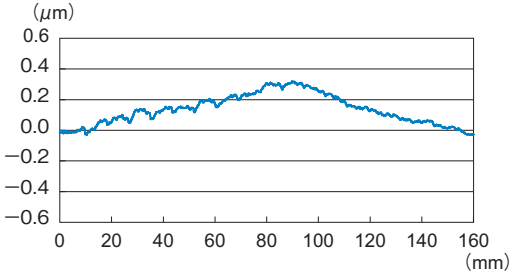

Fig.5 Dynamic Accuracy of a Single-axis Table

[High accuracy maintained over a long period]

As the LM Guide employs an ideal rolling mechanism, wear is negligible and high precision is maintained for long periods of time. As shown in Fig.6, when the LM Guide operates under both a preload and a normal load, more than 90% of the preload remains even after running 2,000 km.

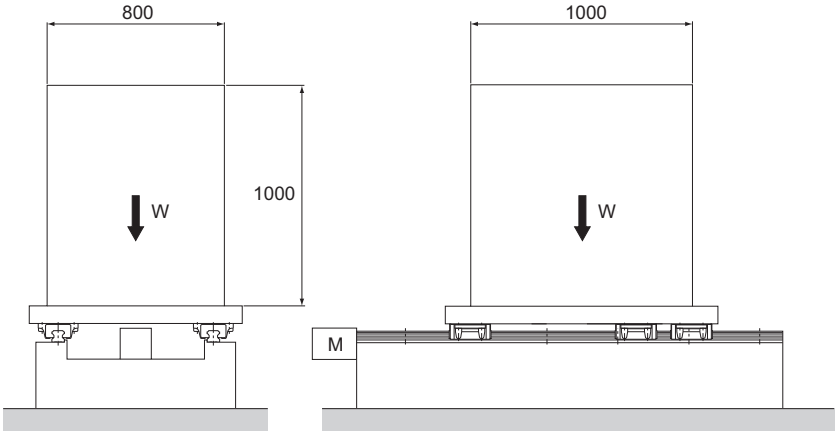

Fig.6 Condition

[Conditions]
Model No. : HSR65LA3SSC0 + 2565LP-Ⅱ
Radial clearance
: C0 (preload: 15.7 kN)
Stroke : 1,050mm
Speed : 15 m/min (stops 5 sec at both ends)
Acceleration/decelelation time in rapid motion
: 300 ms (acceleration: α = 0.833 m/s^2)
Mass : 6000kg
Drive : Ball Screws
Lubrication : Lithium soap-based grease No. 2
(greased every 100 km)

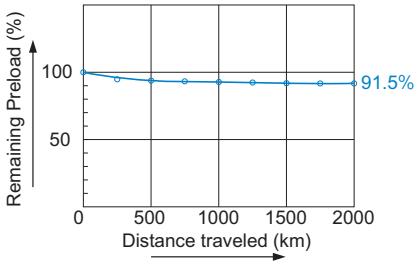

Fig.7 Distance Traveled and Remaining Preload

Accuracy Averaging Effect by Absorbing Mounting Surface Error

The LM Guide contains highly spherical balls and has a constrained structure with no clearance. In addition, it uses LM rails in parallel on multiple axes to form a guide system with multiple-axis configuration. Thus, the LM Guide is capable of absorbing misalignment in straightness, flatness or parallelism that would occur in the machining of the base to which the LM Guide is to be mounted or in the installation of the LM Guide by averaging these errors.
The magnitude of the averaging effect varies according to the length or size of the misalignment, the preload applied on the LM Guide and the number of axes in the multiple-axis configuration. When misalignment is given to one of the LM rails of the table as shown in Fig.8, the magnitude of misalignment and the actual dynamic accuracy of the table (straightness in the horizontal direction) are as shown in Fig.9.
By applying such characteristics obtained with the averaging effect, you can easily establish a guide system with high precision of motion.

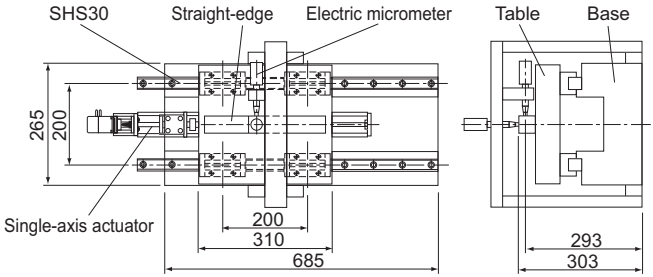

Fig.8

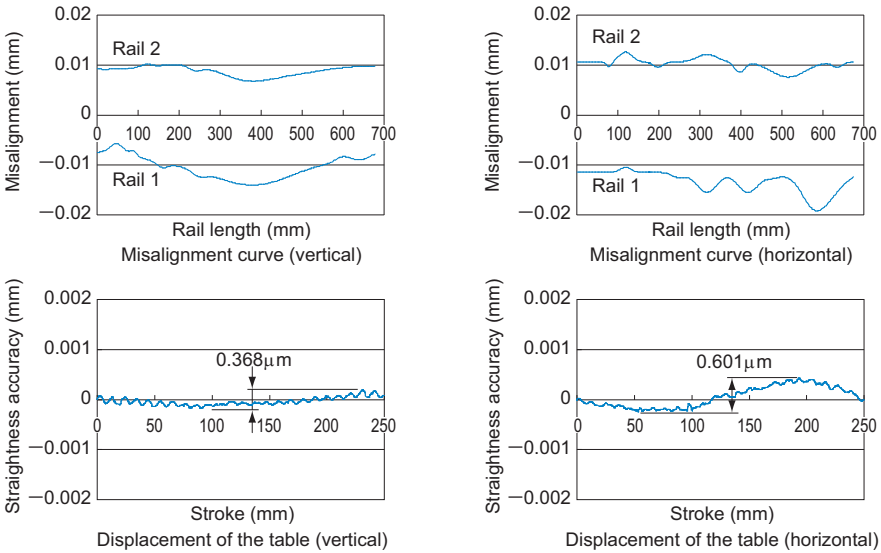

Fig.9

Even on a roughly milled mounting surface, the LM Guide drastically increases running accuracy of the top face of the table.

[Example of Installation]

When comparing the mounting surface accuracy (a) and the table running accuracy (b), the results are :

Vertical	92.5μm	→	15μm	=	1/6
Horizontal	28μm	→	4μm	=	1/7

Table4 Actual Measurement of Mounting-Surface Accuracy

Unit: μm

Direction	Mounting surface		Straightness	Average (a)
Vertical	Horizontal	A	80	92.5
		B	105	
Bottom surface	Side surface	C	40	28
		D	16	

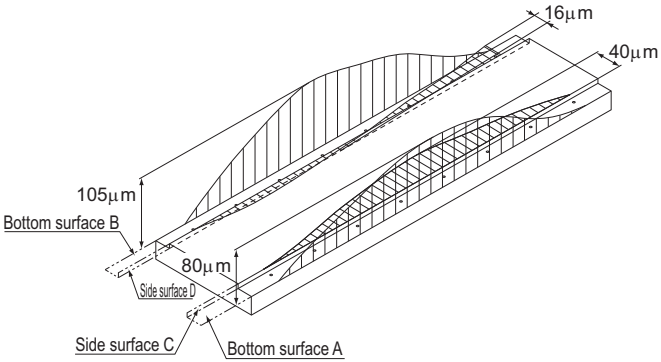

Fig.10 Surface Accuracy of the LM Guide Mounting Base (Milled Surface Only)

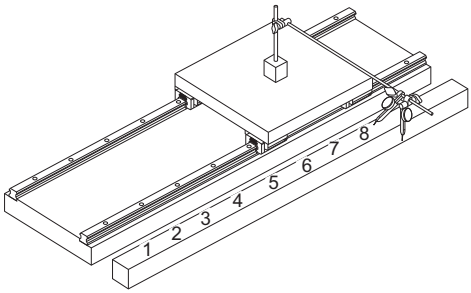

Fig.11 Running Accuracy After the LM Guide Is Mounted

Table5 Actual Measurement of Running Accuracy on the Table (Based on Measurement in Fig.10 and Fig.11)

Unit: μm

Direction	Measurement point								
	1	2	3	4	5	6	7	8	Straightness (b)
Vertical	0	+2	+8	+13	+15	+9	+5	0	15
Horizontal	0	+1	+2	+3	+2	+2	−1	0	4

Easy Maintenance

Unlike with sliding guides, the LM Guide does not incur abnormal wear. As a result, sliding surfaces do not need to be reconditioned, and precision needs not be altered. Regarding lubrication, sliding guides require forced circulation of a large amount of lubricant so as to maintain an oil film on the sliding surfaces, whereas the LM Guide only needs periodical replenishing of a small amount of grease or lubricant. Maintenance is that simple. This also helps keep the work environment clean.

Substantial Energy Savings

As shown in Table6, the LM Guide has a substantial energy saving effect.

Table6 Comparative Data on Sliding and Rolling Characteristics

Machine Specifications		
Type of machine	Single-axis surface grinding machine (sliding guide)	Three-axis surface grinding machine (rolling guide)
Overall length × overall width	13m×3.2m	12.6m×2.6m
Total mass	17000kg	16000kg
Table mass	5000kg	5000kg
Grinding area	0.7m×5m	0.7m×5m
Table guide	Rolling through V-V guide	Rolling through LM Guide installation
No. of grinding stone axes	Single axis (5.5 kW)	Three axes (5.5 kW + 3.7 kW x 2) Grinding capacity: 3 times greater

Table Drive Specifications			Ratio
Motor used	38.05kW	3.7kW	10.3
Drive hydraulic pressure	Bore diameter ϕ 160×1.2MPa	Bore diameter ϕ 65×0.7MPa	—
Thrust	23600N	2270N	10.4
Electric Power consumption	38kWH	3.7kWH	10.3
Drive hydraulic pressure oil consumption	400ℓ/year	250ℓ/year	1.6
Lubricant consumption	60 ℓ/year (oil)	3.6 ℓ/year (grease)	16.7

Low Total Cost

Compared with a sliding guide, the LM Guide is easier to assemble and does not require highly skilled technicians to perform the adjustment work. Thus, the assembly man-hours for the LM Guide are reduced, and machines and systems incorporating the LM Guide can be produced at lower cost. The figure below shows an example of difference in the procedure of assembling a machining center between using siding guides and using LM Guides.
Normally, with a sliding guide, the surface on which the guide is installed must be given a very smooth finish by grinding. However, the LM Guide can offer high precision even if the surface is milled or planed. Using the LM Guide thus cuts down on machining man-hours and lowers machining costs as a whole.

[Assembly Procedure for a Machining Center]

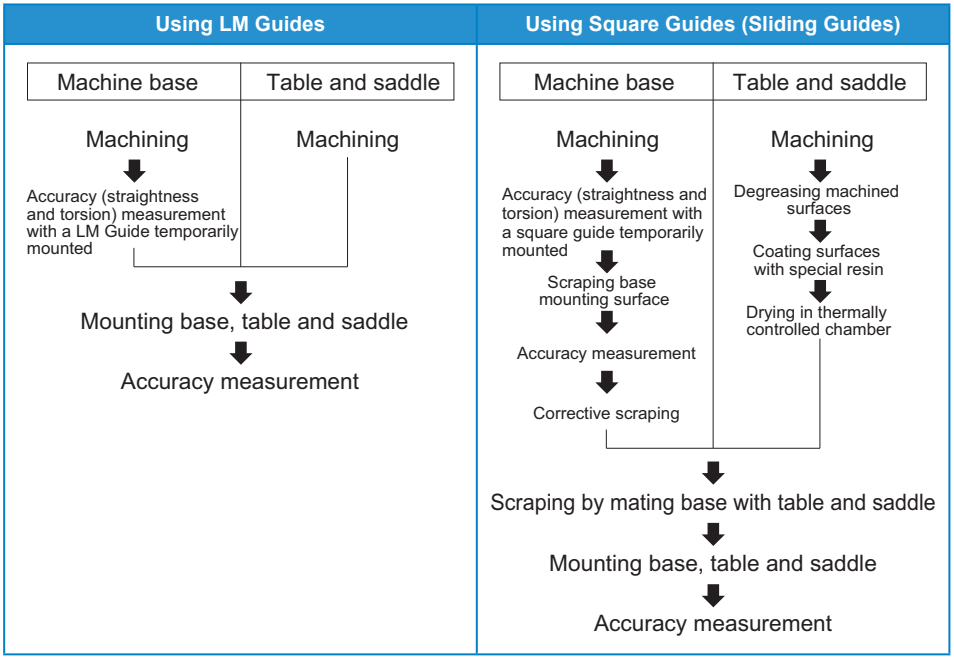

When extremely high precision is not required (e.g., running accuracy), the LM Guide can be attached to the steel plate even if the black scale on it is not removed.

Ideal Four Raceway, Circular-Arc Groove, Two-Point Contact Structure

The LM Guide has a self-adjusting capability that competitors' products do not have.
This feature is achieved with an ideal four raceway, circular-arc groove, two-point contact structure.

[Comparison of Characteristics between the LM Guide and Similar Products]

LM Guide: Four Raceway, Circular-arc Groove, Two-point Contact Structure	Other Product: Two-row, Gothic-arch Groove Four Point Contact Structure
LM Guide Model HSR	**Two-row Gothic-arch groove product**

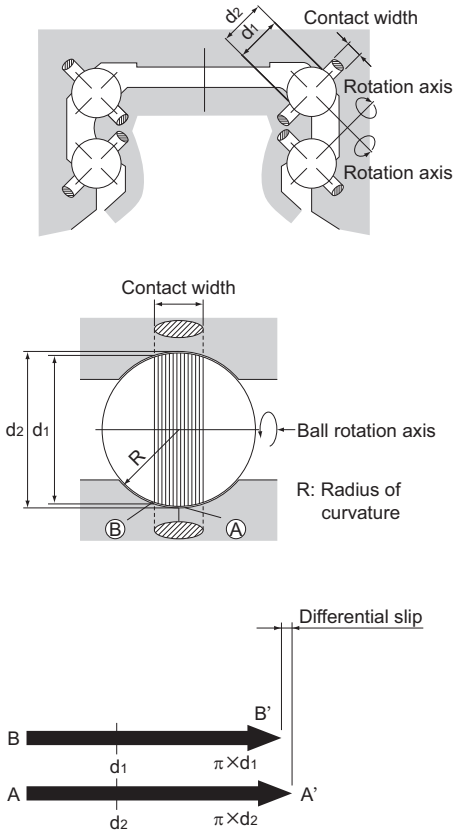

Fig. 12

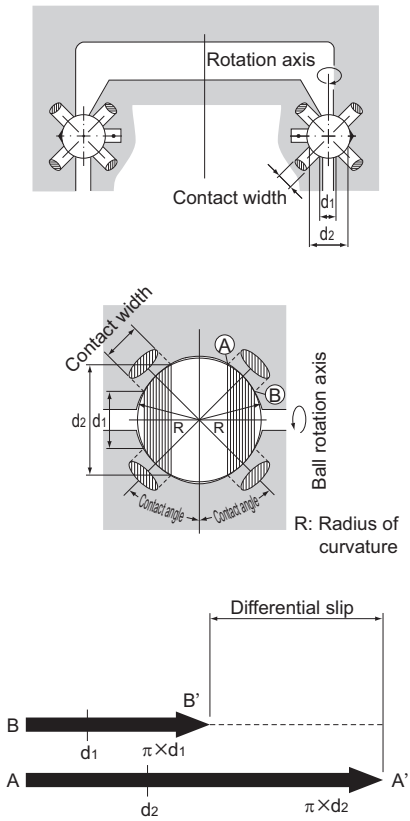

Fig. 13

As indicated in Fig. 12 and Fig. 13, when the ball rotates one revolution, the ball slips by the difference between the circumference of the diameter of inner surface (πd_1) and that of the outer contact diameter (πd_2). (This slip is called differential slip.) If the difference is large, the ball rotates while slipping, the friction coefficient increases more than 10 times and the friction resistance steeply increases.

Four Raceway, Circular-Arc Groove, Two-Point Contact Structure	Two-Row, Gothic-Arch Groove, Four Point Contact Structure
Smooth Motion	
Since the balls contact the raceway at two points in the load direction as shown in Fig. 12 and Fig. 13 on B**1-19** whether under preload or normal load, the difference between d_1 and d_2 is small, as is the differential slip, allowing a smooth rolling motion.	The difference between d_1 and d_2 in the contact area is large as shown in Fig. 12 and Fig. 13 on B**1-19**. Therefore, if any of the following occurs, the ball will generate differential slip, causing friction almost as large as sliding resistance and shortening the service as a result of abnormal friction. (1) A preload is applied (2) A lateral load is applied. (3) If two or more rails are mounted and they are not properly aligned (4) If spinning occurs
Accuracy of the Mounting Surface	
In the ideal two-point contact structure, four rows of circular arc grooves are given appropriate contact angles. With this structure, a light distortion of the mounting surface would be absorbed within the LM block due to elastic deformation of the balls and moving of the contact points to allow unforced, smooth motion. This eliminates the need for a robust mounting base with high rigidity and accuracy for machinery such as a conveyance system.	With the Gothic-arch groove product, each ball contacts the groove at four points, preventing itself from being elastically deformed and the contact points from moving (i.e., no self-adjusting capability). Therefore, even a slight distortion of the mounting surface or an accuracy error of the rail bed cannot be absorbed and smooth motion cannot be achieved. Accordingly, it is necessary to machine a highly rigid mounting base with high precision and mount a high precision rail.
Rigidity	
With the two-point contact, even if a relatively large preload is applied, the rolling resistance does not abnormally increase and high rigidity is obtained.	Since differential slip occurs due to the four-point contact, a sufficient preload cannot be applied and high rigidity cannot be obtained.
Load Rating	
Since the curvature radius of the ball raceway is 51 to 52% of the ball diameter, a large rated load can be obtained.	Since the curvature radius of the Gothic-arch groove has to be 55 to 60% of the ball diameter, the rated load is reduced to approx. 50% of that of the circular arc groove.

Difference in Rigidity

As shown in Fig.14, the rigidity widely varies according to the difference in curvature radius or difference in preload.

Curvature radius and rigidity

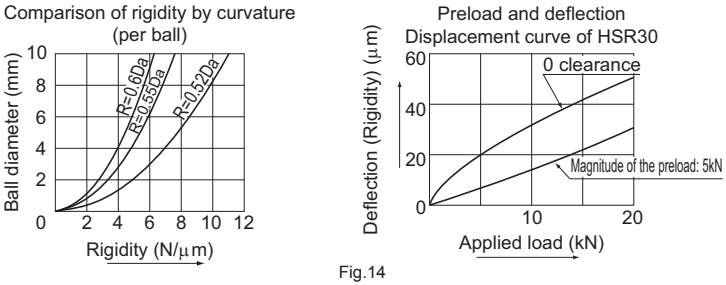

Fig.14

Difference in Service Life

Since the load rating of the gothic arch groove is reduced to approx. 50% of that of the circular arc groove, the service life also decreases to 87.5%.

[Accuracy Error of the Mounting Surface and Test Data on Rolling Resistance]

The difference between the contact structures translates into a rolling resistance.
In the gothic arch groove contact structure, each ball contacts at four points and differential slip or spinning occurs if a preload is applied to increase rigidity or an error in the mounting precision is large. This sharply increases the rolling resistance and causes abnormal wear in an early stage.
The following are test data obtained by comparing an LM Guide having the four raceway, circular-arc groove two-point contact structure and a product having the two-row, Gothic-arch, four-point contact structure.

[Sample]

(1) LM Guide
SR30W (radial type) 2 sets
HSR35A (4-way equal-load type) 2 sets
(2) Two-row Gothic-arch groove product
Type with dimensions similar to HSR30 2 sets

[Conditions]

Radial clearance: ±0μm
Without seal
Without lubrication
Load: table mass of 30 kg

Data 1: Preload and rolling resistance

When a preload is applied, the rolling resistance of the Gothic-arch groove product steeply increases and differential slip occurs. Even under a preload, the rolling resistance of the LM Guide does not increase.

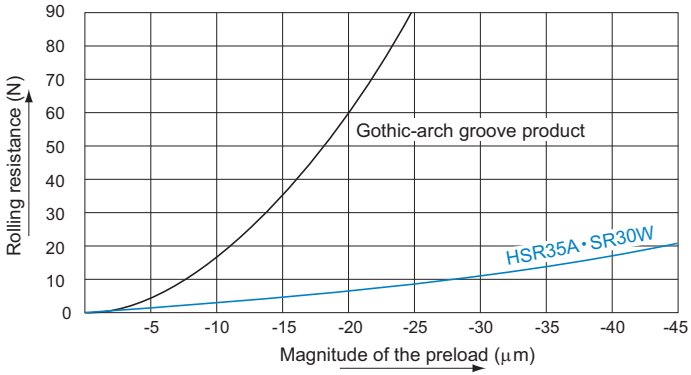

Data 2: Error in parallelism between two axes and rolling resistance

As shown in the Fig.15, part of the rails mounted in parallel is parallelly displaced and the rolling resistance at that point is measured.
With the Gothic-arch groove product, the rolling resistance is 34 N when the parallelistic error is 0.03 mm and 62 N when the error is 0.04 mm. These resistances are equivalent to the slip friction coefficients, indicating that the balls are in sliding contact with the groove.

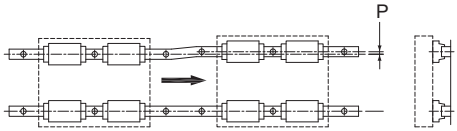

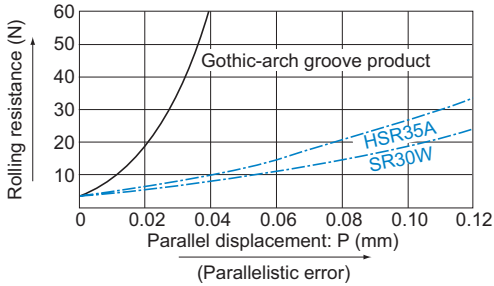

Fig.15

Data 3: Difference between the levels of the top and bottom rails and rolling resistance

Displace the bottom of either rail vertically by S and create the height difference between the two axes. Then, measure the rolling resistance. If there is a height difference between the rails, moment will act on the LM block. If the LM Guide's groove is the Gothic-arc groove, this will cause spinning. The LM Guide with the circular-arc groove is capable of absorbing the error caused by the height difference between rails as great as 0.3/200 mm, where its rolling resistance will not increase significantly.

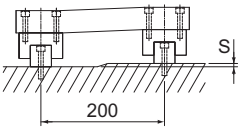

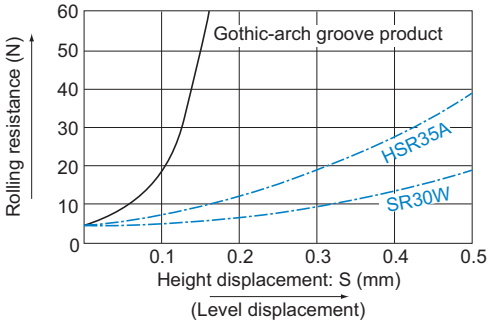

Superb Error-Absorbing Capability with the DF Design

Since the LM Guide has a contact structure similar to the front-to-front mount of angular ball bearings, it has superb self-adjusting capability.

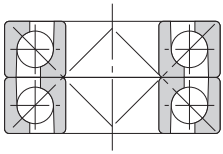

Angular Ball Bearings Mounted Front-to-Front (DF Type)
As the distance ℓ between the application points is small, the allowable tilt angle is large. (Highly self-adjustable)

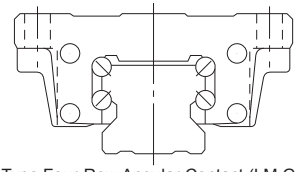

DF Type Four-Row Angular Contact (LM Guide)
An internal structure that will not be easily affected by inconsistencies on the mounting surface.

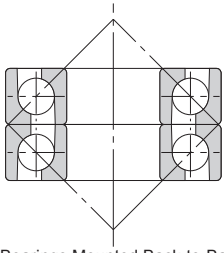

Angular Ball Bearings Mounted Back-to-Back (DB Type)
As the distance between the application points is large, the allowable tilt angle is small.

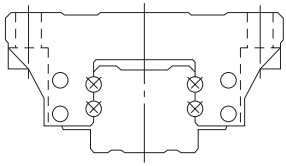

Four-Row Gothic-Arch Contact
Requires a high mounting precision.

An LM ball guide mounted on a plane receives a moment (M) due to an error in flatness or in level or a deflection of the table. Therefore, it is essential for the guide to have self-adjusting capability.

LM Guide Model HSR	Similar Product of a Competitor
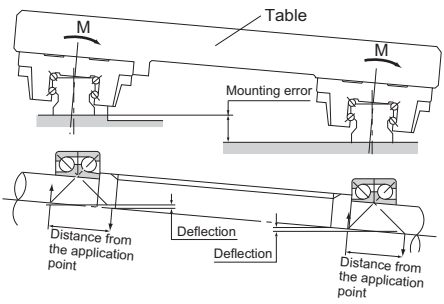	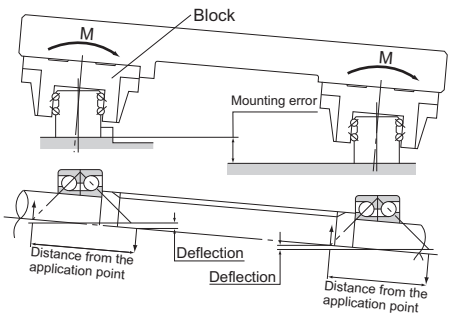
Since the distance between the application points of the bearings is small, the internal load generated from inconsistencies in the mounting surface is small, allowing movement to remain smooth.	Since the distance from the application point of the bearing is large, the internal load generated from a mounting error is large and the self-adjusting capability is small. With an LM ball guide having angular ball bearings mounted back-to-back, if there is an error in flatness or a deflection in the table, the internal load applied to the block is approx. 6 times greater than that of the front-to-front mount structure and the service life is much shorter. In addition, the fluctuation in sliding resistance is greater.

Classification Table of the LM Guides

LM Guide

Ball Guide

Caged Ball Type

Standard Type
- Model SHS — Global Standard Size
- Model SSR — Radial

Wide Type
- Model SHW — Low Center of Gravity

Miniature Type
- Model SRS — Lightweight and Compact
- Model EPF — Finite stroke

Cross Type
- Model SCR — 4-way Equal Load

Full-ball Type

Standard Type
- Model HSR — 4-way Equal Load
- Model NSR-TBC — Self-aligning
- Model SR — Radial

Miniature Type
- Model RSR — Ultra Compact

Wide Type
- Model HRW — Wide Rail, 4-way Equal Load

Optimal for Machine Tools

Model SVR	Model SVS	Model NR-X	Model NRS-X	Model SRG	Model SRW
High Contamination Resistance	High Contamination Resistance	Radial	4-way	Ultra-high Rigidity	Ultra-high Rigidity
Ball cage	Ball cage			Caged roller	Caged roller
Radial	4-way			4-way	Wide Rail

Roller Guide

With a Caged Roller

Standard Type

Model SRG
Ultra-high Rigidity

Model SRN
Ultra-high Rigidity
Low Center of Gravity

Wide Type

Model SRW
Ultra-high Rigidity

Separate Type

Model HR
Heavy Load

Model GSR
Interchangeable, Self-aligning

Model GSR-R
Interchangeable, Self-aligning
With Rack

Model JR Type

Model JR
Structural Member Rail
4-way Equal Load

Cross Type

Model CSR
4-way Equal Load

Model MX
Miniature Cross

Special Environment Types

Model HSR-M1
High Temperature
4-way Equal Load

Model SR-M1
High Temperature
Radial

Model HSR-M2
High Corrosion Resistance
4-way Equal Load

Model RSR-M1
High Temperature

Model HSR-M1VV
Medium-to-Low Vacuum

Model SR-MS
Oil-Free

R Guide Type

Model HCR

Straight-Curved Type

Model HMG

Flowchart for Selecting an LM Guide

[Steps for Selecting an LM Guide]

The following flowchart can be used as reference for selecting an LM Guide.

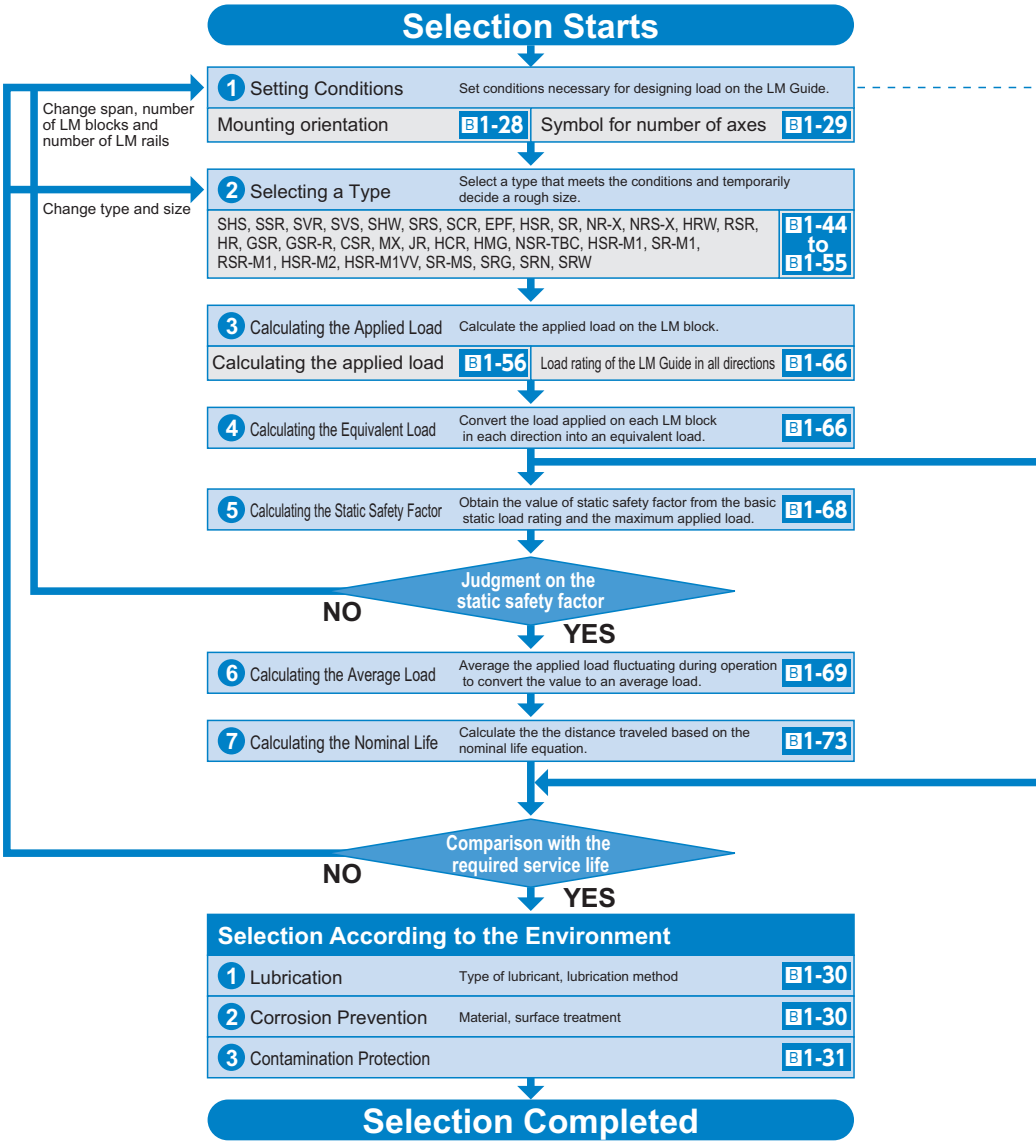

- Space in the guide section
- Dimensions (span, number of LM blocks, number of LM rails, thrust)
- Installation direction (horizontal, vertical, slant mount, wall mount, suspended)
- Magnitude, direction and position of the working load
- Operating frequency (duty cycle)
- Speed (acceleration)
- Stroke length
- Required service life
- Precision of motion
- Environment
- In a special environment (vacuum, clean room, high temperature, environment exposed to contaminated environment, etc.), it is necessary to take into account material, surface treatment, lubrication and contamination protection.

Prediction the Rigidity

1	Selecting a Radial Clearance (Preload)	B1-85
2	Service Life with a Preload Considered	B1-86
3	Rigidity	B1-86
4	Radial Clearance Standard for Each Model	A1-70
5	Designing the Guide System	A1-434

Determining the Accuracy

1	Accuracy Standards	B1-87
2	Guidelines for Accuracy Grades by Machine Type	B1-88
3	Accuracy Standard for Each Model	A1-75~

Setting Conditions

Conditions of the LM Guide

[Mounting Orientation]

The LM Guide can be mounted in the following five orientations.
If the mounting orientation is other than horizontal use, the lubricant may not reach the raceway completely.
Be sure to let THK know the installation direction and the exact position in each LM block where the grease nipple or the piping joint should be attached.
For the lubrication, see A24-2.

[Mounting Orientation]

Horizontal (symbol: H)	Inverted (symbol: R)	Wall mount (symbol: K)
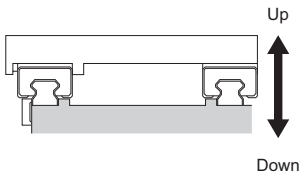	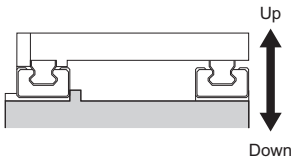	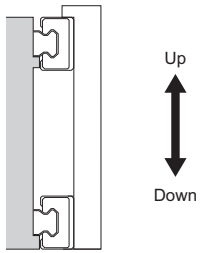

Vertical (symbol: V)	Slant mount (symbol: T)
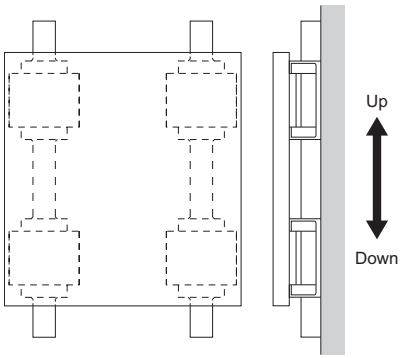	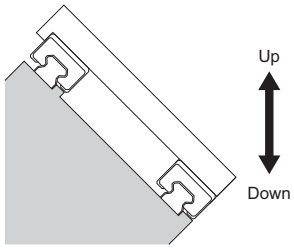

[Symbol for Number of Axes]

If two or more units of the LM Guide are parallelly used in combination on the same plane, specify the number of the LM rails (symbol for number of axes) used in combination in advance.
(For accuracy standards and radial clearance standards, see A1-75 and A1-70, respectively.)

Model number coding

SHS25C2SSCO+1000LP -Ⅱ

Model number (details are given on the corresponding page of the model)

Symbol for number of axes
("Ⅱ" indicates 2 axes. No symbol for a single axis)

[Symbol for Number of Axes]

Symbol for number of axes: none	Symbol for number of axes: Ⅱ	Symbol for number of axes: Ⅱ
Required number of axes: 1	**Required number of axes: 2**	**Required number of axes: 2**
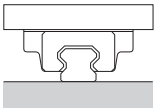	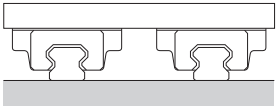 Note: When placing an order, specify the number in multiple of 2 axes.	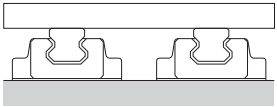 Note: When placing an order, specify the number in multiple of 2 axes.
Symbol for number of axes: Ⅲ	**Symbol for number of axes: Ⅳ**	**Other**
Required number of axes: 3	**Required number of axes: 4**	**Required number of axes: 2**
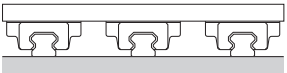 Note: When placing an order, specify the number in multiple of 3 axes.	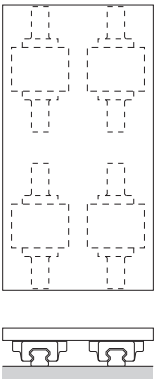 Note: When placing an order, specify the number in multiple of 4 axes.	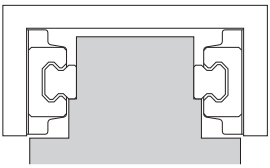 Using 2 axes opposed to each other

[Service environment]

● **Lubrication**

When using an LM system, it is necessary to provide effective lubrication. Without lubrication, the rolling elements or the raceway may be worn faster and the service life may be shortened.
A lubricant has effects such as the following.
(1) Minimizes friction in moving elements to prevent seizure and reduce wear.
(2) Forms an oil film on the raceway to decrease stress acting on the surface and extend rolling fatigue life.
(3) Covers the metal surface to prevent rust formation.
To fully bring out the LM Guide's functions, it is necessary to provide lubrication according to the conditions.
If the mounting orientation is other than horizontal use, the lubricant may not reach the raceway completely.
Be sure to let THK know the mounting orientation and the exact position in each LM block where the grease nipple or the piping joint should be attached. For the mounting orientation and the lubrication, see B1-28 and B24-2, respectively.
Even with an LM Guide with seals, the internal lubricant gradually seeps out during operation. Therefore, the system needs to be lubricated at an appropriate interval according to the conditions.

● **Corrosion Prevention**

■**Determining a Material**

Any LM system requires a material that meets the environments. For use in environments where corrosion resistance is required, some LM system models can use martensite stainless steel.
(Martensite stainless steel can be used for LM Guide models SSR, SHW, SRS, HSR, SR, HRW, RSR and HR.)
The HSR series includes HSR-M2, a highly corrosion resistant LM Guide using austenite stainless steel, which has high anti-corrosive effect. For details, see A1-370.

■**Surface Treatment**

The surfaces of the rails and shafts of LM systems can be treated for anti-corrosive or aesthetic purposes.
THK offers THK-AP treatment, which is the optimum surface treatment for LM systems.
There are roughly three types of THK-AP treatment: AP-HC, AP-C and AP-CF. (See B0-20.)

● Contamination Protection

When foreign material enters an LM system, it will cause abnormal wear or shorten the service life, and it is necessary to prevent foreign material from entering the system. When entrance of foreign material is predicted, it is important to select an effective sealing device or dust-control device that meets the environment conditions.

THK offers contamination protection accessories for LM Guides by model number, such as end seals made of special synthetic rubber with high wear resistance, and side seals and inner seals for further increasing dust-prevention effect.

In addition, for locations with adverse environment, Laminated Contact Scraper LaCS and dedicated bellows are available by model number. Also, THK offers dedicated caps for LM rail mounting holes, designed to prevent cutting chips from entering the LM rail mounting holes.

When it is required to provide contamination protection for a Ball Screw in an environment exposed to cutting chips and moisture, we recommend using a telescopic cover that protects the whole system or a large bellows.

For the options, see B1-103.

[Special environments]

Clean Room

In a clean environment generation of dust from the LM system has to be reduced and anti-rust oil cannot be used. Therefore, it is necessary to increase the corrosion resistance of the LM system. In addition, depending on the level of cleanliness, a dust collector is required.

Dust Generation from the LM System

■Measure to Prevent Dust Generation Resulting from Flying Grease

THK AFE-CA and AFF Grease
Use environmentally clean grease that produces little dust.

■Measure to Reduce Dust Generation Resulting from Metallic Abrasion Dust

Caged Ball LM Guide
Use the Caged Ball LM Guide, which has no friction between balls and generates little metallic abrasion dust, to allow generation of dust to be minimized.

Corrosion Prevention

■Material-based Measure

Stainless Steel LM Guide
This LM Guide uses martensite stainless steel, which has corrosion resistant effect.

Highly Corrosion Resistant LM Guide
It uses austenite stainless steel, which has a high corrosion resistant effect, in its LM rail.

■Measure Through Surface Treatment

THK AP-HC, AP-C and AP-CF Treatment
The LM system is surface treated to increase corrosion resistance.

Caged Ball LM Guide
Supported models: SHS SSR SVR/SVS SHW SRS SCR EPF

Caged Roller LM Guide
Supported models: SRG SRN SRW

Stainless Steel LM Guide
Supported models: SSR SHW SRS HSR SR HRW HR RSR

LM Guides for Special Environment
Supported models: High Corrosion Resistance HSR-M2, Oil-Free SR-MS

Surface Treatment

Grease

SHS
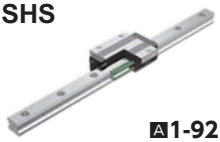
A1-92

SSR
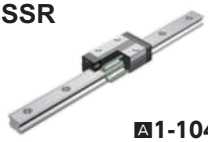
A1-104

SVR/SVS
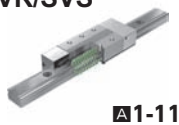
A1-116

SHW
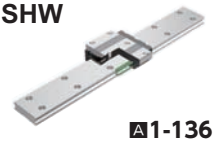
A1-136

SRS
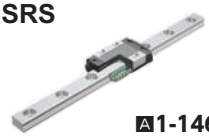
A1-146

SCR

A1-162

EPF
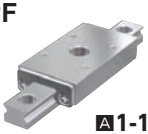
A1-170

SRG

A1-396

SRN

A1-416

SRW
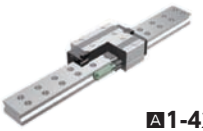
A1-426

SSR
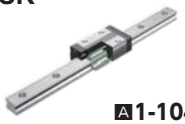
A1-104

SHW

A1-136

SRS

A1-146

HSR

A1-178

SR

A1-204

HRW

A1-236

HR

A1-256

RSR

A1-246

HSR-M2

A1-370

SR-MS

A1-384

THK AP-HC Treatment
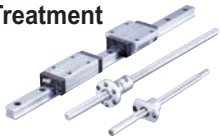
B0-20

THK AFE-CA Grease

A24-12

THK AFF Grease

A24-14

Vacuum

In a vacuum environment, measures are required to prevent gas from being emitted from a resin and the scattering of grease. Anti-rust oil cannot be used, therefore, it is necessary to select a product with high corrosion resistance.

■Measure to Prevent Emission of Gas from Resin

Stainless Steel LM Guide

The endplate (ball circulation path normally made of resin) of the LM block is made of stainless steel to reduce emission of gas.

■Measure to Prevent Grease from Evaporating

Vacuum Grease

If a general-purpose grease is used in a vacuum environment, oil contained in the grease evaporates and the grease looses lubricity. Therefore, use a vacuum grease that uses fluorine based oil, whose vapor pressure is low, as the base oil.

■Corrosion Prevention

Stainless Steel LM Guide

In a vacuum environment, use a stainless steel LM Guide, which is highly corrosion resistant.

High Temperature LM Guide

If high temperature is predicted due to baking, use a High Temperature LM Guide, which is highly resistant to heat and corrosion.

■Highly Corrosion Resistant LM Guide

This LM Guide uses austenite stainless steel, which has a high anti-corrosion effect, in the LM rail.

Oil-Free

In environments susceptible to liquid lubricants, a lubrication method other than grease or oil is required.

■Dry Lubricant

Dry Lubrication S-Compound Film

Dry Lubrication S-Compound Film is a fully dry lubricant developed for use under atmospheric to high-vacuum environments.
It has superior characteristics in load carrying capacity, wear resistance and sealability to other lubrication systems.

High Temperature LM Guide

Supported models: HSR-M1 SR-M1 RSR-M1

LM Guides for Special Environment

Supported models: For Medium-to-Low Vacuum HSR-M1VV
Oil-Free SR-MS

Highly Corrosion Resistant LM Guide

Stainless Steel LM Guide

Supported models: HSR SR HRW HR RSR

Vacuum Grease

Oil-Free LM Guide

HSR-M1

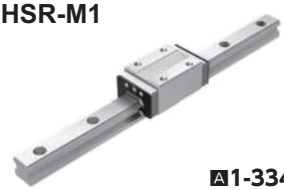

A1-334

SR-M1

A1-350

RSR-M1

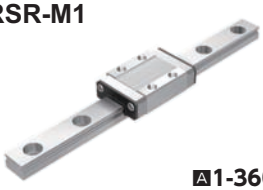

A1-360

HSR-M1VV

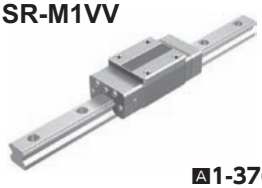

A1-376

SR-MS

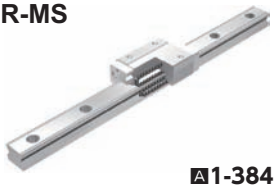

A1-384

HSR-M2

A1-370

HSR

A1-178

SR

A1-204

HRW

A1-236

HR

A1-256

RSR

A1-246

SR-MS

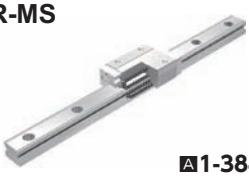

A1-384

Corrosion Prevention

As with clean room applications, it is necessary to increase corrosion resistance through material selection and surface treatment.

■Material-based Measure

Stainless Steel LM Guide

This LM Guide uses martensite stainless steel, which has an anti-corrosion effect.

Highly Corrosion Resistant LM Guide

It uses austenite stainless steel, which has a high anti-corrosion effect, in its LM rail.

■Measure Through Surface Treatment

THK AP-HC, AP-C and AP-CF Treatment

The LM system is surface treated to increase corrosion resistance.

Stainless Steel LM Guide

Supported models: SSR SHW SRS HSR SR HRW HR RSR

Highly Corrosion Resistant LM Guide

Surface Treatment

SSR 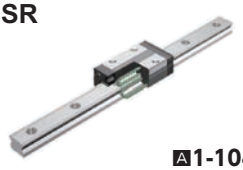 A1-104	SHW 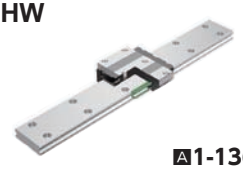 A1-136	SRS A1-146
HSR 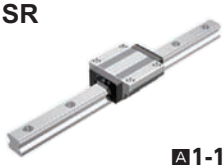 A1-178	SR A1-204	HRW 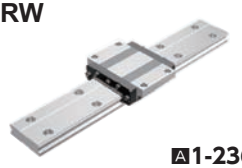 A1-236
HR A1-256	RSR A1-246	

HSR-M2

A1-370

THK AP-HC Treatment

B0-20

THK AP-C Treatment

B0-20

THK AP-CF Treatment

B0-20

High Speed

In a high speed environment, it is necessary to apply an optimum lubrication method that reduces heat generation during high speed operation and increases grease retention.

■Measures to Reduce Heat Generation

Caged Ball LM Guide

Use of a ball cage eliminates friction between balls to reduce heat generation. In addition, grease retention is increased, thus to achieve long service life and high speed operation.

THK AFA Grease, AFJ Grease

It reduces heat generation in high speed operation and has superb lubricity.

■Measure to Improve Lubrication

QZ Lubricator

Continuous oil lubrication ensures that the lubrication and maintenance interval can significantly be extended. It also applies the right amount of oil to the raceway, making itself an eco-friendly lubrication system that does not contaminate the surrounding area.

Caged Ball LM Guide

Supported models: SHS SSR SVR/SVS SHW SRS SCR EPF

Caged Roller LM Guide

Supported models: SRG SRN SRW

QZ Lubricator

Grease

SHS

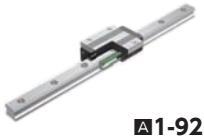

A1-92

SSR

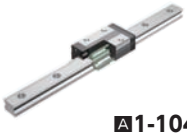

A1-104

SVR/SVS

A1-116

SHW

A1-136

SRS

A1-146

SCR

A1-162

EPF

A1-170

SRG

A1-396

SRN

A1-416

SRW

A1-426

QZ Lubricator for the LM Guide

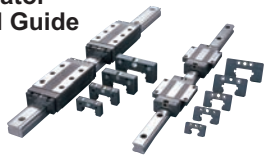

A1-487

THK AFA Grease

A24-7

THK AFJ Grease

A24-20

High Temperature

In a high temperature environment, dimensional alterations caused by heat is problematic. Use a High Temperature LM Guide, which is heat resistant and has minimal dimensional alterations after being heated. Also, use a high temperature grease.

■Heat Resistance

High Temperature LM Guide

A special heat treatment to maintain dimensional stability minimizes dimensional variations due to heating and cooling.

■Grease

High Temperature Grease

Use a high temperature grease with which the rolling resistance of the LM system is consistent even at high temperature.

Low Temperature

In a low temperature environment, use an LM system with a minimal amount of resin components and a grease that minimize fluctuations in rolling resistance, even at low temperature.

■Impact of Low Temperature on Resin Components

Stainless Steel LM Guide

The endplate (ball circulation path normally made of resin) of the LM block is made of stainless steel.

■Corrosion Prevention

Provide surface treatment to the LM system to increase its corrosion resistance.

■Grease

Use THK AFC Grease, with which the rolling resistance of the system little is consistent even at low temperature.

Micro Motion

Micro strokes cause the oil film to break, resulting in poor lubrication and early wear. In such cases, select a grease with which the oil film strength is high and an oil film can easily be formed.

■Grease

THK AFC Grease

AFC Grease is a urea-based grease that excels in oil film strength and wear resistance.

High Temperature LM Guide

Supported models: HSR-M1 SR-M1 RSR-M1 HSR-M1VV

High Temperature Grease

Stainless Steel LM Guide

Supported models: SSR SHW SRS HSR SR HRW HR RSR

Surface Treatment

Low Temperature Grease

Grease

HSR-M1

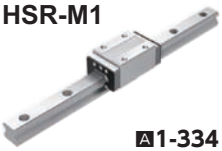

A1-334

SR-M1

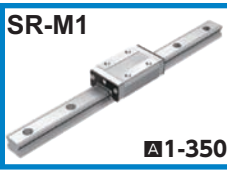

A1-350

RSR-M1

A1-360

HSR-M1VV

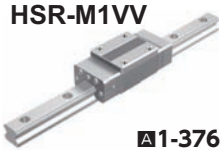

A1-376

SSR

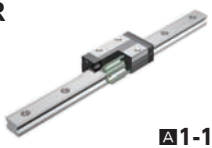

A1-104

SHW

A1-136

SRS

A1-146

HSR

A1-178

SR

A1-204

HRW

A1-236

HR

A1-256

RSR

A1-246

THK AP-CF Treatment

B0-20

THK AFC Grease

A24-10

THK AFC Grease

A24-10

Foreign Matter

If foreign matter enters the LM system, it will cause abnormal wear and shorten the service life. Therefore, it is necessary to prevent such entrance of foreign matter.
Especially in an environment containing small foreign matter or a water-soluble coolant that a telescopic cover or a bellows cannot remove, it is necessary to attach a contamination protection accessory capable of efficiently removing foreign matter.

■Metal Scraper

It is used to remove relatively large foreign objects such as cutting chips, spatter and sand or hard foreign matter that adhere to the LM rail.

■Laminated Contact Scraper LaCS

Unlike a metal scraper, it removes foreign matter while it is in contact with the LM rail. Therefore, it demonstrates a high contamination protection effect against small foreign matter, which has been difficult to remove with conventional metal scrapers.

■QZ Lubricator

QZ Lubricator is a lubrication system that feeds the right amount of lubricant by closely contacting its highly oil-impregnated fiber net to the ball raceway.

■Metal Cap Dedicated for LM Rail Mounting Holes GC Cap

GC cap is a metallic cap that plugs the LM rail mounting hole (article compliant with the RoHS Directives). It prevents the entrance of foreign material and coolant from the LM rail top face (mounting hole) under harsh environments, and significantly increases the dust control performance of the LM Guide if used with a dust control seal.

■Protector

The protector minimizes the entrance of foreign material even in harsh environments where foreign material such as fine particles and liquids are present.

LM Guide
+Metal scraper
+Contact scraper LaCS
+Cap GC, etc.

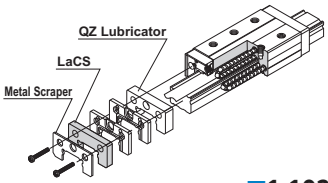

B1-103

Supported models
Caged Ball LM Guide
SHS SSR SVR/SVS SHW SRS
Full Ball LM Guide
HSR NR/NRS-X

Caged Roller LM Guide
+Metal scraper
+Contact scraper LaCS
+Cap GC, etc.

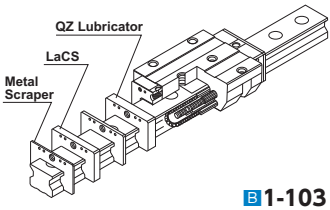

B1-103

Supported models
SRG

Caged Ball LM Guide

SHS

A1-92

SSR

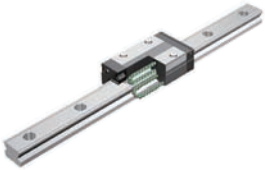

A1-104

SHW

A1-136

SRS

A1-146

SVR/SVS

Featuring the protector A1-116

Full ball LM Guide

HSR

A1-178

NR/NRS-X

A1-216

Caged Roller LM Guide

SRG

Featuring the protector A1-396

Selecting a Type

Types of LM Guides

THK offers a wide array of types and dimensions with LM Guides as standard so that you can select the optimal product for any application. With the unit structure of each model, you can easily obtain high running accuracy with no clearance simply by mounting the product on a plane surface with bolts. We have a proven track record and know-how in extensive applications with LM Guides.

Classification		Type		Specification Table*	Load capacity diagram	Basic load rating (kN)	
						Basic dynamic load rating	Basic static load rating
Radial type	Caged Ball LM Guide		SSR-XW	▶A1-108	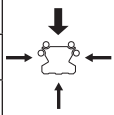	14.7 to 64.6	16.5 to 71.6
			SSR-XV	▶A1-110		9.1 to 21.7	9.7 to 22.5
			SSR-XTB	▶A1-112		14.7 to 31.5	16.5 to 36.4
	Full-Complement Ball LM Guides		SR-W	▶A1-210		13.8 to 411	20.5 to 537
			SR-M1W	▶A1-354		13.8 to 60.4	20.5 to 81.8
			SR-V	▶A1-210		9.1 to 40.9	11.7 to 46.7
			SR-M1V	▶A1-354		9.1 to 40.9	11.7 to 46.7
			SR-TB	▶A1-212		13.8 to 136	20.5 to 179
			SR-M1TB	▶A1-356		13.8 to 60.4	20.5 to 81.8
			SR-SB	▶A1-212		9.1 to 40.9	11.7 to 46.7
			SR- M1SB	▶A1-356		9.1 to 40.9	11.7 to 46.7
	Oil-Free LM Guides for Special Environ-ments		SR-MSV	▶A1-388		—	—
			SR-MSW	▶A1-388		—	—
	Caged Ball LM Guides for Machine Tools high-rigidity model for ultra-heavy loads		SVR-C	▶A1-126	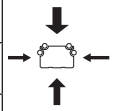	48 to 260	68 to 328
			SVR-LC	▶A1-126		57 to 340	86 to 481
			SVR-R	▶A1-122		48 to 260	68 to 328
			SVR-LR	▶A1-122		57 to 340	86 to 481
			SVR-CH	▶A1-132		90 to 177	115 to 238
			SVR-LCH	▶A1-132		108 to 214	159 to 312
			SVR-RH	▶A1-130		90 to 177	115 to 238
			SVR-LRH	▶A1-130		108 to 214	159 to 312

* For specification tables for each model, please see "A Product Descriptions."

	External dimensions (mm)		Features	Major application
	Height	Width		
	24 to 48	34 to 70	• Long service life, long-term maintenance-free operation • Low dust generation, low noise, acceptable running sound • Superbly high speed • Smooth motion in all mounting orientations • Thin, compact design, large radial load capacity • Superb in planar running accuracy • Superb capability of absorbing mounting error • Stainless steel type also available as standard	• Surface grinder table • Tool grinder table • Electric discharge machine • Printed circuit board drilling machine • Chip mounter • High-speed transfer equipment • Traveling unit of robots • Machining center • NC lathe • Five axis milling machine • Conveyance system • Mold guide of pressing machines • Inspection equipment • Testing machine • Food-related machine • Medical equipment • 3D measuring instrument • Packaging machine • Injection molding machine • Woodworking machine • Ultra precision table • Semiconductor/liquid crystal manufacturing equipment
	24 to 33	34 to 48		
	24 to 33	52 to 73		
	24 to 135	34 to 250	• Thin, compact design, large radial load capacity • Superb in planar running accuracy • Superb capability of absorbing mounting error • Stainless steel type also available as standard • Type M1, achieving max service temperature of 150℃, also available	
	24 to 48	34 to 70		
	24 to 48	34 to 70		
	24 to 48	34 to 70		
	24 to 68	52 to 140		
	24 to 48	52 to 100		
	24 to 48	52 to 100		
	24 to 48	52 to 100		
	24 to 28	34 to 42	• Minimum generation of outgases (water, organic matter) • Small amount of particles generated • Can be used at high temperature (up to 150℃)	• Photolithography machine • Organic EL display manufacturing machine • Ion implantation equipment
	24 to 28	34 to 42		
	31 to 75	72 to 170	• Long service life, long-term maintenance-free operation • Low dust generation, low noise, acceptable running sound • Superbly high speed • Smooth motion in all mounting orientations • Ultra-heavy load capacity optimal for machine tools • Thin, compact design, large radial load capacity • High vibration resistance and impact resistance due to improved damping characteristics • Superb in planar running accuracy	• Machining center • NC lathe • Grinding machine • Five axis milling machine • Jig borer • Drilling machine • NC milling machine • Horizontal milling machine • Mold processing machine • Graphite working machine • Electric discharge machine • Wire-cut electric discharge machine
	31 to 75	72 to 170		
	31 to 75	50 to 126		
	31 to 75	50 to 126		
	48 to 70	100 to 140	• Long service life, long-term maintenance-free operation • Low dust generation, low noise, acceptable running sound • Superbly high speed • Smooth motion in all mounting orientations • Ultra-heavy load capacity optimal for machine tools • Large radial load capacity • High vibration resistance and impact resistance due to improved damping characteristics • Superb in planar running accuracy • Has dimensions almost the same as that of the full-ball type LM Guide model HSR, which is practically a global standard size	
	48 to 70	100 to 140		
	55 to 80	70 to 100		
	55 to 80	70 to 100		

Classification		Type		Specification Table*	Load capacity diagram	Basic load rating (kN)	
						Basic dynamic load rating	Basic static load rating
Radial type	Full-Complement Ball LM Guides for Machine Tools high-rigidity model for ultra-heavy loads		NR-RX	▶A1-222		37.1 to 208.7	68.1 to 351.7
			NR-LRX	▶A1-222		45.4 to 268.9	90.8 to 505.5
			NR-CX	▶A1-226		37.1 to 208.7	68.1 to 351.7
			NR-LCX	▶A1-226		45.4 to 268.9	90.8 to 505.5
			NR-R	▶A1-222		271 to 479	610 to 1040
			NR-LR	▶A1-222		355 to 599	800 to 1300
			NR-A	▶A1-230		271 to 479	610 to 1040
			NR-LA	▶A1-230		355 to 599	800 to 1300
			NR-B	▶A1-232		271 to 479	610 to 1040
			NR-LB	▶A1-232		355 to 599	800 to 1300
4-way type	LM Guides for Machine Tools high-rigidity model for ultra-heavy loads		SVS-R	▶A1-124		37 to 199	52 to 251
			SVS-LR	▶A1-124		44 to 261	66 to 368
			SVS-C	▶A1-128		37 to 199	52 to 251
			SVS-LC	▶A1-128		44 to 261	66 to 368
			SVS-RH	▶A1-130		69 to 136	88 to 182
			SVS-LRH	▶A1-130		83 to 164	122 to 239
			SVS-CH	▶A1-132		69 to 136	88 to 182
			SVS-LCH	▶A1-132		83 to 164	122 to 239
	Full-Complement Ball LM Guides for Machine Tools high-rigidity model for ultra-heavy loads		NRS-CX	▶A1-228		28.4 to 159.8	52.2 to 269.4
			NRS-LCX	▶A1-228		34.7 to 206	69.6 to 387.2
			NRS-RX	▶A1-224		28.4 to 159.8	52.2 to 269.4
			NRS-LRX	▶A1-224		34.7 to 206	69.6 to 387.2
4-way equal load type	Full-Complement Ball LM Guides for Machine Tools high-rigidity model for ultra-heavy loads		NRS-A	▶A1-230		212 to 376	431 to 737
			NRS-LA	▶A1-230		278 to 470	566 to 920
			NRS-B	▶A1-232		212 to 376	431 to 737
			NRS-LB	▶A1-232		278 to 470	566 to 920
			NRS-R	▶A1-224		212 to 376	431 to 737
			NRS-LR	▶A1-224		278 to 470	566 to 920

* For specification tables for each model, please see "A Product Descriptions."

External dimensions (mm)		Features	Major application
Height	Width		
31 to 75	50 to 126	• Low dust generation, low noise, acceptable running sound • Superbly high speed • Smooth motion in all mounting orientations • Ultra-heavy load capacity optimal for machine tools • Thin, compact design, large radial load capacity • High vibration resistance and impact resistance due to improved damping characteristics • Superb in planar running accuracy	• Machining center • NC lathe • Grinding machine • Five axis milling machine • Jig borer • Drilling machine • NC milling machine • Horizontal milling machine • Mold processing machine • Graphite working machine • Electric discharge machine • Wire-cut electric discharge machine
31 to 75	50 to 126		
31 to 75	72 to 170		
31 to 75	72 to 170		
83 to 105	145 to 200	• Ultra-heavy load capacity optimal for machine tools • High vibration resistance and impact resistance due to improved damping characteristics • Thin, compact design, large radial load capacity • Superb in planar running accuracy	
83 to 105	145 to 200		
83 to 105	195 to 260		
83 to 105	195 to 260		
83 to 105	195 to 260		
83 to 105	195 to 260		
31 to 75	50 to 126	• Long service life, long-term maintenance-free operation • Low dust generation, low noise, acceptable running sound • Superbly high speed • Smooth motion in all mounting orientations • Ultra-heavy load capacity optimal for machine tools • Low profile, compact 4-way type • High vibration resistance and impact resistance due to improved damping characteristics	
31 to 75	50 to 126		
31 to 75	72 to 170		
31 to 75	72 to 170		
55 to 80	70 to 100	• Long service life, long-term maintenance-free operation • Low dust generation, low noise, acceptable running sound • Superbly high speed • Smooth motion in all mounting orientations • Ultra-heavy load capacity optimal for machine tools • 4-way type • High vibration resistance and impact resistance due to improved damping characteristics • Has dimensions almost the same as that of the full-ball type LM Guide model HSR, which is practically a global standard size	
55 to 80	70 to 100		
48 to 70	100 to 140		
48 to 70	100 to 140		
31 to 75	72 to 170	• Low dust generation, low noise, acceptable running sound • Superbly high speed • Smooth motion in all mounting orientations • Ultra-heavy load capacity optimal for machine tools • Low profile, compact 4-way type • High vibration resistance and impact resistance due to improved damping characteristics	
31 to 75	72 to 170		
31 to 75	50 to 126		
31 to 75	50 to 126		
83 to 105	195 to 260	• Ultra-heavy load capacity optimal for machine tools • High vibration resistance and impact resistance due to improved damping characteristics • Low-Profile compact design, 4-way equal load	
83 to 105	195 to 260		
83 to 105	195 to 260		
83 to 105	195 to 260		
83 to 105	145 to 200		
83 to 105	145 to 200		

Classification		Type		Specification Table*	Load capacity diagram	Basic load rating (kN)	
						Basic dynamic load rating	Basic static load rating
4-way equal load type	Caged Roller LM Guide - super ultra-heavy-load, high rigidity types		SRG-A, C	▶A1-402		11.3 to 131	25.8 to 266
			SRG-LA, LC	▶A1-402		26.7 to 278	63.8 to 599
			SRG-R, V	▶A1-408		11.3 to 131	25.8 to 266
			SRG-LR, LV	▶A1-408		26.7 to 601	63.8 to 1170
			SRN-C	▶A1-420		59.1 to 131	119 to 266
			SRN-LC	▶A1-420		76 to 278	165 to 599
			SRN-R	▶A1-422		59.1 to 131	119 to 266
			SRN-LR	▶A1-422		76 to 278	165 to 599
			SRW-LR	▶A1-430		115 to 601	256 to 1170
	Caged Ball LM Guide - heavy-load, high rigidity types		SHS-C	▶A1-96		14.2 to 205	24.2 to 320
			SHS-LC	▶A1-96		17.2 to 253	31.9 to 408
			SHS-V	▶A1-98		14.2 to 205	24.2 to 320
			SHS-LV	▶A1-98		17.2 to 253	31.9 to 408
			SHS-R	▶A1-100		14.2 to 128	24.2 to 197
			SHS-LR	▶A1-100		36.8 to 161	64.7 to 259

* For specification tables for each model, please see "A Product Descriptions."

External dimensions (mm)		Features	Major application
Height	Width		
24 to 70	47 to 140	• Long service life, long-term maintenance-free operation • Low noise, acceptable running sound • Superbly high speed • Smooth motion due to prevention of rollers from skewing • Ultra-heavy load capacity optimal for machine tools	• Machining center • NC lathe • Grinding machine • Five axis milling machine • Jig borer • Drilling machine • NC milling machine • Horizontal milling machine • Mold processing machine • Graphite working machine • Electric discharge machine • Wire-cut electric discharge machine
30 to 120	63 to 250		
24 to 80	34 to 100		
30 to 90	44 to 126		
44 to 63	100 to 140	• Long service life, long-term maintenance-free operation • Low noise, acceptable running sound • Superbly high speed • Smooth motion due to prevention of rollers from skewing • Ultra-heavy load capacity optimal for machine tools • Low center of gravity, ultra-high rigidity	
44 to 75	100 to 170		
44 to 63	70 to 100		
44 to 75	70 to 126		
70 to 150	135 to 300		
24 to 90	47 to 170	• Long service life, long-term maintenance-free operation • Low dust generation, low noise, acceptable running sound • Superbly high speed • Smooth motion in all mounting orientations • Heavy load, high rigidity • Has dimensions almost the same as that of the full-ball type LM Guide model HSR, which is practically a global standard size • Superb capability of absorbing mounting error	• Machining center • NC lathe • XYZ axes of heavy cutting machine tools • Grinding head feeding axis of grinding machines • Components requiring a heavy moment and high accuracy • NC milling machine • Horizontal milling machine • Gantry five axis milling machine • Z axis of electric discharge machines • Wire-cut electric discharge machine • Car elevator • Food-related machine • Testing machine • Vehicle doors • Printed circuit board drilling machine • ATC • Construction equipment • Shield machine • Semiconductor/liquid crystal manufacturing equipment
24 to 90	47 to 170		
24 to 90	34 to 126		
24 to 90	34 to 126		
28 to 80	34 to 100		
28 to 80	34 to 100		

Classification		Type		Specification Table*	Load capacity diagram	Basic load rating (kN)	
						Basic dynamic load rating	Basic static load rating
4-way equal load type	Full-Complement Ball LM Guide - heavy-load, high rigidity types		HSR-A	▶A1-184	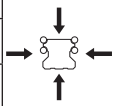	10.9 to 304	15.7 to 355
			HSR-M1A	▶A1-340		10.9 to 53.9	15.7 to 70.2
			HSR-LA	▶A1-184		23.9 to 367	35.8 to 464
			HSR-M1LA	▶A1-340		23.9 to 65	35.8 to 91.7
			HSR-CA	▶A1-194		19.8 to 304	27.4 to 355
			HSR-HA	▶A1-194		23.9 to 518	35.8 to 728
			HSR-B	▶A1-186		10.9 to 304	15.7 to 355
			HSR-M1B	▶A1-342		10.9 to 53.9	15.7 to 70.2
			HSR-LB	▶A1-186		23.9 to 367	35.8 to 464
			HSR-M1LB	▶A1-342		23.9 to 65	35.8 to 91.7
			HSR-CB	▶A1-196		19.8 to 304	27.4 to 355
			HSR-HB	▶A1-196		23.9 to 518	35.8 to 728
			HSR-R	▶A1-190		1.08 to 304	2.16 to 355
			HSR-M1R	▶A1-344		10.9 to 53.9	15.7 to 70.2
			HSR-LR	▶A1-190		23.9 to 367	35.8 to 464
			HSR-M1LR	▶A1-344		23.9 to 65	35.8 to 91.7
			HSR-HR	▶A1-198		441 to 518	540 to 728
	LM Guide for Medium-to-Low Vacuum		HSR-M1VV	▶A1-380		10.9	15.7
	Full-ball LM Guide - side mount types		HSR-YR	▶A1-192		10.9 to 195	15.7 to 228
			HSR-M1YR	▶A1-346		10.9 to 53.9	15.7 to 70.2
	Full-Complement LM Guides - special LM rail types		JR-A	▶A1-308	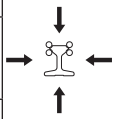	27.6 to 121	36.4 to 146
			JR-B	▶A1-308		27.6 to 121	36.4 to 146
			JR-R	▶A1-308		27.6 to 121	36.4 to 146

* For specification tables for each model, please see "A Product Descriptions."

	External dimensions (mm)		Features	Major application
	Height	Width		
	24 to 110	47 to 215	• Heavy load, high rigidity • Practically a global standard size • Superb capability of absorbing mounting error • Stainless steel type also available as standard • Type M1, achieving max service temperature of 150℃, also available • Type M2, with high corrosion resistance, also available (Basic dynamic load rating: 2.33 to 5.57 kN) (Basic static load rating: 2.03 to 5.16 kN)	• Machining center • NC lathe • XYZ axes of heavy cutting machine tools • Grinding head feeding axis of grinding machines • Components requiring a heavy moment and high accuracy • NC milling machine • Horizontal milling machine • Gantry five axis milling machine • Z axis of electric discharge machines • Wire-cut electric discharge machine • Car elevator • Food-related machine • Testing machine • Vehicle doors • Printed circuit board drilling machine • ATC • Construction equipment • Shield machine • Semiconductor/liquid crystal manufacturing equipment
	24 to 48	47 to 100		
	30 to 110	63 to 215		
	30 to 48	63 to 100		
	30 to 110	63 to 215		
	30 to 145	63 to 350		
	24 to 110	47 to 215		
	24 to 48	47 to 100		
	30 to 110	63 to 215		
	30 to 48	63 to 100		
	30 to 110	63 to 215		
	30 to 145	63 to 350		
	11 to 110	16 to 156		
	28 to 55	34 to 70		
	30 to 110	44 to 156		
	30 to 55	44 to 70		
	120 to 145	250 to 266		
	28	34	• Can be used in various environments at atmospheric pressure to vacuum (10^{-3} [Pa]) • Allows baking temperature of 200℃* at a maximum * If the baking temperature exceeds 100℃, multiply the basic load rating with the temperature coefficient.	• Medical equipment • Semiconductor/liquid crystal manufacturing equipment
	28 to 90	33.5 to 124.5	• Easy mounting and reduced mounting height when using 2 units opposed to each other since the side faces of the LM block have mounting holes • Heavy load, high rigidity • Superb capability of absorbing mounting error • Stainless steel type also available as standard • Type M1, achieving max service temperature of 150℃, also available	• Cross rails of gantry machine tools • Z axis of woodworking machines • Z axis of measuring instruments • Components opposed to each other
	28 to 55	33.5 to 69.5		
	61 to 114	70 to 140	• Since the central part of the LM rail is thinly structured, the LM Guide is capable of absorbing an error and achieving smooth motion if the parallelism between the two axes is poor • Since the LM rail has a highly rigid sectional shape, it can be used as a structural member	• Automated warehouse • Garage • Gantry robot • FMS traveling rail • Lift • Conveyance system • Welding machine • Lifter • Crane • Forklift • Coating machine • Shield machine • Stage setting
	61 to 114	70 to 140		
	65 to 124	48 to 100		

Classification		Type		Specification Table*	Load capacity diagram	Basic load rating (kN)	
						Basic dynamic load rating	Basic static load rating
4-way equal load type	Caged Ball Cross LM Guide		SCR	▶A1-166	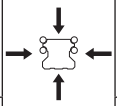	36.8 to 253	64.7 to 408
	Full-Complement LM Guide orthogonal type		CSR	▶A1-294		10.9 to 100	15.7 to 135
	Caged Ball LM Guide - wide, low center of gravity types		SHW-CA	▶A1-140	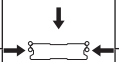	4.31 to 70.2	5.66 to 91.4
			SHW-CR, HR	▶A1-142		4.31 to 70.2	5.66 to 91.4
	Full-Complement Ball LM Guide - wide, low center of gravity types		HRW-CA	▶A1-240		5.53 to 80.3	9.1 to 109
			HRW-CR, LRM	▶A1-242		3.29 to 62.4	7.16 to 86.3
	Full-ball Straight - Curved Guide		HMG	▶A1-324	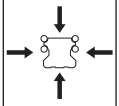	2.56 to 66.2	Straight section 4.23 to 66.7 Curved section 0.44 to 36.2
	Caged Ball LM Guides Finite stroke		EPF	▶A1-174	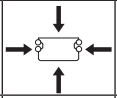	0.90 to 3.71	1.60 to 5.88
	Full-Complement Ball LM Guide - separate types		HR, HR-T	▶A1-262	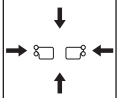	2.82 to 226	3.48 to 232
Interchangeable designs			GSR-T	▶A1-274	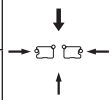	8.42 to 37	9.77 to 39.1
			GSR-V	▶A1-274		6.51 to 15.5	6.77 to 15.2
	Full-Complement Ball LM Guides - LM rail-rack intergrated type		GSR-R	▶A1-282	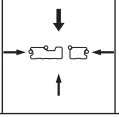	15.5 to 37	15.2 to 39.1

* For specification tables for each model, please see "A Product Descriptions."

External dimensions (mm)		Features	Major application
Height	Width		
70 to 180	88 to 226	• A compact XY structure is allowed due to an XY orthogonal, single-piece LM block • Since a saddle-less structure is allowed, the machine can be lightweighted and compactly designed • Long service life, long-term maintenance-free operation • Low dust generation, low noise, acceptable running sound • Superbly high speed	• Low center of gravity, precision XY table • NC lathe • Optical measuring instrument • Automatic lathe • Inspection equipment • Cartesian coordinate robot • Bonding machine • Wire-cut electric discharge machine • Hollow table • Printed circuit board assembler • Machine tool table • Electric discharge machine • XY axes of horizontal machining center
47 to 118	38.8 to 129.8	• A compact XY structure is allowed due to an XY orthogonal, single-piece LM block • Since a saddle-less structure is allowed, the machine can be lightweighted and compactly designed	
12 to 50	40 to 162	• Long service life, long-term maintenance-free operation • Low dust generation, low noise, acceptable running sound • Superbly high speed • Smooth motion in all mounting orientations • Wide, low center of gravity, space saving structure • Stainless steel type also available as standard	• Z axis of IC printed circuit board drilling machine • Z axis of small electric discharge machine • Loader • Machining center • NC lathe • Robot • Wire-cut electric discharge machine • APC • Semiconductor/liquid crystal manufacturing equipment • Measuring instrument • Wafer transfer equipment • Construction equipment • Railroad vehicle
12 to 50	30 to 130		
17 to 60	60 to 200	• 4-way equal load, thin and highly rigid • Wide, low center of gravity, space saving structure • Stainless steel type also available as standard	
12 to 50	30 to 130		
24 to 90	47 to 170	• Freedom of design • Cost reduction through simplified structure	• Large swivel base • Pendulum vehicle for railroad • Pantagraph • Control unit • Optical measuring machine • Tool grinder • X-Ray machine • CT scanner • Medical equipment • Stage setting • Car elevator • Amusement machine • Turntable • Tool changer
8 to 16	17 to 32	• Caged ball effect using a cage • Smooth movement with minimal rolling variation • 4-groove construction in a compact body	• Semiconductor manufacturing equipment • Medical equipment • Inspection equipment • Industrial machinery
8.5 to 60	18 to 125	• Low-Profile high rigidity, space saving structure • Interchangeable with Cross-Roller Guide • Preload can be adjusted • Stainless steel type also available as standard	• XYZ axes of electric discharge machine • Precision table • XZ axes of NC lathe • Assembly robot • Conveyance system • Machining center • Wire-cut electric discharge machine • Tool changer • Woodworking machine
20 to 38	32 to 68	• LM block and LM rail are both interchangeable • Preload can be adjusted • Capable of absorbing vertical level error and horizontal tolerance for parallelism	• Industrial robot • Various conveyance systems • Automated warehouse • Palette changer • ATC • Door closing device • Guide using an aluminum mold base • Welding machine • Coating machine • Car washing machine
20 to 30	32 to 50		
30 to 38	59.91 to 80.18	• LM rail-rack integrated design eliminates assembly and adjustment work • LM rail-rack integrated design enables a space-saving structure to be achieved • Capable of supporting long strokes	

Classification		Type		Specification Table*	Load capacity diagram	Basic load rating (kN)	
						Basic dynamic load rating	Basic static load rating
Miniature types	Caged Ball LM Guides		SRS-S	▶A1-152	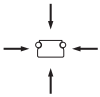	1.09 to 4.5	0.964 to 3.39
			SRS-M			0.439 to 16.5	0.468 to 20.2
			SRS-N			0.515 to 9.71	0.586 to 8.55
		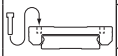	SRS-WS	▶A1-156		1.38 to 6.64	1.35 to 5.94
			SRS-WM			0.584 to 9.12	0.703 to 8.55
			SRS-WN			0.746 to 12.4	0.996 to 12.1
	Full-Complement Ball LM Guides		RSR-M	▶A1-252	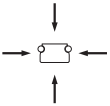	0.18 to 8.82	0.27 to 12.7
			RSR-M1V	▶A1-364		1.47 to 8.82	2.25 to 12.7
			RSR-N	▶A1-252		0.3 to 14.2	0.44 to 20.6
			RSR-M1N	▶A1-364		2.6 to 14.2	3.96 to 20.6
	Full-Complement Ball LM Guide - wide types	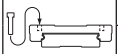	RSR-WM/WV	▶A1-252		0.25 to 6.66	0.47 to 9.8
			RSR-M1WV	▶A1-366		2.45 to 6.66	3.92 to 9.8
			RSR-WN	▶A1-252		0.39 to 9.91	0.75 to 14.9
			RSR-M1WN	▶A1-366		3.52 to 9.91	5.37 to 14.9
	Full Complement Ball LM Guide - orthogonal type		MX	▶A1-300		0.59 to 2.04	1.1 to 3.21
Circular arc types	Full-Complement Ball LM Guides		HCR	▶A1-316	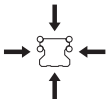	4.7 to 141	8.53 to 215
Self-aligning types	Full-Complement Ball LM Guides		NSR-TBC	▶A1-330	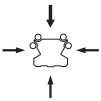	9.41 to 90.8	18.6 to 152

* For specification tables for each model, please see "A Product Descriptions."

	External dimensions (mm)		Features	Major application
	Height	Width		
	8 to 16	17 to 32	• Long service life, long-term maintenance-free operation • Low dust generation, low noise, acceptable running sound • Superbly high speed • Smooth motion in all mounting orientations • Stainless steel type also available as standard • Lightweight and compact	• IC/LSI manufacturing machine • Hard disc drive • Slide unit of OA equipment • Wafer transfer equipment • Printed circuit board assembly table • Medical equipment • Electronic components of electron microscope • Optical stage • Stepper • Plotting machine • Feed mechanism of IC bonding machine • Inspection equipment
	6 to 25	17 to 48		
	6 to 16	12 to 32		
	9 to 16	25 to 60		
	6.5 to 16	17 to 60		
	4 to 25	8 to 46	• Stainless steel type also available as standard • Long type with increased load capacity also offered as standard • Type M1, achieving max service temperature of 150°C, also available	• IC/LSI manufacturing machine • Hard disc drive • Slide unit of OA equipment • Wafer transfer equipment • Printed circuit board assembly table • Medical equipment • Electronic components of electron microscope • Optical stage • Stepper • Plotting machine • Feed mechanism of IC bonding machine • Inspection equipment
	10 to 25	20 to 46		
	4 to 25	8 to 46		
	10 to 25	20 to 46		
	4.5 to 16	12 to 60	• Stainless steel type also available as standard • Long type with increased load capacity also offered as standard • Type M1, achieving max service temperature of 150°C, also available	
	12 to 16	30 to 60		
	4.5 to 16	12 to 60		
	12 to 16	30 to 60		
	10 to 14.5	15.2 to 30.2	• A compact XY structure is allowed due to an XY orthogonal, single-piece LM block • Stainless steel type also available as standard	• IC/LSI manufacturing machine • Inspection equipment • Slide unit of OA equipment • Wafer transfer equipment • Feed mechanism of IC bonding machine • Printed circuit board assembly table • Medical equipment • Electronic components of electron microscope • Optical stage
	18 to 90	39 to 170	• Circular motion guide in a 4-way equal load design • Highly accurate circular motion without play • Allows an efficient design with the LM block placed in the loading point • Large circular motion easily achieved	• Large swivel base • Pendulum vehicle for railroad • Pantagraph • Control unit • Optical measuring machine • Tool grinder • X-Ray machine • CT scanner • Medical equipment • Stage setting • Car elevator • Amusement machine • Turntable • Tool changer
	40 to 105	70 to 175	• Can be used in rough mount due to self-aligning on the fit surface of the case • Preload can be adjusted • Can be mounted on a black steel sheet	• XY axes of ordinary industrial machinery • Various conveyance systems • Automated warehouse • Palette changer • Automatic coating machine • Various welding machines

Calculating the Applied Load

The LM Guide is capable of receiving loads and moments in all directions that are generated due to the mounting orientation, alignment, gravity center position of a traveling object, thrust position and cutting resistance.

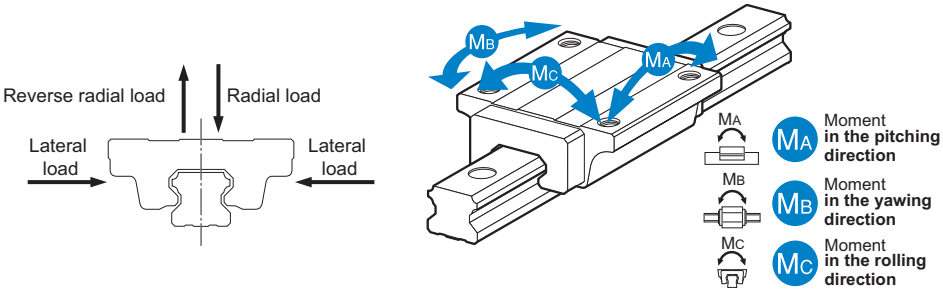

Fig.1 Directions of the Loads Applied on the LM Guide

Calculating an Applied Load

[Single-Axis Use]

● **Moment Equivalence**

When the installation space for the LM Guide is limited, you may have to use only one LM block, or double LM blocks closely contacting with each other. In such a setting, the load distribution is not uniform and, as a result, an excessive load is applied in localized areas (i.e., both ends) as shown in Fig.2. Continued use under such conditions may result in flaking in those areas, consequently shortening the service life. In such a case, calculate the actual load by multiplying the moment value by any one of the equivalent-moment factors specified in Table1 to Table6 A1-43.

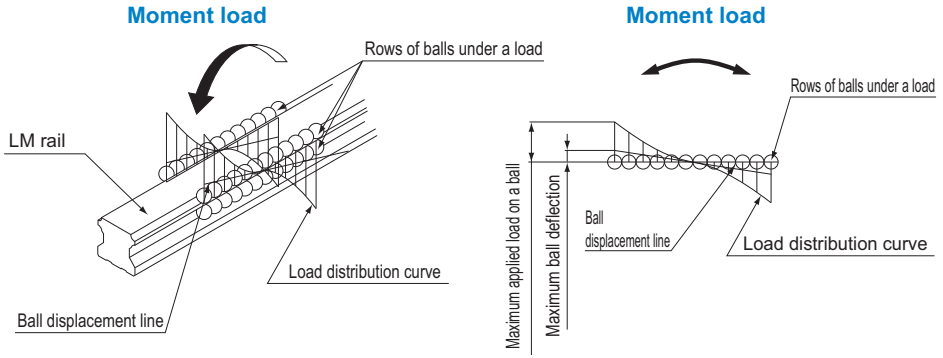

Fig.2 Ball Load when a Moment is Applied

An equivalent-load equation applicable when a moment acts on an LM Guide is shown below.

$$P = K \cdot M$$

P : Equivalent load per LM Guide (N)
K : Equivalent moment factor
M : Applied moment (N-mm)

● Equivalent Factor

Since the rated load is equivalent to the permissible moment, the equivalent factor to be multiplied when equalizing the M_A, M_B and M_C moments to the applied load per block is obtained by dividing the rated loads in the corresponding directions.

With those models other than 4-way equal load types, however, the load ratings in the 4 directions differ from each other. Therefore, the equivalent factor values for the M_A and M_C moments also differ depending on whether the direction is radial or reverse radial.

■Equivalent Factors for the M_A Moment

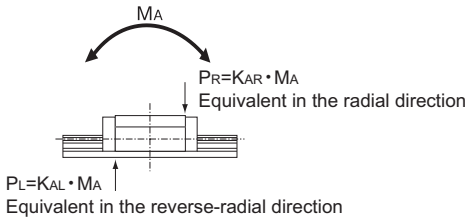

Fig.3 Equivalent Factors for the M_A Moment

Equivalent factors for the M_A Moment

- Equivalent factor in the radial direction $K_{AR}=\dfrac{C_0}{M_A}$
- Equivalent factor in the reverse radial direction $K_{AL}=\dfrac{C_{0L}}{M_A}$

$$\frac{C_0}{K_{AR}\cdot M_A}=\frac{C_{0L}}{K_{AL}\cdot M_A}=1$$

■Equivalent Factors for the M_B Moment

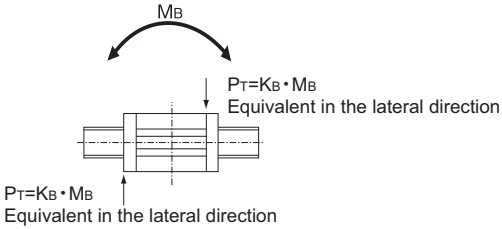

Fig.4 Equivalent Factors for the M_B Moment

Equivalent factors for the M_B Moment

- Equivalent factor in the lateral directions $K_B=\dfrac{C_{0T}}{M_B}$

$$\frac{C_{0T}}{K_B\cdot M_B}=1$$

■Equivalent Factors for the M_C Moment

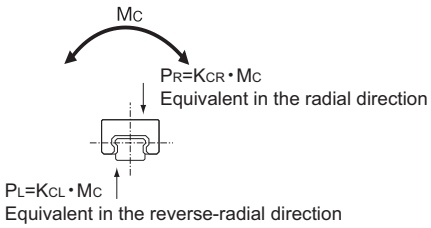

Fig.5 Equivalent Factors for the M_C Moment

Equivalent factors for the M_C Moment

- Equivalent factor in the radial direction $K_{CR}=\frac{C_0}{M_C}$
- Equivalent factor in the reverse radial direction $K_{CL}=\frac{C_{0L}}{M_C}$

$$\frac{C_0}{K_{CR}\cdot M_C}=\frac{C_{0L}}{K_{CL}\cdot M_C}=1$$

C_0	:	Basic static load rating (radial direction)	(N)
C_{0L}	:	Basic static load rating (reverse radial direction)	(N)
C_{0T}	:	Basic static load rating (lateral direction)	(N)
P_R	:	Calculated load (radial direction)	(N)
P_L	:	Calculated load (reverse radial direction)	(N)
P_T	:	Calculated load (lateral direction)	(N)

Example of calculation

When one LM block is used

Model No.: SSR20XV1

Gravitational acceleration g=9.8 (m/s^2)
Mass m=10 (kg)
ℓ_1=200 (mm)
ℓ_2=100 (mm)

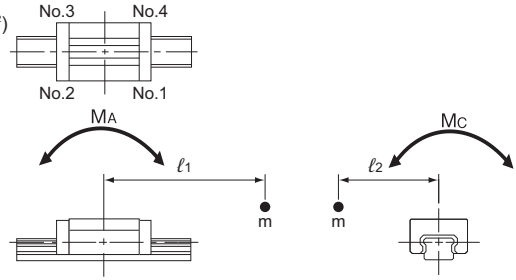

Fig.6 When One LM Block is Used

No.1 $P_1=mg+K_{AR1}\cdot mg\cdot\ell_1+K_{CR}\cdot mg\cdot\ell_2=98+0.275\times98\times200+0.129\times98\times100=6752$ (N)
No.2 $P_2=mg-K_{AL1}\cdot mg\cdot\ell_1+K_{CR}\cdot mg\cdot\ell_2=98-0.137\times98\times200+0.129\times98\times100=-1323$ (N)
No.3 $P_3=mg-K_{AL1}\cdot mg\cdot\ell_1-K_{CL}\cdot mg\cdot\ell_2=98-0.137\times98\times200-0.0644\times98\times100=-3218$ (N)
No.4 $P_4=mg+K_{AR1}\cdot mg\cdot\ell_1-K_{CL}\cdot mg\cdot\ell_2=98+0.275\times98\times200-0.0644\times98\times100=4857$ (N)

When two LM blocks are used in close contact with each other

Model No.: SVS25R2

Gravitational acceleration g=9.8 (m/s^2)
Mass m=5 (kg)
ℓ_1=200 (mm)
ℓ_2=150 (mm)

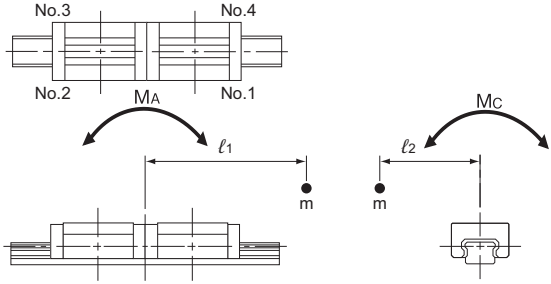

Fig.7 When Two LM Blocks are Used in Close Contact with Each Other

No.1 $P_1=\frac{mg}{2}+K_{AR2}\cdot mg\cdot\ell_1+K_{CR}\cdot\frac{mg\cdot\ell_2}{2}=\frac{49}{2}+0.0188\times49\times200+0.0814\times\frac{49\times150}{2}=507.9$ (N)

No.2 $P_2=\frac{mg}{2}-K_{AL2}\cdot mg\cdot\ell_1+K_{CR}\cdot\frac{mg\cdot\ell_2}{2}=\frac{49}{2}-0.0158\times49\times200+0.0814\times\frac{49\times150}{2}=168.8$ (N)

No.3 $P_3=\frac{mg}{2}-K_{AL2}\cdot mg\cdot\ell_1-K_{CL}\cdot\frac{mg\cdot\ell_2}{2}=\frac{49}{2}-0.0158\times49\times200-0.0684\times\frac{49\times150}{2}=-381.7$ (N)

No.4 $P_4=\frac{mg}{2}+K_{AR2}\cdot mg\cdot\ell_1-K_{CL}\cdot\frac{mg\cdot\ell_2}{2}=\frac{49}{2}+0.0188\times49\times200-0.0684\times\frac{49\times150}{2}=-42.6$ (N)

Note1) Since an LM Guide used in vertical installation receives only a moment load, there is no need to apply a load force (mg).

[Double-axis Use]

● **Setting Conditions**

Set the conditions needed to calculate the LM system's applied load and service life in hours.
The conditions consist of the following items.

(1) Mass: m (kg)
(2) Direction of the working load
(3) Position of the working point (e.g., center of gravity): ℓ_2, ℓ_3, h_1(mm)
(4) Thrust position: ℓ_4, h_2(mm)
(5) LM system arrangement: ℓ_0, ℓ_1(mm)
(No. of units and axes)
(6) Velocity diagram
Speed: V (mm/s)
Time constant: t_n (s)
Acceleration: α_n(mm/s^2)

$$(\alpha_n = \frac{V}{t_n})$$

(7) Duty cycle
Number of reciprocations per minute: N_1(min^{-1})
(8) Stroke length: ℓ_s(mm)
(9) Average speed: V_m(m/s)
(10) Required service life in hours: L_h(h)

Gravitational acceleration g=9.8 (m/s^2)

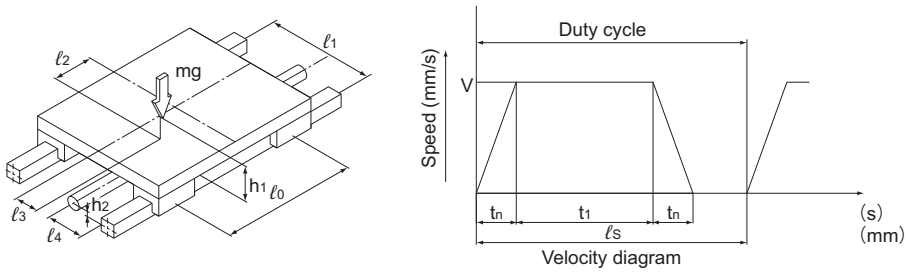

Fig.8 Condition

● Applied Load Equation

The load applied to the LM Guide varies with the external force, such as the position of the gravity center of an object, thrust position, inertia generated from acceleration/deceleration during start or stop, and cutting force.
In selecting an LM Guide, it is necessary to obtain the value of the applied load while taking into account these conditions.

Calculate the load applied to the LM Guide in each of the examples 1 to 10 shown below.

m	:	Mass	(kg)
ℓ_n	:	Distance	(mm)
F_n	:	External force	(N)
P_n	:	Applied load (radial/reverse radial direction)	(N)
P_{nT}	:	Applied load (lateral directions)	(N)
g	:	Gravitational acceleration ($g = 9.8 m/s^2$)	(m/s^2)
V	:	Speed	(m/s)
t_n	:	Time constant	(s)
α_n	:	Acceleration	(m/s^2)

$$(\alpha_n = \frac{V}{t_n})$$

[Example]

	Condition	Applied Load Equation
1	Horizontal mount (with the block traveling) Uniform motion or dwell 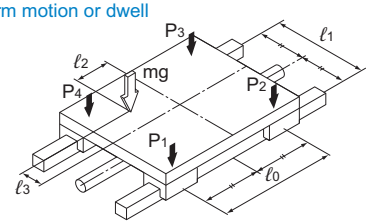 	$P_1 = \frac{mg}{4} + \frac{mg \cdot \ell_2}{2 \cdot \ell_0} - \frac{mg \cdot \ell_3}{2 \cdot \ell_1}$ $P_2 = \frac{mg}{4} - \frac{mg \cdot \ell_2}{2 \cdot \ell_0} - \frac{mg \cdot \ell_3}{2 \cdot \ell_1}$ $P_3 = \frac{mg}{4} - \frac{mg \cdot \ell_2}{2 \cdot \ell_0} + \frac{mg \cdot \ell_3}{2 \cdot \ell_1}$ $P_4 = \frac{mg}{4} + \frac{mg \cdot \ell_2}{2 \cdot \ell_0} + \frac{mg \cdot \ell_3}{2 \cdot \ell_1}$
2	Horizontal mount, overhung (with the block traveling) Uniform motion or dwell 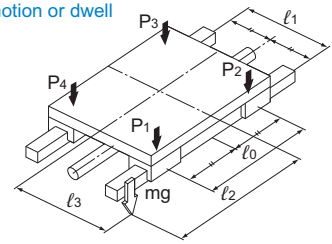 	$P_1 = \frac{mg}{4} + \frac{mg \cdot \ell_2}{2 \cdot \ell_0} + \frac{mg \cdot \ell_3}{2 \cdot \ell_1}$ $P_2 = \frac{mg}{4} - \frac{mg \cdot \ell_2}{2 \cdot \ell_0} + \frac{mg \cdot \ell_3}{2 \cdot \ell_1}$ $P_3 = \frac{mg}{4} - \frac{mg \cdot \ell_2}{2 \cdot \ell_0} - \frac{mg \cdot \ell_3}{2 \cdot \ell_1}$ $P_4 = \frac{mg}{4} + \frac{mg \cdot \ell_2}{2 \cdot \ell_0} - \frac{mg \cdot \ell_3}{2 \cdot \ell_1}$

Note) Load is positive in the direction of the arrow.

	Condition	Applied Load Equation
3	**Vertical mount** **Uniform motion or dwell** 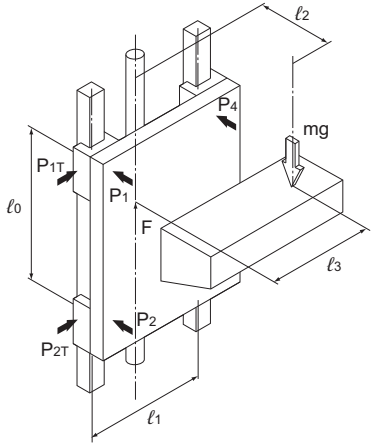 E.g.: Vertical axis of industrial robot, automatic coating machine, lifter	$P_1 = P_4 = -\frac{mg \cdot \ell_2}{2 \cdot \ell_0}$ $P_2 = P_3 = \frac{mg \cdot \ell_2}{2 \cdot \ell_0}$ $P_{1T} = P_{4T} = \frac{mg \cdot \ell_3}{2 \cdot \ell_0}$ $P_{2T} = P_{3T} = -\frac{mg \cdot \ell_3}{2 \cdot \ell_0}$
4	**Wall mount** **Uniform motion or dwell** 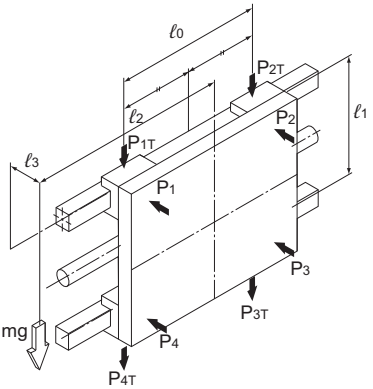 E.g.: Travel axis of cross-rail loader	$P_1 = P_2 = -\frac{mg \cdot \ell_3}{2 \cdot \ell_1}$ $P_3 = P_4 = \frac{mg \cdot \ell_3}{2 \cdot \ell_1}$ $P_{1T} = P_{4T} = \frac{mg}{4} + \frac{mg \cdot \ell_2}{2 \cdot \ell_0}$ $P_{2T} = P_{3T} = \frac{mg}{4} - \frac{mg \cdot \ell_2}{2 \cdot \ell_0}$

Note) Load is positive in the direction of the arrow.

	Condition	Applied Load Equation
5	**With the LM rails movable** **Horizontal mount** 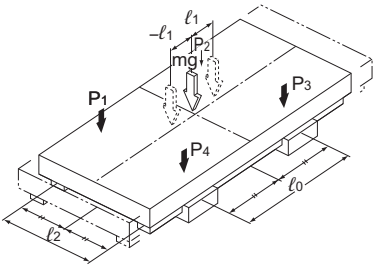 E.g.: XY table sliding fork	P_1 to P_4 (max) $= \frac{mg}{4} + \frac{mg \cdot \ell_1}{2 \cdot \ell_0}$ P_1 to P_4 (min) $= \frac{mg}{4} - \frac{mg \cdot \ell_1}{2 \cdot \ell_0}$
6	**Laterally tilt mount** 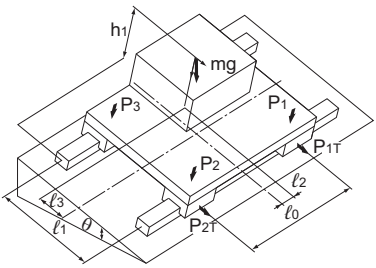 E.g.: NC lathe Carriage	$P_1 = + \frac{mg \cdot \cos\theta}{4} + \frac{mg \cdot \cos\theta \cdot \ell_2}{2 \cdot \ell_0} - \frac{mg \cdot \cos\theta \cdot \ell_3}{2 \cdot \ell_1} + \frac{mg \cdot \sin\theta \cdot h_1}{2 \cdot \ell_1}$ $P_{1T} = \frac{mg \cdot \sin\theta}{4} + \frac{mg \cdot \sin\theta \cdot \ell_2}{2 \cdot \ell_0}$ $P_2 = + \frac{mg \cdot \cos\theta}{4} - \frac{mg \cdot \cos\theta \cdot \ell_2}{2 \cdot \ell_0} - \frac{mg \cdot \cos\theta \cdot \ell_3}{2 \cdot \ell_1} + \frac{mg \cdot \sin\theta \cdot h_1}{2 \cdot \ell_1}$ $P_{2T} = \frac{mg \cdot \sin\theta}{4} - \frac{mg \cdot \sin\theta \cdot \ell_2}{2 \cdot \ell_0}$ $P_3 = + \frac{mg \cdot \cos\theta}{4} - \frac{mg \cdot \cos\theta \cdot \ell_2}{2 \cdot \ell_0} + \frac{mg \cdot \cos\theta \cdot \ell_3}{2 \cdot \ell_1} - \frac{mg \cdot \sin\theta \cdot h_1}{2 \cdot \ell_1}$ $P_{3T} = \frac{mg \cdot \sin\theta}{4} - \frac{mg \cdot \sin\theta \cdot \ell_2}{2 \cdot \ell_0}$ $P_4 = + \frac{mg \cdot \cos\theta}{4} + \frac{mg \cdot \cos\theta \cdot \ell_2}{2 \cdot \ell_0} + \frac{mg \cdot \cos\theta \cdot \ell_3}{2 \cdot \ell_1} - \frac{mg \cdot \sin\theta \cdot h_1}{2 \cdot \ell_1}$ $P_{4T} = \frac{mg \cdot \sin\theta}{4} + \frac{mg \cdot \sin\theta \cdot \ell_2}{2 \cdot \ell_0}$

Note) Load is positive in the direction of the arrow.

	Condition	Applied Load Equation
7	**Longitudinally tilt mount** 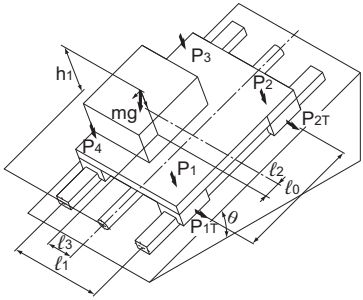 E.g.: NC lathe Tool rest	$P_1 = +\frac{mg\cdot\cos\theta}{4} + \frac{mg\cdot\cos\theta\cdot\ell_2}{2\cdot\ell_0} - \frac{mg\cdot\cos\theta\cdot\ell_3}{2\cdot\ell_1} + \frac{mg\cdot\sin\theta\cdot h_1}{2\cdot\ell_0}$ $P_{1T} = +\frac{mg\cdot\sin\theta\cdot\ell_3}{2\cdot\ell_0}$ $P_2 = +\frac{mg\cdot\cos\theta}{4} - \frac{mg\cdot\cos\theta\cdot\ell_2}{2\cdot\ell_0} - \frac{mg\cdot\cos\theta\cdot\ell_3}{2\cdot\ell_1} - \frac{mg\cdot\sin\theta\cdot h_1}{2\cdot\ell_0}$ $P_{2T} = -\frac{mg\cdot\sin\theta\cdot\ell_3}{2\cdot\ell_0}$ $P_3 = +\frac{mg\cdot\cos\theta}{4} - \frac{mg\cdot\cos\theta\cdot\ell_2}{2\cdot\ell_0} + \frac{mg\cdot\cos\theta\cdot\ell_3}{2\cdot\ell_1} - \frac{mg\cdot\sin\theta\cdot h_1}{2\cdot\ell_0}$ $P_{3T} = -\frac{mg\cdot\sin\theta\cdot\ell_3}{2\cdot\ell_0}$ $P_4 = +\frac{mg\cdot\cos\theta}{4} + \frac{mg\cdot\cos\theta\cdot\ell_2}{2\cdot\ell_0} + \frac{mg\cdot\cos\theta\cdot\ell_3}{2\cdot\ell_1} + \frac{mg\cdot\sin\theta\cdot h_1}{2\cdot\ell_0}$ $P_{4T} = +\frac{mg\cdot\sin\theta\cdot\ell_3}{2\cdot\ell_0}$
8	**Horizontal mount with inertia** 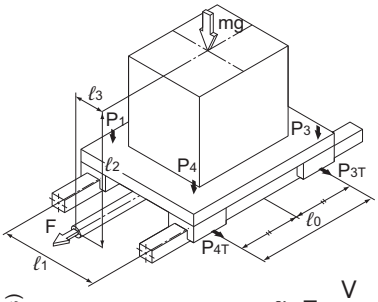 $\alpha_n = \frac{V}{t_n}$ 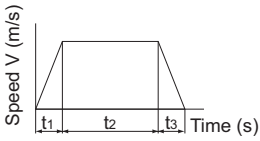 Velocity diagram E.g.: Conveyance truck	During acceleration $P_1 = P_4 = \frac{mg}{4} - \frac{m\cdot\alpha_1\cdot\ell_2}{2\cdot\ell_0}$ $P_2 = P_3 = \frac{mg}{4} + \frac{m\cdot\alpha_1\cdot\ell_2}{2\cdot\ell_0}$ $P_{1T} = P_{4T} = \frac{m\cdot\alpha_1\cdot\ell_3}{2\cdot\ell_0}$ $P_{2T} = P_{3T} = -\frac{m\cdot\alpha_1\cdot\ell_3}{2\cdot\ell_0}$ During uniform motion P_1 to $P_4 = \frac{mg}{4}$ During deceleration $P_1 = P_4 = \frac{mg}{4} + \frac{m\cdot\alpha_3\cdot\ell_2}{2\cdot\ell_0}$ $P_2 = P_3 = \frac{mg}{4} - \frac{m\cdot\alpha_3\cdot\ell_2}{2\cdot\ell_0}$ $P_{1T} = P_{4T} = -\frac{m\cdot\alpha_3\cdot\ell_3}{2\cdot\ell_0}$ $P_{2T} = P_{3T} = \frac{m\cdot\alpha_3\cdot\ell_3}{2\cdot\ell_0}$

Note) Load is positive in the direction of the arrow.

	Condition	Applied Load Equation
9	**Vertical mount with inertia** 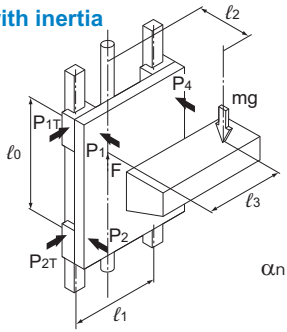 $\alpha_n = \frac{V}{t_n}$ 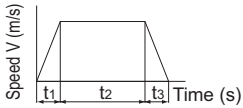 Velocity diagram E.g.: Conveyance lift	During acceleration $P_1 = P_4 = -\frac{m(g+\alpha_1)\ell_2}{2\cdot\ell_0}$ $P_2 = P_3 = \frac{m(g+\alpha_1)\ell_2}{2\cdot\ell_0}$ $P_{1T} = P_{4T} = \frac{m(g+\alpha_1)\ell_3}{2\cdot\ell_0}$ $P_{2T} = P_{3T} = -\frac{m(g+\alpha_1)\ell_3}{2\cdot\ell_0}$ During uniform motion $P_1 = P_4 = -\frac{mg\cdot\ell_2}{2\cdot\ell_0}$ $P_2 = P_3 = \frac{mg\cdot\ell_2}{2\cdot\ell_0}$ $P_{1T} = P_{4T} = \frac{mg\cdot\ell_3}{2\cdot\ell_0}$ $P_{2T} = P_{3T} = -\frac{mg\cdot\ell_3}{2\cdot\ell_0}$ During deceleration $P_1 = P_4 = -\frac{m(g-\alpha_3)\ell_2}{2\cdot\ell_0}$ $P_2 = P_3 = \frac{m(g-\alpha_3)\ell_2}{2\cdot\ell_0}$ $P_{1T} = P_{4T} = \frac{m(g-\alpha_3)\ell_3}{2\cdot\ell_0}$ $P_{2T} = P_{3T} = -\frac{m(g-\alpha_3)\ell_3}{2\cdot\ell_0}$
10	**Horizontal mount with external force** 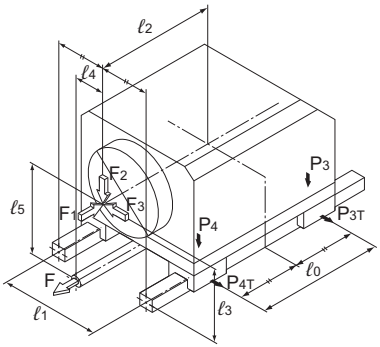 E.g.: Drill unit, Milling machine, Lathe, Machining center and other cutting machine	Under force F_1 $P_1 = P_4 = -\frac{F_1\cdot\ell_5}{2\cdot\ell_0}$ $P_2 = P_3 = \frac{F_1\cdot\ell_5}{2\cdot\ell_0}$ $P_{1T} = P_{4T} = \frac{F_1\cdot\ell_4}{2\cdot\ell_0}$ $P_{2T} = P_{3T} = -\frac{F_1\cdot\ell_4}{2\cdot\ell_0}$ Under force F_2 $P_1 = P_4 = \frac{F_2}{4} + \frac{F_2\cdot\ell_2}{2\cdot\ell_0}$ $P_2 = P_3 = \frac{F_2}{4} - \frac{F_2\cdot\ell_2}{2\cdot\ell_0}$ Under force F_3 $P_1 = P_2 = \frac{F_3\cdot\ell_3}{2\cdot\ell_1}$ $P_3 = P_4 = -\frac{F_3\cdot\ell_3}{2\cdot\ell_1}$ $P_{1T} = P_{4T} = -\frac{F_3}{4} - \frac{F_3\cdot\ell_2}{2\cdot\ell_0}$ $P_{2T} = P_{3T} = -\frac{F_3}{4} + \frac{F_3\cdot\ell_2}{2\cdot\ell_0}$

Note) Load is positive in the direction of the arrow.

Calculating the Equivalent Load

Rated Load of an LM Guide in Each Direction

The LM Guide is categorized into roughly two types: the 4-way equal load type, which has the same rated load in the radial, reverse radial and lateral directions, and the radial type, which has a large rated load in the radial direction. With the radial type LM Guide, the rated load in the radial direction is different from that in the reverse-radial and lateral directions. The basic load rating in the radial direction is indicated in the specification table. The values in the reverse-radial and lateral directions are obtained from Table7 on A1-58.

[Rated Loads in All Directions]

Type	Load Distribution Curve
4-way Equal Load Type 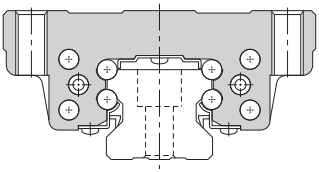	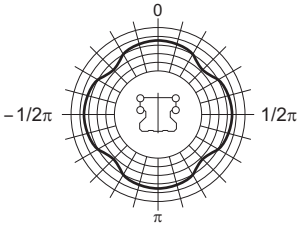
Radial Type 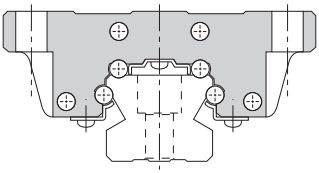	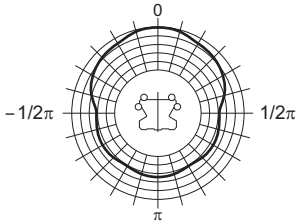

[Equivalent Load P_E]

The LM Guide can bear loads and moments in all directions, including a radial load (PR), reverse radial load (PL) and lateral loads (PT), simultaneously.

When two or more loads (e.g., radial load and lateral load) are simultaneously applied to the LM Guide, the service life and the static safety factor are calculated using equivalent load values obtained by converting all the loads into radial load or reverse-radial load.

[Equivalent Load Equation]

When the LM block of the LM Guide receives loads simultaneously in the radial and lateral directions, or the reverse radial and lateral directions, the equivalent load is obtained from the equation below.

$$P_E = X \cdot P_{R(L)} + Y \cdot P_T$$

P_E	:	Equivalent load ·Radial direction ·Reverse radial direction	(N)
P_L	:	Reverse radial load	(N)
P_T	:	Lateral load	(N)
X,Y	:	Equivalent factor (see Table8 on A1-60)	

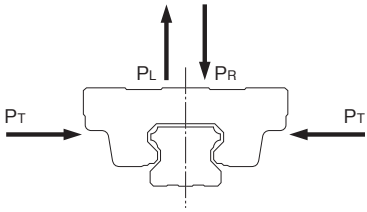

Fig.9 Equivalent of Load of the LM Guide

Calculating the Static Safety Factor

To calculate a load applied to the LM Guide, the average load required for calculating the service life and the maximum load needed for calculating the static safety factor must be obtained first. In a system subject to frequent starts and stops, placed under cutting forces or under a large moment caused by an overhang load, an excessively large load may apply to the LM Guide. When selecting a model number, make sure that the desired model is capable of receiving the required maximum load (whether stationary or in motion). Table1 shows reference values for the static safety factor.

Table1 Reference Values for the Static Safety Factor (f_S)

Machine using the LM Guide	Load conditions	Lower limit of f_S
General industrial machinery	Without vibration or impact	1.0 to 3.5
	With vibration or impact	2.0 to 5.0
Machine tool	Without vibration or impact	1.0 to 4.0
	With vibration or impact	2.5 to 7.0

When the radial load is large	$\frac{f_H \cdot f_T \cdot f_C \cdot C_0}{P_R} \geqq f_S$
When the reverse radial load is large	$\frac{f_H \cdot f_T \cdot f_C \cdot C_{0L}}{P_L} \geqq f_S$
When the lateral loads are large	$\frac{f_H \cdot f_T \cdot f_C \cdot C_{0T}}{P_T} \geqq f_S$

f_S : Static safety factor
C_0 : Basic static load rating (radial direction) (N)
C_{0L} : Basic static load rating (reverse-radial direction) (N)
C_{0T} : Basic static load rating (lateral direction) (N)
P_R : Calculated load (radial direction) (N)
P_L : Calculated load (reverse-radial direction) (N)
P_T : Calculated load (lateral direction) (N)
f_H : Hardness factor (see Fig.10 on B1-75)
f_T : Temperature factor (see Fig.11 on B1-75)
f_C : Contact factor (see Table2 on B1-75)

Calculating the Average Load

In cases where the load applied to each LM block fluctuates under different conditions, such as an industrial robot holding a work with its arm as it advances and receding with its arm empty, and a machine tool handling various workpieces, it is necessary to calculate the service life of the LM Block while taking into account such fluctuating loading conditions.
The average load (P_m) is the load under which the service life of the LM Guide is equivalent to that under varying loads applied to the LM blocks.

$$P_m = \sqrt[i]{\frac{1}{L} \cdot \sum_{n=1}^{n} (P_n^{\,i} \cdot L_n)}$$

P_m	: Average Load	(N)
P_n	: Varying load	(N)
L	: Total travel distance	(mm)
L_n	: Distance traveled under load P_n	(mm)
i	: Constant determined by rolling element	

Note) The above equation or the equation (1) below applies when the rolling elements are balls.

(1) When the load fluctuates stepwise

LM Guide Using Balls (i=3)

$$P_m = \sqrt[3]{\frac{1}{L} (P_1^{\,3} \cdot L_1 + P_2^{\,3} \cdot L_2 \cdots\cdots + P_n^{\,3} \cdot L_n)} \quad \cdots\cdots\cdots\cdots (1)$$

P_m	: Average load	(N)
P_n	: Varying load	(N)
L	: Total travel distance	(mm)
L_n	: Distance traveled under P_n	(mm)

LM Guide Using Rollers ($i = \frac{10}{3}$)

$$P_m = \sqrt[\frac{10}{3}]{\frac{1}{L} (P_1^{\frac{10}{3}} \cdot L_1 + P_2^{\frac{10}{3}} \cdot L_2 \cdots\cdots + P_n^{\frac{10}{3}} \cdot L_n)} \quad \cdots\cdots\cdots\cdots (2)$$

P_m	: Average Load	(N)
P_n	: Varying load	(N)
L	: Total travel distance	(mm)
L_n	: Distance traveled under P_n	(mm)

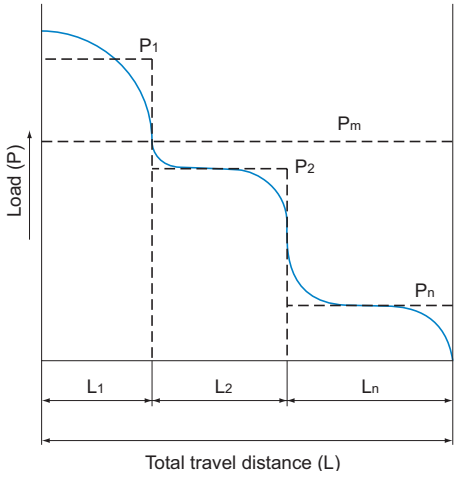

(2) When the load fluctuates monotonically

$$P_m \fallingdotseq \frac{1}{3}(P_{min} + 2 \cdot P_{max}) \quad \cdots\cdots\cdots\cdots (3)$$

P_{min} : Minimum load (N)
P_{max} : Maximum load (N)

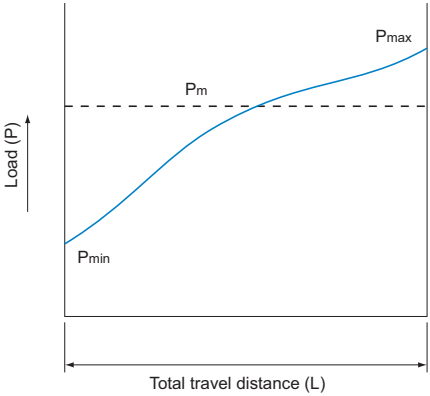

(3) When the load fluctuates sinusoidally

(a) $P_m \fallingdotseq 0.65P_{max}$ ·····(4)

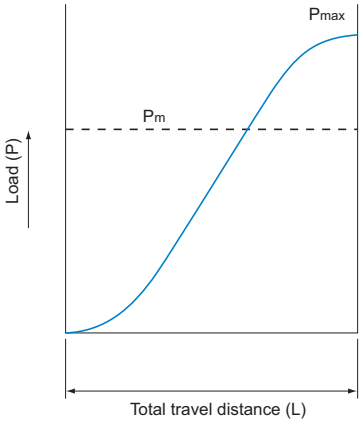

(b) $P_m \fallingdotseq 0.75P_{max}$ ·····(5)

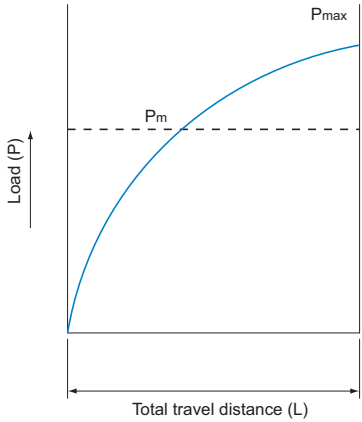

Example of Calculating the Average Load (1)
- with Horizontal Mount and Acceleration/Deceleration Considered -

[Conditions]

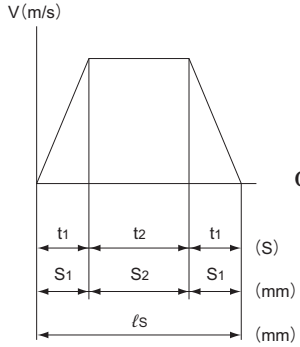

$$\alpha_1 = \frac{v}{t_1} \ (m/s^2)$$

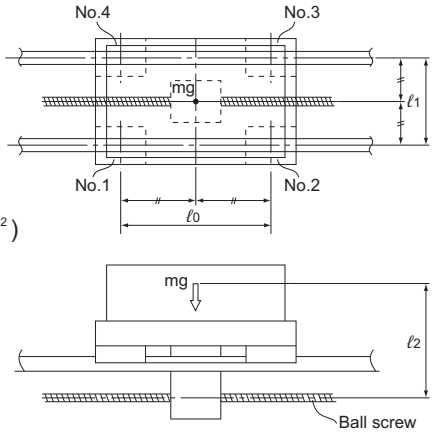

[Load Applied to the LM Block]

●During uniform motion

$$P_1 = +\frac{mg}{4}$$

$$P_2 = +\frac{mg}{4}$$

$$P_3 = +\frac{mg}{4}$$

$$P_4 = +\frac{mg}{4}$$

●During acceleration

$$Pa_1 = P_1 + \frac{m \cdot \alpha_1 \cdot \ell_2}{2 \cdot \ell_0}$$

$$Pa_2 = P_2 - \frac{m \cdot \alpha_1 \cdot \ell_2}{2 \cdot \ell_0}$$

$$Pa_3 = P_3 - \frac{m \cdot \alpha_1 \cdot \ell_2}{2 \cdot \ell_0}$$

$$Pa_4 = P_4 + \frac{m \cdot \alpha_1 \cdot \ell_2}{2 \cdot \ell_0}$$

●During deceleration

$$Pd_1 = P_1 - \frac{m \cdot \alpha_1 \cdot \ell_2}{2 \cdot \ell_0}$$

$$Pd_2 = P_2 + \frac{m \cdot \alpha_1 \cdot \ell_2}{2 \cdot \ell_0}$$

$$Pd_3 = P_3 + \frac{m \cdot \alpha_1 \cdot \ell_2}{2 \cdot \ell_0}$$

$$Pd_4 = P_4 - \frac{m \cdot \alpha_1 \cdot \ell_2}{2 \cdot \ell_0}$$

[Average load]

$$P_{m1} = \sqrt[3]{\frac{1}{\ell_s}\left(Pa_1^3 \cdot s_1 + P_1^3 \cdot s_2 + Pd_1^3 \cdot s_3\right)}$$

$$P_{m2} = \sqrt[3]{\frac{1}{\ell_s}\left(Pa_2^3 \cdot s_1 + P_2^3 \cdot s_2 + Pd_2^3 \cdot s_3\right)}$$

$$P_{m3} = \sqrt[3]{\frac{1}{\ell_s}\left(Pa_3^3 \cdot s_1 + P_3^3 \cdot s_2 + Pd_3^3 \cdot s_3\right)}$$

$$P_{m4} = \sqrt[3]{\frac{1}{\ell_s}\left(Pa_4^3 \cdot s_1 + P_4^3 \cdot s_2 + Pd_4^3 \cdot s_3\right)}$$

Note) Pa_n and Pd_n represent loads applied to each LM block. The suffix "n" indicates the block number in the diagram above.

Example of Calculating the Average Load (2) - When the Rails are Movable

[Conditions]

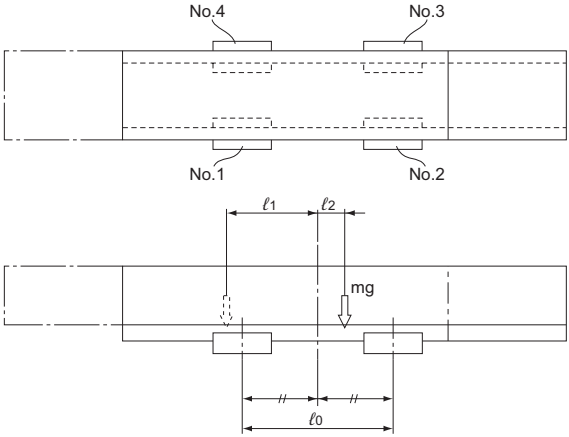

[Load Applied to the LM Block]

●At the left of the arm

$$P_{\ell 1} = + \frac{mg}{4} + \frac{mg \cdot \ell_1}{2 \cdot \ell_0}$$

$$P_{\ell 2} = + \frac{mg}{4} - \frac{mg \cdot \ell_1}{2 \cdot \ell_0}$$

$$P_{\ell 3} = + \frac{mg}{4} - \frac{mg \cdot \ell_1}{2 \cdot \ell_0}$$

$$P_{\ell 4} = + \frac{mg}{4} + \frac{mg \cdot \ell_1}{2 \cdot \ell_0}$$

●At the right of the arm

$$P_{r1} = + \frac{mg}{4} - \frac{mg \cdot \ell_2}{2 \cdot \ell_0}$$

$$P_{r2} = + \frac{mg}{4} + \frac{mg \cdot \ell_2}{2 \cdot \ell_0}$$

$$P_{r3} = + \frac{mg}{4} + \frac{mg \cdot \ell_2}{2 \cdot \ell_0}$$

$$P_{r4} = + \frac{mg}{4} - \frac{mg \cdot \ell_2}{2 \cdot \ell_0}$$

[Average load]

$$P_{m1} = \frac{1}{3} (2 \cdot |P_{\ell 1}| + |P_{r1}|)$$

$$P_{m2} = \frac{1}{3} (2 \cdot |P_{\ell 2}| + |P_{r2}|)$$

$$P_{m3} = \frac{1}{3} (2 \cdot |P_{\ell 3}| + |P_{r3}|)$$

$$P_{m4} = \frac{1}{3} (2 \cdot |P_{\ell 4}| + |P_{r4}|)$$

Note) $P_{\ell n}$ and P_{rn} represent loads applied to each LM block. The suffix "n" indicates the block number in the diagram above.

Calculating the Nominal Life

The service life of an LM Guide is subject to variations even under the same operational conditions. Therefore, it is necessary to use the nominal life defined below as a reference value for obtaining the service life of the LM Guide. The nominal life means the total travel distance that 90% of a group of units of the same LM Guide model can achieve without flaking (scale-like pieces on the metal surface) after individually running under the same conditions.

Nominal Life Equation for an LM Guide Using Balls

$$L = \left(\frac{f_H \cdot f_T \cdot f_C}{f_W} \cdot \frac{C}{P_C} \right)^3 \times 50$$

L	: Nominal life	(km)
C	: Basic dynamic load rating	(N)
P_C	: Calculated load	(N)
f_H	: Hardness factor (see Fig.10 on B1-75)	
f_T	: Temperature factor (see Fig.11 on B1-75)	
f_C	: Contact factor (see Table2 on B1-75)	
f_W	: Load factor (see Table3 on B1-76)	

Nominal Life Equation for the Oil-Free LM Guide

$$L = \left(\frac{F_0}{f_W \cdot P_C} \right)^{1.57} \times 50$$

L	: Nominal life	(km)
F_0	: Permissible load	(N)
P_C	: Calculated load	(N)
f_W	: Load factor (see Table3 on B1-76)	

Note) The life here means the service of life of the S film based on wear.
Since the service life of the S film may vary according to the environment or the operating conditions, be sure to evaluate and validate the life under the service conditions and operating conditions at the customer.

Nominal Life Equation for an LM Guide Using Rollers

$$L = \left(\frac{f_H \cdot f_T \cdot f_C}{f_W} \cdot \frac{C}{P_C} \right)^{\frac{10}{3}} \times 100$$

L : Nominal life (km)
C : Basic dynamic load rating (N)
P_C : Calculated load (N)
f_H : Hardness factor (see Fig.10 on B1-75)
f_T : Temperature factor (see Fig.11 on B1-75)
f_C : Contact factor (see Table2 on B1-75)
f_W : Load factor (see Table3 on B1-76)

Once the nominal life (L) has been obtained, the service life time can be obtained using the following equation if the stroke length and the number reciprocations are constant.

$$L_h = \frac{L \times 10^6}{2 \times \ell_s \times n_1 \times 60}$$

L_h : Service life time (h)
ℓ_s : Stroke length (mm)
n_1 : Number of reciprocations per minute (min^{-1})

[f_H: Hardness Factor]

To ensure the achievement of the optimum load capacity of the LM Guide, the raceway hardness must be between 58 and 64 HRC.

If the hardness is lower than this range, the basic dynamic load rating and the basic static load rating decrease. Therefore, it is necessary to multiply each rating by the respective hardness factor (f_H).

Since the LM Guide has sufficient hardness, the f_H value for the LM Guide is normally 1.0 unless otherwise specified.

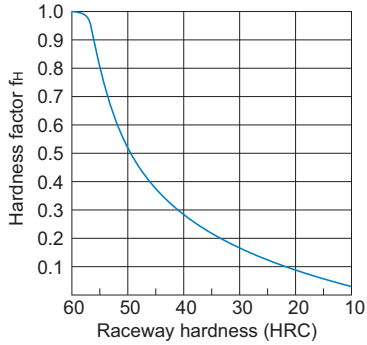

Fig.10 Hardness Factor (f_H)

[f_T:Temperature Factor]

If the temperature of the environment surrounding the operating LM Guide exceeds 100℃, take into account the adverse effect of the high temperature and multiply the basic load ratings by the temperature factor indicated in Fig.11.

In addition, the selected LM Guide must also be of a high temperature type.

Note) LM guides not designed to withstand high temperatures should be used at 80°C or less.Please contact THK if application requirements exceed 80°C.

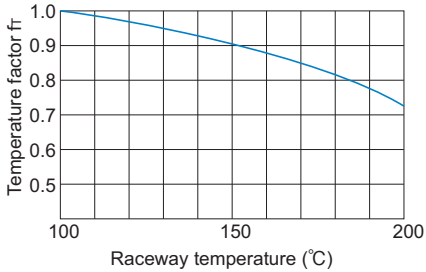

Fig.11 Temperature Factor (f_T)

[f_C: Contact Factor]

When multiple LM blocks are used in close contact with each other, it is difficult to achieve uniform load distribution due to moment loads and mounting-surface accuracy. When using multiple blocks in close contact with each other, multiply the basic load rating (C or C_0) by the corresponding contact factor indicated in Table2.

Note) If uneven load distribution is expected in a large machine, take into account the respective contact factor indicated in Table2.

Table2 Contact Factor (f_C)

Number of blocks used in close contact	Contact factor f_C
2	0.81
3	0.72
4	0.66
5	0.61
6 or greater	0.6
Normal use	1

[f_W: Load Factor]

In general, reciprocating machines tend to involve vibrations or impact during operation. It is extremely difficult to accurately determine vibrations generated during high-speed operation and impact during frequent start and stop. Therefore, where the effects of speed and vibration are estimated to be significant, divide the basic dynamic load rating (C) by a load factor selected from Table3, which contains empirically obtained data.

Table3 Load Factor (f_W)

Vibrations/ impact	Speed (V)	f_W
Faint	Very low V≦0.25m/s	1 to 1.2
Weak	Slow 0.25<V≦1m/s	1.2 to 1.5
Medium	Medium 1<V≦2m/s	1.5 to 2
Strong	High V>2m/s	2 to 3.5

Example of Calculating the Nominal Life (1) - with Horizontal Mount and High-speed Acceleration

[Conditions]

Model No. : HSR35LA2SS+2500LP-Ⅱ
(basic dynamic load rating: C =65.0 kN)
(basic static load rating: C_0=91.7 kN)

Mass : m_1 =800 kg
m_2 =500 kg

Speed : V =0.5 m/s

Time : t_1 =0.05 s
t_2 =2.8 s
t_3 =0.15 s

Acceleration : α_1 =10 m/s^2
α_3 =3.333 m/s^2

Stroke : ℓ_S =1450 mm

Distance: ℓ_0=600 mm
ℓ_1=400 mm
ℓ_2=120 mm
ℓ_3=50 mm
ℓ_4=200 mm
ℓ_5=350 mm

Gravitational acceleration g=9.8 (m/s^2)

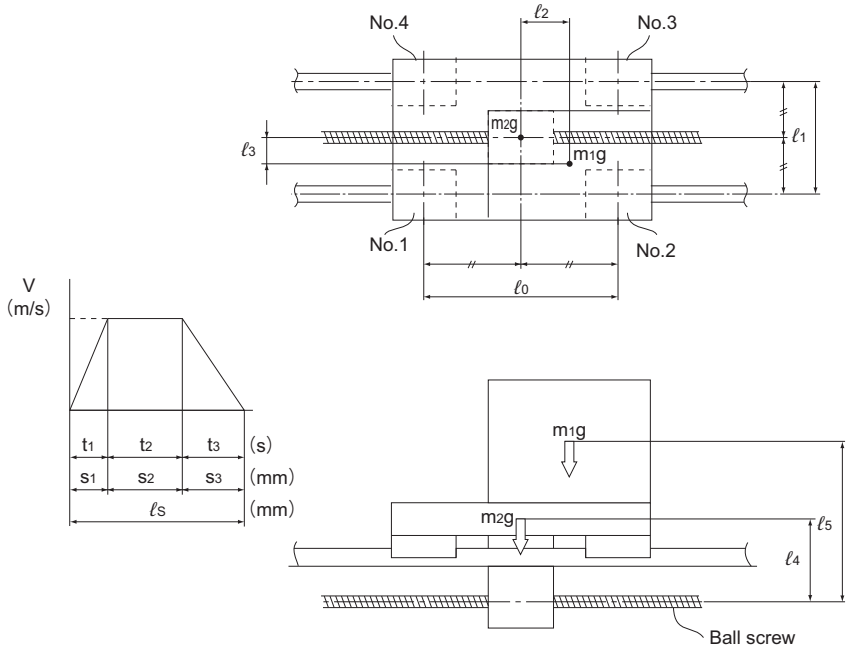

Fig.12 Condition

[Load Applied to the LM Block]
Calculate the load applied to each LM block.

● During uniform motion

■Applied load in the radial direction P_n

$$P_1 = +\frac{m_1 g}{4} - \frac{m_1 g \cdot \ell_2}{2 \cdot \ell_0} + \frac{m_1 g \cdot \ell_3}{2 \cdot \ell_1} + \frac{m_2 g}{4} = +2891\text{N}$$

$$P_2 = +\frac{m_1 g}{4} + \frac{m_1 g \cdot \ell_2}{2 \cdot \ell_0} + \frac{m_1 g \cdot \ell_3}{2 \cdot \ell_1} + \frac{m_2 g}{4} = +4459\text{N}$$

$$P_3 = +\frac{m_1 g}{4} + \frac{m_1 g \cdot \ell_2}{2 \cdot \ell_0} - \frac{m_1 g \cdot \ell_3}{2 \cdot \ell_1} + \frac{m_2 g}{4} = +3479\text{N}$$

$$P_4 = +\frac{m_1 g}{4} - \frac{m_1 g \cdot \ell_2}{2 \cdot \ell_0} - \frac{m_1 g \cdot \ell_3}{2 \cdot \ell_1} + \frac{m_2 g}{4} = +1911\text{N}$$

● During leftward acceleration

■Applied load in the radial direction $P\ell a_n$

$$P\ell a_1 = P_1 - \frac{m_1 \cdot \alpha_1 \cdot \ell_5}{2 \cdot \ell_0} - \frac{m_2 \cdot \alpha_1 \cdot \ell_4}{2 \cdot \ell_0} = -\ 275.6\ \text{N}$$

$$P\ell a_2 = P_2 + \frac{m_1 \cdot \alpha_1 \cdot \ell_5}{2 \cdot \ell_0} + \frac{m_2 \cdot \alpha_1 \cdot \ell_4}{2 \cdot \ell_0} = +\ 7625.6\ \text{N}$$

$$P\ell a_3 = P_3 + \frac{m_1 \cdot \alpha_1 \cdot \ell_5}{2 \cdot \ell_0} + \frac{m_2 \cdot \alpha_1 \cdot \ell_4}{2 \cdot \ell_0} = +\ 6645.6\ \text{N}$$

$$P\ell a_4 = P_4 - \frac{m_1 \cdot \alpha_1 \cdot \ell_5}{2 \cdot \ell_0} - \frac{m_2 \cdot \alpha_1 \cdot \ell_4}{2 \cdot \ell_0} = -\ 1255.6\ \text{N}$$

■Applied load in the lateral direction $Pt\ell a_n$

$$Pt\ell a_1 = -\frac{m_1 \cdot \alpha_1 \cdot \ell_3}{2 \cdot \ell_0} = -\ 333.3\text{N}$$

$$Pt\ell a_2 = +\frac{m_1 \cdot \alpha_1 \cdot \ell_3}{2 \cdot \ell_0} = +\ 333.3\text{N}$$

$$Pt\ell a_3 = +\frac{m_1 \cdot \alpha_1 \cdot \ell_3}{2 \cdot \ell_0} = +\ 333.3\text{N}$$

$$Pt\ell a_4 = -\frac{m_1 \cdot \alpha_1 \cdot \ell_3}{2 \cdot \ell_0} = -\ 333.3\text{N}$$

● During leftward deceleration

■Applied load in the radial direction $P\ell d_n$

$$P\ell d_1 = P_1 + \frac{m_1 \cdot \alpha_3 \cdot \ell_5}{2 \cdot \ell_0} + \frac{m_2 \cdot \alpha_3 \cdot \ell_4}{2 \cdot \ell_0} = +\ 3946.6\text{N}$$

$$P\ell d_2 = P_2 - \frac{m_1 \cdot \alpha_3 \cdot \ell_5}{2 \cdot \ell_0} - \frac{m_2 \cdot \alpha_3 \cdot \ell_4}{2 \cdot \ell_0} = +\ 3403.4\text{N}$$

$$P\ell d_3 = P_3 - \frac{m_1 \cdot \alpha_3 \cdot \ell_5}{2 \cdot \ell_0} - \frac{m_2 \cdot \alpha_3 \cdot \ell_4}{2 \cdot \ell_0} = +\ 2423.4\text{N}$$

$$P\ell d_4 = P_4 + \frac{m_1 \cdot \alpha_3 \cdot \ell_5}{2 \cdot \ell_0} + \frac{m_2 \cdot \alpha_3 \cdot \ell_4}{2 \cdot \ell_0} = +\ 2966.6\text{N}$$

■Applied load in the lateral direction $Pt\ell d_n$

$$Pt\ell d_1 = + \frac{m_1 \cdot \alpha_3 \cdot \ell_3}{2 \cdot \ell_0} = +111.1\,N$$

$$Pt\ell d_2 = - \frac{m_1 \cdot \alpha_3 \cdot \ell_3}{2 \cdot \ell_0} = -111.1\,N$$

$$Pt\ell d_3 = - \frac{m_1 \cdot \alpha_3 \cdot \ell_3}{2 \cdot \ell_0} = -111.1\,N$$

$$Pt\ell d_4 = + \frac{m_1 \cdot \alpha_3 \cdot \ell_3}{2 \cdot \ell_0} = +111.1\,N$$

● During rightward acceleration

■Applied load in the radial direction Pra_n

$$Pra_1 = P_1 + \frac{m_1 \cdot \alpha_1 \cdot \ell_5}{2 \cdot \ell_0} + \frac{m_2 \cdot \alpha_1 \cdot \ell_4}{2 \cdot \ell_0} = +6057.6\,N$$

$$Pra_2 = P_2 - \frac{m_1 \cdot \alpha_1 \cdot \ell_5}{2 \cdot \ell_0} - \frac{m_2 \cdot \alpha_1 \cdot \ell_4}{2 \cdot \ell_0} = +1292.4\,N$$

$$Pra_3 = P_3 - \frac{m_1 \cdot \alpha_1 \cdot \ell_5}{2 \cdot \ell_0} - \frac{m_2 \cdot \alpha_1 \cdot \ell_4}{2 \cdot \ell_0} = +312.4\,N$$

$$Pra_4 = P_4 + \frac{m_1 \cdot \alpha_1 \cdot \ell_5}{2 \cdot \ell_0} + \frac{m_2 \cdot \alpha_1 \cdot \ell_4}{2 \cdot \ell_0} = +5077.6\,N$$

■Applied load in the lateral direction $Ptra_n$

$$Ptra_1 = + \frac{m_1 \cdot \alpha_1 \cdot \ell_3}{2 \cdot \ell_0} = +333.3\,N$$

$$Ptra_2 = - \frac{m_1 \cdot \alpha_1 \cdot \ell_3}{2 \cdot \ell_0} = -333.3\,N$$

$$Ptra_3 = - \frac{m_1 \cdot \alpha_1 \cdot \ell_3}{2 \cdot \ell_0} = -333.3\,N$$

$$Ptra_4 = + \frac{m_1 \cdot \alpha_1 \cdot \ell_3}{2 \cdot \ell_0} = +333.3\,N$$

● During rightward deceleration

■Applied load in the radial direction Prd_n

$$Prd_1 = P_1 - \frac{m_1 \cdot \alpha_3 \cdot \ell_5}{2 \cdot \ell_0} - \frac{m_2 \cdot \alpha_3 \cdot \ell_4}{2 \cdot \ell_0} = +1835.4\,N$$

$$Prd_2 = P_2 + \frac{m_1 \cdot \alpha_3 \cdot \ell_5}{2 \cdot \ell_0} + \frac{m_2 \cdot \alpha_3 \cdot \ell_4}{2 \cdot \ell_0} = +5514.6\,N$$

$$Prd_3 = P_3 + \frac{m_1 \cdot \alpha_3 \cdot \ell_5}{2 \cdot \ell_0} + \frac{m_2 \cdot \alpha_3 \cdot \ell_4}{2 \cdot \ell_0} = +4534.6\,N$$

$$Prd_4 = P_4 - \frac{m_1 \cdot \alpha_3 \cdot \ell_5}{2 \cdot \ell_0} - \frac{m_2 \cdot \alpha_3 \cdot \ell_4}{2 \cdot \ell_0} = +855.4\,N$$

■Applied load in the lateral direction $Ptrd_n$

$$Ptrd_1 = -\frac{m_1 \cdot \alpha_3 \cdot \ell_3}{2 \cdot \ell_0} = -111.1\,N$$

$$Ptrd_2 = +\frac{m_1 \cdot \alpha_3 \cdot \ell_3}{2 \cdot \ell_0} = +111.1\,N$$

$$Ptrd_3 = +\frac{m_1 \cdot \alpha_3 \cdot \ell_3}{2 \cdot \ell_0} = +111.1\,N$$

$$Ptrd_4 = +\frac{m_1 \cdot \alpha_3 \cdot \ell_3}{2 \cdot \ell_0} = -111.1\,N$$

[Combined Radial And Thrust Load]

● During uniform motion:

$P_{E1} = P_1 = 2891$ N
$P_{E2} = P_2 = 4459$ N
$P_{E3} = P_3 = 3479$ N
$P_{E4} = P_4 = 1911$ N

● During leftward acceleration

$P_E\ell a_1 = |P\ell a_1| + |Pt\ell a_1| = 608.9$ N
$P_E\ell a_2 = |P\ell a_2| + |Pt\ell a_2| = 7958.9$ N
$P_E\ell a_3 = |P\ell a_3| + |Pt\ell a_3| = 6978.9$ N
$P_E\ell a_4 = |P\ell a_4| + |Pt\ell a_4| = 1588.9$ N

● During leftward deceleration

$P_E\ell d_1 = |P\ell d_1| + |Pt\ell d_1| = 4057.7$ N
$P_E\ell d_2 = |P\ell d_2| + |Pt\ell d_2| = 3514.5$ N
$P_E\ell d_3 = |P\ell d_3| + |Pt\ell d_3| = 2534.5$ N
$P_E\ell d_4 = |P\ell d_4| + |Pt\ell d_4| = 3077.7$ N

● During rightward acceleration

$P_Era_1 = |Pra_1| + |Ptra_1| = 6390.9$ N
$P_Era_2 = |Pra_2| + |Ptra_2| = 1625.7$ N
$P_Era_3 = |Pra_3| + |Ptra_3| = 645.7$ N
$P_Era_4 = |Pra_4| + |Ptra_4| = 5410.9$ N

● During rightward deceleration

$P_Erd_1 = |Prd_1| + |Ptrd_1| = 1946.5$ N
$P_Erd_2 = |Prd_2| + |Ptrd_2| = 5625.7$ N
$P_Erd_3 = |Prd_3| + |Ptrd_3| = 4645.7$ N
$P_Erd_4 = |Prd_4| + |Ptrd_4| = 966.5$ N

[Static Safety Factor]

As indicated above, the maximum load is applied to the LM Guide during the leftward acceleration of the second LM block. Therefore, the static safety factor (f_s) is obtained in the following equation.

$$f_S = \frac{C_0}{P_E\ell a_2} = \frac{91.7\times10^3}{7958.9} = 11.5$$

[Average Load P_{mn}]

Obtain the average load applied to each LM block.

$$P_{m1} = \sqrt[3]{\frac{1}{2\cdot\ell_S}\left(P_{E\ell}\,a_1^3\cdot S_1 + P_{E1}^3\cdot S_2 + P_{E\ell}\,d_1^3\cdot S_3 + P_{Era}\,a_1^3\cdot S_1 + P_{E1}^3\cdot S_2 + P_{Erd}\,d_1^3\cdot S_3\right)}$$

$$= \sqrt[3]{\frac{1}{2\times1450}(608.9^3\times12.5+2891^3\times1400+4057.7^3\times37.5+6390.9^3\times12.5+2891^3\times1400+1946.5^3\times37.5)}$$

$$= 2940.1\text{N}$$

$$P_{m2} = \sqrt[3]{\frac{1}{2\cdot\ell_S}\left(P_{E\ell}\,a_2^3\cdot S_1 + P_{E2}^3\cdot S_2 + P_{E\ell}\,d_2^3\cdot S_3 + P_{Era}\,a_2^3\cdot S_1 + P_{E2}^3\cdot S_2 + P_{Erd}\,d_2^3\cdot S_3\right)}$$

$$= \sqrt[3]{\frac{1}{2\times1450}(7958.9^3\times12.5+4459^3\times1400+3514.5^3\times37.5+1625.7^3\times12.5+4459^3\times1400+5625.7^3\times37.5)}$$

$$= 4492.2\text{N}$$

$$P_{m3} = \sqrt[3]{\frac{1}{2\cdot\ell_S}\left(P_{E\ell}\,a_3^3\cdot S_1 + P_{E3}^3\cdot S_2 + P_{E\ell}\,d_3^3\cdot S_3 + P_{Era}\,a_3^3\cdot S_1 + P_{E3}^3\cdot S_2 + P_{Erd}\,d_3^3\cdot S_3\right)}$$

$$= \sqrt[3]{\frac{1}{2\times1450}(6978.9^3\times12.5+3479^3\times1400+2534.5^3\times37.5+645.7^3\times12.5+3479^3\times1400+4645.7^3\times37.5)}$$

$$= 3520.4\text{N}$$

$$P_{m4} = \sqrt[3]{\frac{1}{2\cdot\ell_S}\left(P_{E\ell}\,a_4^3\cdot S_1 + P_{E4}^3\cdot S_2 + P_{E\ell}\,d_4^3\cdot S_3 + P_{Era}\,a_4^3\cdot S_1 + P_{E4}^3\cdot S_2 + P_{Erd}\,d_4^3\cdot S_3\right)}$$

$$= \sqrt[3]{\frac{1}{2\times1450}(1588.9^3\times12.5+1911^3\times1400+3077.7^3\times37.5+5410.9^3\times12.5+1911^3\times1400+966.5^3\times37.5)}$$

$$= 1985.5\text{N}$$

[Nominal Life L_n]

The nominal life of the four LM blocks is obtained from the corresponding nominal life equations shown below.

$$L_1 = \left(\frac{C}{f_W\cdot P_{m1}}\right)^3\times50 = 160000\text{ km}$$

$$L_2 = \left(\frac{C}{f_W\cdot P_{m2}}\right)^3\times50 = 44800\text{ km}$$

$$L_3 = \left(\frac{C}{f_W\cdot P_{m3}}\right)^3\times50 = 93200\text{ km}$$

$$L_4 = \left(\frac{C}{f_W\cdot P_{m4}}\right)^3\times50 = 519700\text{ km}$$

(where $f_W = 1.5$)

Therefore, the service life of the LM Guide used in a machine or equipment under the conditions stated above is equivalent to the nominal life of the second LM block, which is 44,800 km.

Example of Calculating the Nominal Life (2) - with Vertical Mount

[Conditions]

Model No. : HSR25CA2SS+1500L-Ⅱ
(basic dynamic load rating: C =27.6 kN)
(basic static load rating: C_0=36.4 kN)

Mass : m_0 =100 kg
m_1 =200 kg
m_2 =100 kg

Stroke : ℓ_S =1000 mm

Distance : ℓ_0=300 mm
ℓ_1=80 mm
ℓ_2=50 mm
ℓ_3=280 mm
ℓ_4=150 mm
ℓ_5=250 mm

The mass (m_0) is loaded only during ascent; it is removed during descent.

Gravitational acceleration g=9.8 (m/s^2)

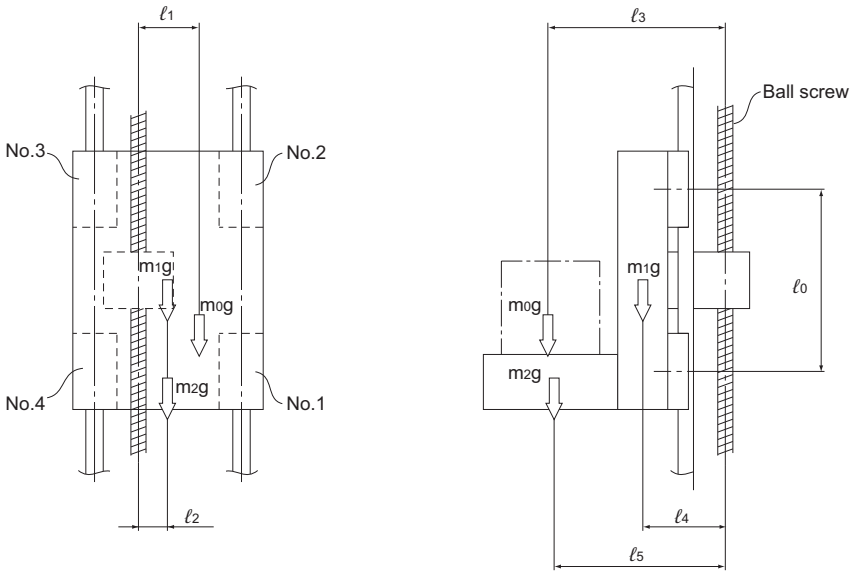

Fig.13 Condition

[Load Applied to the LM Block]

● During Ascent

■Load applied to each LM block in the radial direction Pu_n during ascent

$$Pu_1 = +\frac{m_1 g \cdot \ell_4}{2 \cdot \ell_0} + \frac{m_2 g \cdot \ell_5}{2 \cdot \ell_0} + \frac{m_0 g \cdot \ell_3}{2 \cdot \ell_0} = +1355.6\ \mathrm{N}$$

$$Pu_2 = -\frac{m_1 g \cdot \ell_4}{2 \cdot \ell_0} - \frac{m_2 g \cdot \ell_5}{2 \cdot \ell_0} - \frac{m_0 g \cdot \ell_3}{2 \cdot \ell_0} = -1355.6\ \mathrm{N}$$

$$Pu_3 = -\frac{m_1 g \cdot \ell_4}{2 \cdot \ell_0} - \frac{m_2 g \cdot \ell_5}{2 \cdot \ell_0} - \frac{m_0 g \cdot \ell_3}{2 \cdot \ell_0} = -1355.6\ \mathrm{N}$$

$$Pu_4 = +\frac{m_1 g \cdot \ell_4}{2 \cdot \ell_0} + \frac{m_2 g \cdot \ell_5}{2 \cdot \ell_0} + \frac{m_0 g \cdot \ell_3}{2 \cdot \ell_0} = +1355.6\ \mathrm{N}$$

■Load applied to each LM block in the lateral direction Ptu_n during ascent

$$Ptu_1 = +\frac{m_1 g \cdot \ell_2}{2 \cdot \ell_0} + \frac{m_2 g \cdot \ell_2}{2 \cdot \ell_0} + \frac{m_0 g \cdot \ell_1}{2 \cdot \ell_0} = +375.7\ \mathrm{N}$$

$$Ptu_2 = -\frac{m_1 g \cdot \ell_2}{2 \cdot \ell_0} - \frac{m_2 g \cdot \ell_2}{2 \cdot \ell_0} - \frac{m_0 g \cdot \ell_1}{2 \cdot \ell_0} = -375.7\ \mathrm{N}$$

$$Ptu_3 = -\frac{m_1 g \cdot \ell_2}{2 \cdot \ell_0} - \frac{m_2 g \cdot \ell_2}{2 \cdot \ell_0} - \frac{m_0 g \cdot \ell_1}{2 \cdot \ell_0} = -375.7\ \mathrm{N}$$

$$Ptu_4 = +\frac{m_1 g \cdot \ell_2}{2 \cdot \ell_0} + \frac{m_2 g \cdot \ell_2}{2 \cdot \ell_0} + \frac{m_0 g \cdot \ell_1}{2 \cdot \ell_0} = +375.7\ \mathrm{N}$$

● During Descent

■Load applied to each LM block in the radial direction Pd_n during descent

$$Pd_1 = +\frac{m_1 g \cdot \ell_4}{2 \cdot \ell_0} + \frac{m_2 g \cdot \ell_5}{2 \cdot \ell_0} = +898.3\ \mathrm{N}$$

$$Pd_2 = -\frac{m_1 g \cdot \ell_4}{2 \cdot \ell_0} - \frac{m_2 g \cdot \ell_5}{2 \cdot \ell_0} = -898.3\ \mathrm{N}$$

$$Pd_3 = -\frac{m_1 g \cdot \ell_4}{2 \cdot \ell_0} - \frac{m_2 g \cdot \ell_5}{2 \cdot \ell_0} = -898.3\ \mathrm{N}$$

$$Pd_4 = +\frac{m_1 g \cdot \ell_4}{2 \cdot \ell_0} + \frac{m_2 g \cdot \ell_5}{2 \cdot \ell_0} = +898.3\ \mathrm{N}$$

■Load applied to each LM block in the lateral direction Ptd_n during descent

$$Ptd_1 = +\frac{m_1 g \cdot \ell_2}{2 \cdot \ell_0} + \frac{m_2 g \cdot \ell_2}{2 \cdot \ell_0} = +245\ \mathrm{N}$$

$$Ptd_2 = -\frac{m_1 g \cdot \ell_2}{2 \cdot \ell_0} - \frac{m_2 g \cdot \ell_2}{2 \cdot \ell_0} = -245\ \mathrm{N}$$

$$Ptd_3 = -\frac{m_1 g \cdot \ell_2}{2 \cdot \ell_0} - \frac{m_2 g \cdot \ell_2}{2 \cdot \ell_0} = -245\ \mathrm{N}$$

$$Ptd_4 = +\frac{m_1 g \cdot \ell_2}{2 \cdot \ell_0} + \frac{m_2 g \cdot \ell_2}{2 \cdot \ell_0} = +245\ \mathrm{N}$$

[Combined Radial And Thrust Load]

● During Ascent

$P_{Eu1} = |P_{u1}| + |Pt_{u1}| = 1731.3$ N
$P_{Eu2} = |P_{u2}| + |Pt_{u2}| = 1731.3$ N
$P_{Eu3} = |P_{u3}| + |Pt_{u3}| = 1731.3$ N
$P_{Eu4} = |P_{u4}| + |Pt_{u4}| = 1731.3$ N

● During Descent

$P_{Ed1} = |Pd_1| + |Ptd_1| = 1143.3$ N
$P_{Ed2} = |Pd_2| + |Ptd_2| = 1143.3$ N
$P_{Ed3} = |Pd_3| + |Ptd_3| = 1143.3$ N
$P_{Ed4} = |Pd_4| + |Ptd_4| = 1143.3$ N

[Static Safety Factor]

The static safety factor (f_S) of the LM Guide used in a machine or equipment under the conditions stated above is obtained as follows.

$$f_S = \frac{C_0}{P_{EU2}} = \frac{36.4\times10^3}{1731.3} = 21.0$$

[Average Load P_{mn}]

Obtain the average load applied to each LM block.

$$P_{m1} = \sqrt[3]{\frac{1}{2\cdot\ell_S}(P_{EU1}{}^3\cdot\ell_S + P_{Ed1}{}^3\cdot\ell_S)} = 1495.1 \text{ N}$$

$$P_{m2} = \sqrt[3]{\frac{1}{2\cdot\ell_S}(P_{EU2}{}^3\cdot\ell_S + P_{Ed2}{}^3\cdot\ell_S)} = 1495.1 \text{ N}$$

$$P_{m3} = \sqrt[3]{\frac{1}{2\cdot\ell_S}(P_{EU3}{}^3\cdot\ell_S + P_{Ed3}{}^3\cdot\ell_S)} = 1495.1 \text{ N}$$

$$P_{m4} = \sqrt[3]{\frac{1}{2\cdot\ell_S}(P_{EU4}{}^3\cdot\ell_S + P_{Ed4}{}^3\cdot\ell_S)} = 1495.1 \text{ N}$$

[Nominal Life L_n]

The nominal life of the four LM blocks is obtained from the corresponding nominal life equations shown below.

$$L_1 = \left(\frac{C}{f_W\cdot P_{m1}}\right)^3 \times 50 = 182000 \text{ km}$$

$$L_2 = \left(\frac{C}{f_W\cdot P_{m2}}\right)^3 \times 50 = 182000 \text{ km}$$

$$L_3 = \left(\frac{C}{f_W\cdot P_{m3}}\right)^3 \times 50 = 182000 \text{ km}$$

$$L_4 = \left(\frac{C}{f_W\cdot P_{m4}}\right)^3 \times 50 = 182000 \text{ km}$$

(where $f_W = 1.2$)

Therefore, the service life of the LM Guide used in a machine or equipment under the conditions stated above is 182,000 km.

Predicting the Rigidity

Selecting a Radial Clearance (Preload)

Since the radial clearance of an LM Guide greatly affects the running accuracy, load carrying capacity and rigidity of the LM Guide, it is important to select an appropriate clearance according to the application. In general, selecting a negative clearance (i.e., a preload* is applied) while taking into account possible vibrations and impact generated from reciprocating motion favorably affects the service life and the accuracy.
For specific radial clearances, contact THK. We will help you select the optimal clearance according to the conditions.
The clearances of all LM Guide models (except model HR, GSR and GSR-R, which are separate types) are adjusted as specified before shipment, and therefore they do not need further preload adjustment.

*Preload is an internal load applied to the rolling elements (balls, rollers, etc.) of an LM block in advance in order to increase its rigidity.

Table4 Types of Radial Clearance

	Normal Clearance	Clearance C1 (Light Preload)	Clearance C0 (Medium Preload)
Condition	● The loading direction is fixed, impact and vibrations are minimal and 2 rails are installed in parallel. ● Very high precision is not required, and the sliding resistance must be as low as possible.	● An overhang load or moment load is applied. ● LM Guide is used in a single-rail configuration. ● Light load and high accuracy are required.	● High rigidity is required and vibrations and impact are applied. ● Heavy-cutting machine tool
Examples of applications	• Beam-welding machine • Book-binding machin • Automatic packaging machine • XY axes of general industrial machinery • Automatic sash-manufacturing machine • Welding machine • Flame cutting machine • Tool changer • Various kinds of material feeder	• Grinding machine table feed axis • Automatic coating machine • Industrial robot • various kinds of material high speed feeder • NC drilling machine • Vertical axis of general industrial machinery • Printed circuit board drilling machine • Electric discharge machine • Measuring instrument • Precision XY table	• Machining center • NC lathe • Grinding stone feed axis of grinding machine • Milling machine • Vertical/horizontal boring machine • Tool rest guide • Vertical axis of machine tool

Service Life with a Preload Considered

When using an LM Guide under a medium preload (clearance C0), it is necessary to calculate the service life while taking into account the magnitude of the preload.
To identify the appropriate preload for any selected LM Guide model, contact THK.

Rigidity

When a load is applied to an LM Guide, the bearings and LM block will elastically deform within the allowable load range. The ratio of displacement to applied load is referred to as “rigidity.” The radial internal clearance (preload) for the LM Guide can be specified in order to reduce displacement.
By using balls larger than the width of the race, they will naturally deform elastically as they roll, allowing the load to be maintained for longer while limiting displacement in the LM Guide.
The effect of the preload can be up to 2.8 times greater than the size of the preload itself. If that level is exceeded, the preload is released and the effect of the preload is lost.
When a preloaded LM Guide takes an external load, the displacement will be linear. The level of displacement will be approximately half that of an LM Guide with no preload.
The preload, in addition to reducing displacement, helps prevent premature failure due to vibration and impact/shock.

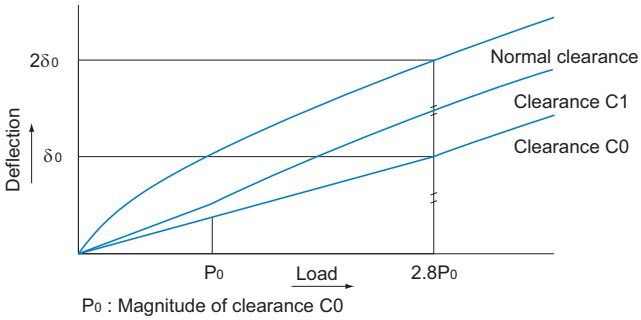

Fig.14 Rigidity Data

$$K=\frac{P}{\delta}$$

K	: Rigidity value	(N/μm)
δ	: Deflection	(μm)
P	: Calculated load	(N)

Determining the Accuracy

Accuracy Standards

Accuracy of the LM Guide is specified in terms of running parallelism, dimensional tolerance for height and width, and height and width difference between a pair when 2 or more LM blocks are used on one rail or when 2 or more rails are mounted on the same plane.
For details, see “Accuracy Standard for Each Model” on A1-75 to A1-85.

[Running of Parallelism]

It refers to the tolerance for parallelism between the LM block and the LM rail reference surface when the LM block travels the whole length of the LM rail with the LM rail secured on the reference reference surface using bolts.

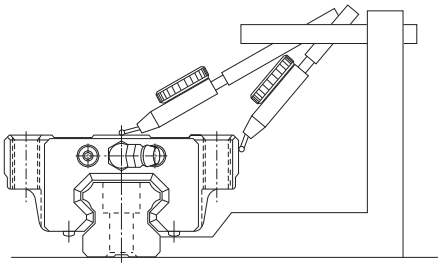

Fig.15 Running of Parallelism

[Difference in Height M]

Indicates a difference between the minimum and maximum values of height (M) of each of the LM blocks used on the same plane in combination.

[Difference in Width W_2]

Indicates a difference between the minimum and maximum values of the width (W_2) between each of the LM blocks, mounted on one LM rail in combination, and the LM rail.

Note 1) When two or more rails are used on the same plane in parallel, only the width (W_2) variation and dimensional tolerance of the master rail apply. Master LM rails will have a serial number ending with “KB” printed on them. However, this is not the case for standard grade products.

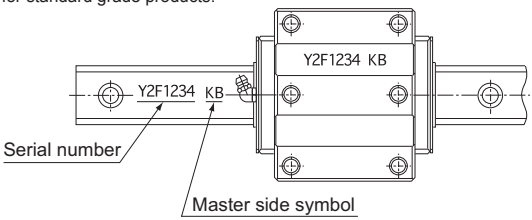

Fig.16 Master LM Rail (E.g. Model HSR-A)

Note 2) Accuracy measurements each represent the average value of the central point or the central area of the LM block.
Note 3) If it is mounted on a less rigid base such as an aluminum base, the curve of the rail will affect the accuracy of the machine. Therefore, it is necessary to define straightness of the rail in advance.

Guidelines for Accuracy Grades by Machine Type

Table5 shows guidelines for selecting an accuracy grade of the LM Guide according to the machine type.

Table5 Guideline for Accuracy Grades by Machine Type

Type of machine		Accuracy grades				
		Normal	H	P	SP	UP
Machine tool	Machining center			●	●	
	Lathe			●	●	
	Milling machine			●	●	
	Boring machine			●	●	
	Jig borer				●	●
	Grinding machine				●	●
	Electric discharge machine			●	●	●
	Punching press		●	●		
	Laser beam machine		●	●	●	
	Woodworking machine	●	●	●		
	NC drilling machine		●	●		
	Tapping center		●	●		
	Palette changer	●				
	ATC	●				
	Wire cutting machine			●	●	
	Dressing machine				●	●
Industrial robot	Cartesian coordinate	●	●	●		
	Cylindrical coordinate	●	●			
Semiconductor manufacturing equipment	Wire bonding machine			●	●	
	Prober				●	●
	Electronic component inserter		●	●		
	Printed circuit board drilling machine		●	●	●	
Other equipment	Injection molding machine	●	●			
	3D measuring instrument				●	●
	Office equipment	●	●			
	Conveyance system	●	●			
	XY table		●	●	●	
	Coating machine	●	●			
	Welding machine	●	●			
	Medical equipment	●	●			
	Digitizer		●	●	●	
	Inspection equipment			●	●	●

Normal : Normal grade
H : High accuracy grade
P : Precision grade
SP : Super precision grade
UP : Ultra precision grade

Mounting the LM Guide

Marking on the Master LM Guide and Combined Use

[Marking on the Master LM Guide]

All LM rails mounted on the same plane are marked with the same serial number. The LM rail marked with “KB” after the serial number is the master LM rail. The LM block on the master LM rail has its reference surface finished to a designated precision, allowing it to serve as the positioning reference for tables. (See Fig.1)
Normal grade LM Guides are not marked with “KB.” Therefore, any one of the LM rails having the same serial number can be used as the master LM rail.

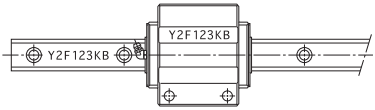

Master LM Guide

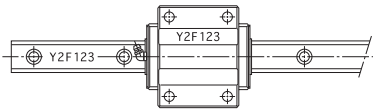

Subsidiary LM Guide

Y2F123 KB
Master mark
Serial number

Fig.1 Master and Subsidiary LM Guides (E.g. Model HSR-B)

[Markings on the Reference Surface]

In the LM Guide, the reference surface of the LM block is opposite the surface marked with the THK logo, and that of the LM rail is on the surface marked with a line (see Fig.2). If it is necessary to reverse the reference surface of the LM rail and block, or if the grease nipple must be oriented in the opposite direction, specify it.

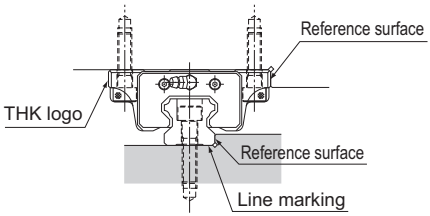

Master LM Guide

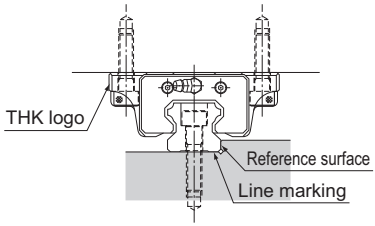

Subsidiary LM Guide

Fig.2 Markings on the Reference Surface

[Serial Number Marking and Combined Use of an LM Rail and LM Blocks]

An LM rail and LM block(s) used in combination must have the same serial number. When removing an LM block from the LM rail and reinstalling the LM block, make sure that they have the same serial number and the numbers are oriented in the same direction. (Fig.3)

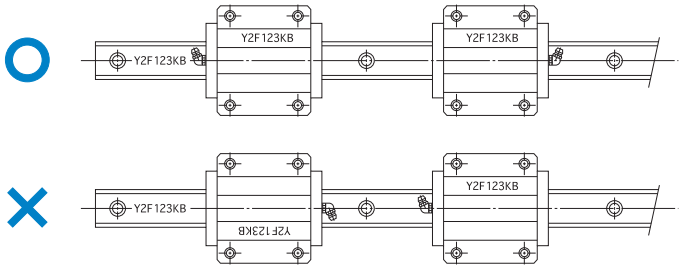

Fig.3 Serial Number Marking and Combined Use of an LM Rail and LM Blocks (E.g. Model HSR-A)

[Use of Jointed Rails]

When a long LM rail is ordered, two or more rails will be jointed together to the desired length. When jointing rails, make sure that the joint match marks shown in Fig.4 are correctly positioned.
When two LM Guides with connected rails are to be arranged in parallel to each other, the two LM Guides will be manufactured so that the two LM Guides are axisymmetrically aligned.
If a large load is applied near the LM rail joint, the LM rail may deflect and cause misalignment. Therefore, we recommend securely fastening the joint section by pressing the LM rail against the datum plane using a set screw or the like and keeping the L dimension as short as possible (Fig.4).
For details, contact THK.

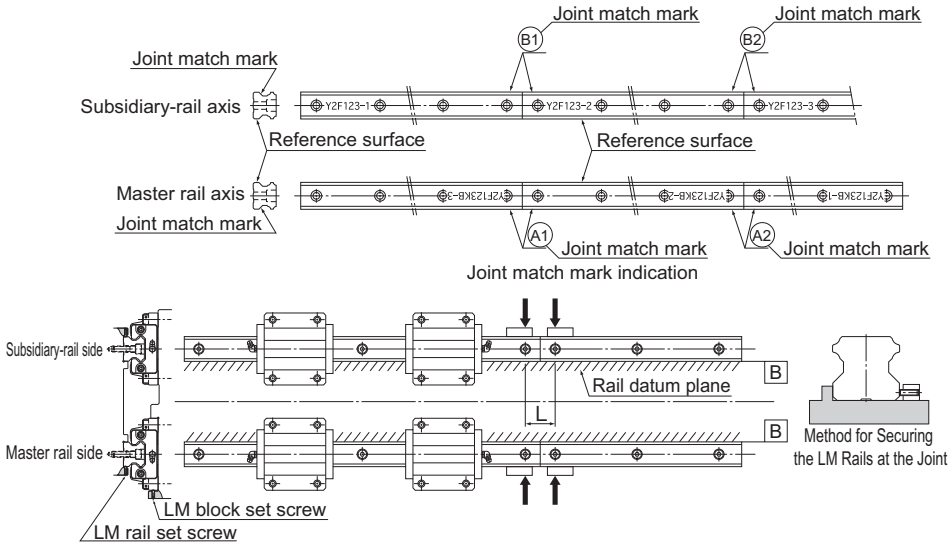

Fig.4 Use of Jointed Rails

Mounting Procedure

[Example of Mounting the LM Guide When an Impact Load is Applied to the Machine and therefore Rigidity and High Accuracy are Required]

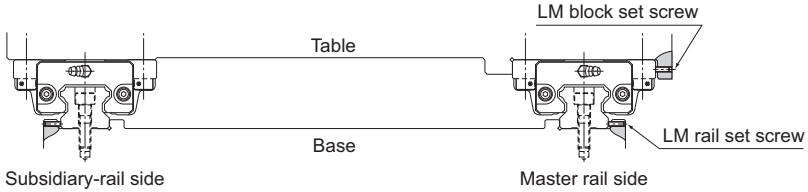

Fig.5 When an Impact Load is Applied to the Machine

● Mounting the LM Rail(s)

(1) Be sure to remove burr, dent and dust from the mounting surface of the machine to which the LM Guide is to be mounted before installing the LM Guide. (Fig.6)

Note) Since the LM Guide is coated with anti-rust oil, remove it from the reference surface by wiping the surface with washing oil before using the guide. Once the anti-rust oil has been removed, the reference surface is prone to getting rusted. We recommend applying low-viscosity spindle oil.

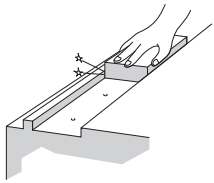

Fig.6 Checking the Mounting Surface

(2) Gently place the LM rail onto the base, and temporarily secure the bolts to the extent that the LM rail lightly contacts the mounting surface (align the line-marked side of the LM rail with the side reference-surface of the base). (Fig.7)

Note) The bolts for securing the LM Guide must be clean. When placing the bolts into the mounting holes of the LM rail, check if the bolt holes are displaced. (Fig.8) Forcibly tightening the bolt into a displaced hole may deteriorate the accuracy.

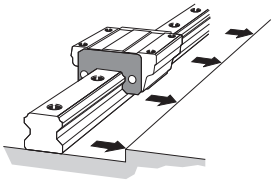

Fig.7 Aligning the LM Rail with the Reference-Surface

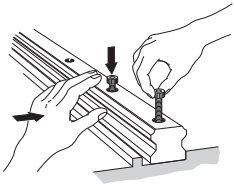

Fig.8 Checking with the Bolt for an Allowance

(3) Secure the set screws for the LM rail in order with a tightening force just enough to have the rail closely contact the side mounting surface. (Fig.9)

(4) Tighten the mounting bolts at the designated torque using a torque wrench. (See Fig.10, and Table1 and Table2 on B1-101.)

Note) To achieve stable accuracy when tightening the LM rail mounting bolts, tighten them in order from the center to the rail ends.

(5) Mount the other rail in the same manner to complete the installation of the LM rails.

(6) Hammer in caps into the bolt holes on the top face of each LM rail until the top of the cap is on the same level as the top face of the rail.

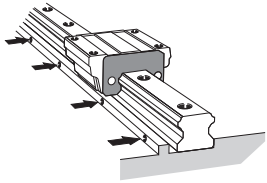

Fig.9 Tightening the Set screws

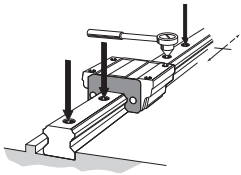

Fig.10 Fully Fastening the Mounting Bolts

● Mounting the LM Blocks

(1) Gently place the table on the LM blocks and temporarily fasten the mounting bolts.

(2) Press the master side LM blocks to the side reference surface of the table using set screws and position the table. (See Fig.5 on B1-91.)

(3) Fully fasten the mounting bolts on the master side and the subsidiary side to complete the installation.

Note) To evenly secure the table, tighten the mounting bolts in diagonal order as shown in Fig.11.

This method saves time in establishing straightness of the LM rail and eliminates the need to machine securing dowel pins, thus to drastically shorten the installation man-hours.

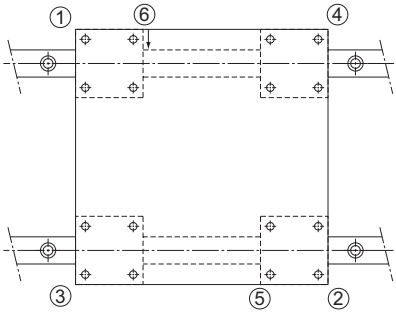

Fig.11 Sequence of Tightening the LM Blocks

[Example of Mounting the LM Guide When the Master LM Rail is not Provided with Set screws]

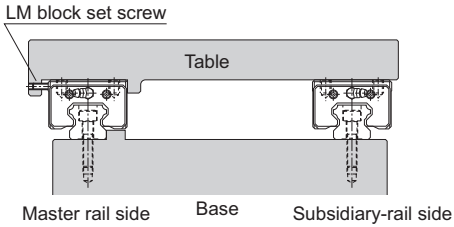

Fig.12 When the Master LM Rail is not Provided with Set screws

● Mounting the Master LM Rail

After temporarily fastening the mounting bolts, firmly press the LM rail to the side reference surface at the position of each mounting bolt using a small vice and fully fasten the bolt. Perform this in order from either rail end to the other. (Fig.13)

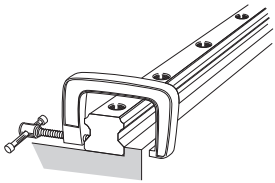

Fig.13

● Mounting the Subsidiary LM Rail

To mount the subsidiary LM rail in parallel with the master LM rail, which has been correctly installed, we recommend adopting the methods below.

■Using a Straight-edge

Place straight-edges between the two rails, and arrange the straight-edges in parallel with the side reference surface of the master LM rail using a dial gauge. Then, secure the mounting bolts in order while achieving straightness of the subsidiary rail with the straight edge as the reference by using the dial gauge. (Fig.14)

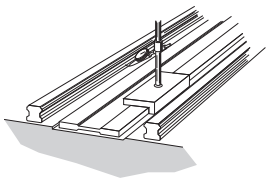

Fig.14

■Using Parallelism of the Table

Secure the two LM blocks on the master LM rail with the table (or a temporary table for measurement), and temporarily fasten the LM rail and the LM block on the subsidiary LM rail with the table. Place a dial gauge to the side face of the LM block on the subsidiary rail from the dial stand fixed on the table top, then fasten the bolts in order while achieving parallelism of the subsidiary LM rail by moving the table from the rail end. (Fig.15)

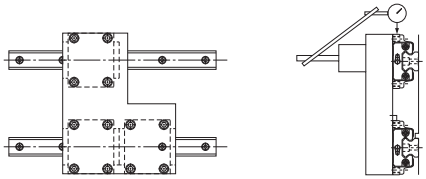

Fig.15

■Having the Subsidiary LM Rail Follow the Master LM Rail

Place the table on the blocks of the correctly mounted master LM rail and the temporarily fastened subsidiary LM rail, and fully fasten the two LM blocks on the master rail and one of the two LM blocks on the subsidiary rail with bolts. Fully tighten the mounting bolts on the subsidiary LM rail in order while temporarily fastening the remaining LM block on the subsidiary LM rail. (Fig.16)

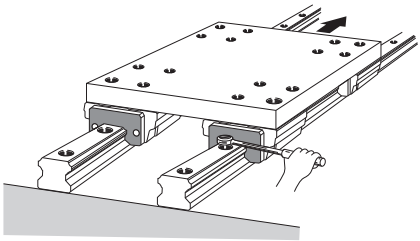

Fig.16

■Using a Jig

Use a jig like the one shown in Fig.17 to achieve parallelism of the reference surface on the subsidiary side against the side reference surface of the master side from one end of the rail by the mounting pitch, and at the same time, fully fasten the mounting bolts in order. (Fig.17)

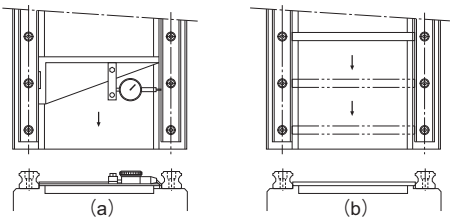

Fig.17

[Example of Mounting the LM Guide When the Master LM Rail Does not Have a Reference Surface]

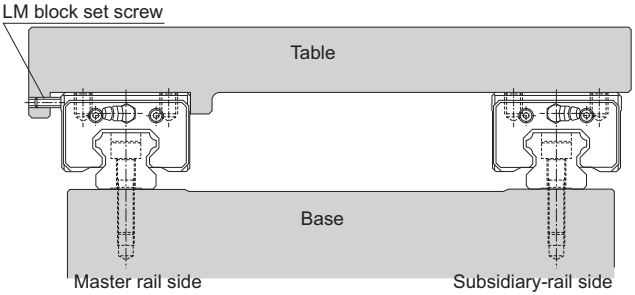

Fig.18

● Mounting the Master LM Rail

■Using a Temporary Reference Surface

You can temporarily set a reference surface near the LM rail mounting position on the base to achieve straightness of the LM rail from the rail end. In this method, two LM blocks must be joined together and attached to a measurement plate, as shown in Fig.19.

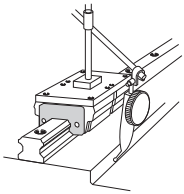

Fig.19

■Using a Straight-edge

After temporarily fastening the mounting bolts, use a dial gauge to check the straightness of the side reference surface of the LM rail from the rail end, and at the same time, fully fasten the mounting bolts.(Fig.20)

To mount the subsidiary LM rail, follow the procedure described on B1-93.

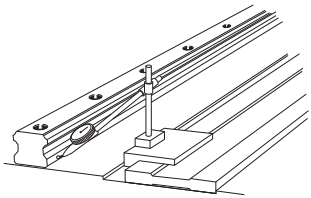

Fig.20

[Procedure for Assembling Model HR]

The following procedure is recommended for assembling model HR.

(1) Remove burr or knots from the LM rail mounting surface of the base using an oilstone. (Fig.21)

(2) Use a small vice to press the two LM rails to the base so that they closely contact the reference surface, then tighten the mounting bolts to the recommended torque (see B1-101). (Fig.22)
   a. Check if any of the bolts has a sinking.
   b. Use a torque wrench to tighten the bolts in order from the center to both ends.

(3) Mount the LM blocks on the table, then install them onto the LM rails. Be sure the mounting bolts for the LM blocks are temporarily fastened.

(4) Tighten the clearance adjustment bolt alternately to adjust the clearance.
   If a relatively large preload is applied in order to achieve high rigidity, control the tightening torque or the rolling resistance.
   a. It is preferable to use three clearance adjustment bolts for each LM block as shown in Fig.23.
   b. To obtain a favorable result of the clearance adjustment, set the tightening torque of the two outside screws at approx. 90% of that of the enter screw.

(5) Secure each LM block by gradually tightening the two LM block mounting bolts, which have temporarily been fastened, while sliding the table. (Fig.24)

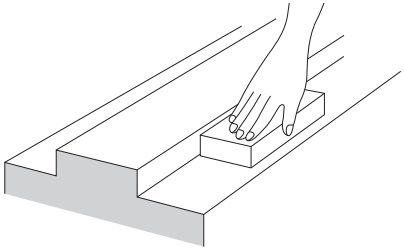

Fig.21

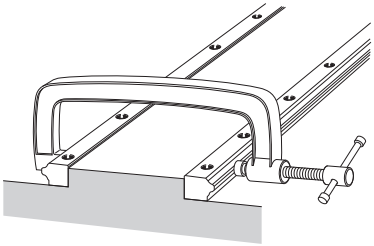

Fig.22

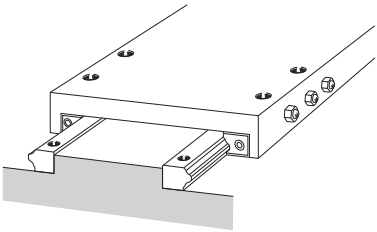

Fig.23

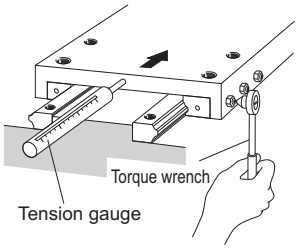

Fig.24

● Example of Clearance Adjustment

Design the clearance adjustment bolt so that it presses the center of the side face of the LM block.

a. Using an adjustment screw
   Normally, an adjustment screw is used to press the LM block.

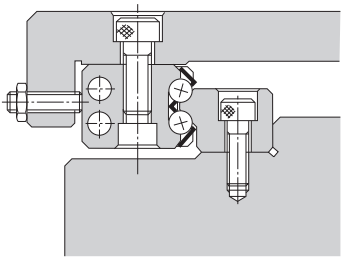

b. Using tapered gibs
   When high accuracy and high rigidity are required, use tapered gibs 1) and 2).

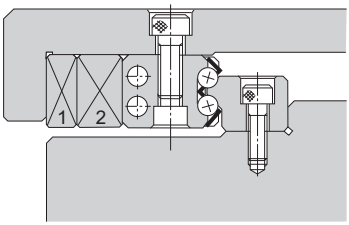

c. Using an eccentric pin
   A type using an eccentric pin to adjust the clearance is also available.

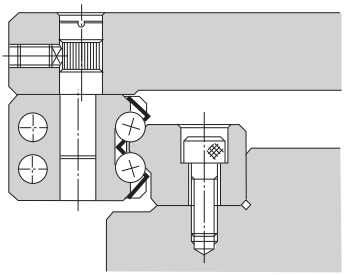

[Procedure for Assembling Model GSR]

The procedure for assembling model GSR is as follows:

(1) Align the table with the reference-surface of each LM block and fully fasten the mounting bolts to secure the blocks.
Both ends of the table must have a datum surface. (Fig.25)

(2) Place LM rail A onto the base and align the rail with a straight-edge.
Fully fasten the mounting bolts using a torque wrench. (Fig.26)

(3) Temporarily secure LM rail B onto the base, then mount the blocks on the rail by sliding the blocks.
Temporarily fasten LM rail B while pressing it toward the LM blocks. (Fig.27)

(4) Slide the table a few strokes to fit the LM blocks to LM rail B, then fully fasten LM rail B using a torque wrench. (Fig.28)

If there are more GSR units to be assembled, we recommend producing a jig like the one shown in Fig.29 first. You can easily mount LM rails while achieving parallelism of the LM rails using the jig.

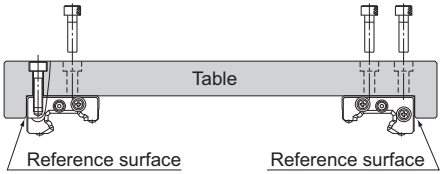

Fig.25

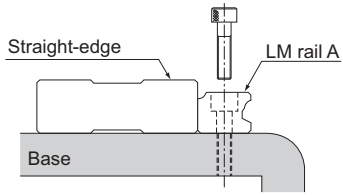

Fig.26

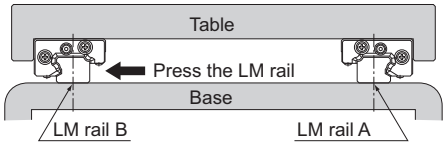

Fig.27

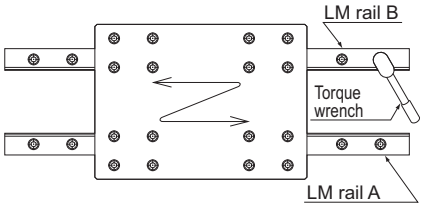

Fig.28

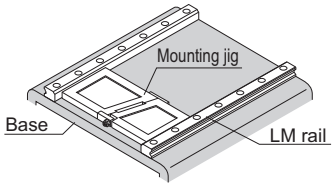

Fig.29

[Procedure for Assembling Model JR]

● Mounting the LM Rails

When two LM rails are to be used in parallel as shown in Fig.30, first secure one LM rail on the base, and place a dial gauge on the LM block. Then, place the pointer of the dial gauge on the side face and top face of the other LM rail to simultaneously adjust the parallelism and the level, thus to complete mounting the LM rails.

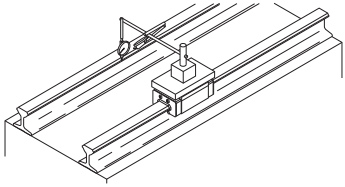

Fig.30

● Jointing LM Rails

When two or more LM rails are to be jointed, a special metal fitting as shown in Fig.31 is available. For such applications, specify this fitting when ordering the LM Guide (the rail will be tapped for attaching a joint fitting).

Installation Procedure

(1) Temporarily fasten the rail presser bolt.
(2) Secure rail A and the joint fitting with bolts C and D.
(3) Apply a dial gauge to side G of the joint between rails A and B. Adjust the left and right level differences using bolt E and set screw F on rail B.
If bolt E is tightened, rail B will move toward b side.
If set screw F is tightened, rail B will move toward a side.
(4) When the adjustment using set screw F is finished, secure set screw F with the nut.
(5) Adjust and secure the vertical direction using the rail presser.

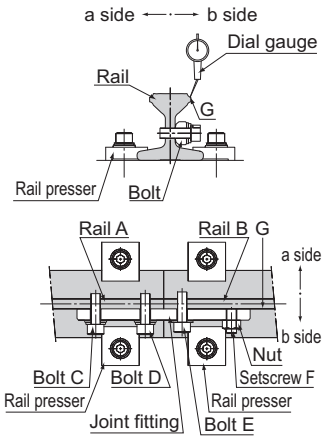

Fig.31

● Welding the LM Rail

When welding the LM rail, it is best to weld the LM rail while clamping it at the welding point with a small vice or the like as shown in Fig.32. For effective welding, we recommend the following welding conditions. (During welding the LM rail, take care to prevent spatter from contacting the LM rail raceway.)

[Welding conditions]
Preheating temperature:200℃
Postheating temperature:350℃
Note) If the temperature exceeds 750℃, the LM rail may be hardened again.

[For shielded metal arc welding]
Welding rod: LB-52 (Kobelco)

[For carbon dioxide arc welding]
Wire: YGW12
Electric current: 200A

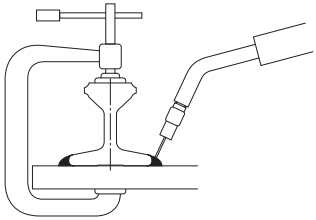

Fig.32

[Procedure for Assembling Model HCR]

To install the LM rails of R Guide model HCR, we recommend having any form of datum point (such as a pin) on the reference side (inside) of the LM rail, and pressing the LM rail to the datum point then stopping the LM rail with a presser plate from the counter-reference surface.

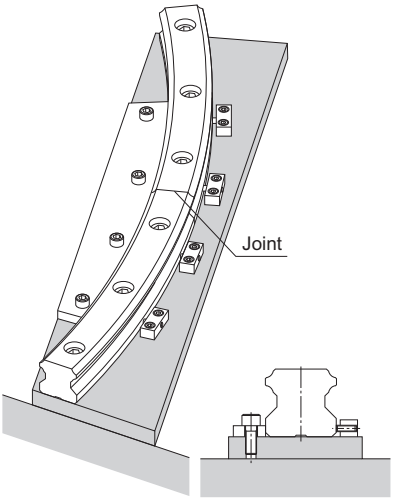

Fig.33 Method for Securing the LM Rails at the Joint

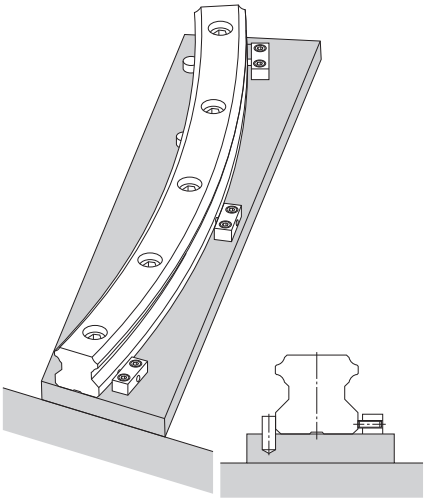

Fig.34 Method for Securing the LM Rail Using a Pin as a Datum Point

Methods for Measuring Accuracy after Installation

[When Measuring Running Accuracy for Single Rail Application]

When measuring running accuracy of the LM block, stable accuracy can be obtained by securing two LM blocks on an inspection plate, as shown in Fig.35. When using a dial gauge, we recommend placing the straight-edge as close as possible to the LM block in order to perform accurate measurement.

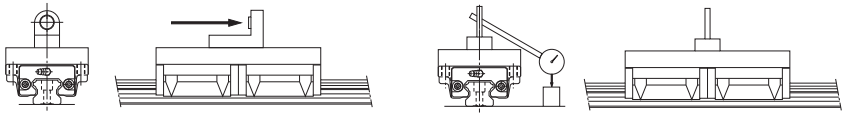

1) Measurement method using an auto-collimator　　2) Measurement method using a dial gauge

Fig.35 Methods for Measuring Accuracy after Installation

Recommended Tightening Torque for LM Rails

With high-precision LM rails for the LM Guide, their raceways are ground and accuracy is inspected with the rails tightened with bolts. When mounting a high-precision LM rail on a machine, we recommend using the corresponding tightening torque indicated in Table1 or Table2

Table1 Tightening Torques when Pan Head Screws are Used

Unit: N-cm

Screw model No.	Tightening torque	
	Not hardened	Hardened
M 2	17.6	21.6
M 2.3	29.4	35.3
M 2.6	44.1	52.9

Table2 Tightening Torques when Hexagonal-Socket-Head Type Bolts are Used

Unit: N-cm

Screw model No.	Tightening torque		
	Steel	Cast Iron	Aluminum
M 2	58.8	39.2	29.4
M 2.3	78.4	53.9	39.2
M 2.6	118	78.4	58.8
M 3	196	127	98
M 4	412	274	206
M 5	882	588	441
M 6	1370	921	686
M 8	3040	2010	1470
M 10	6760	4510	3330
M 12	11800	7840	5880
M 14	15700	10500	7840
M 16	19600	13100	9800
M 20	38200	25500	19100
M 22	51900	34800	26000
M 24	65700	44100	32800
M 30	130000	87200	65200

LM Guide
Options

Options B1-103
Seal and Metal scraper..... B1-104
Laminated Contact Scraper LaCS..... B1-106
Side Scraper..... B1-108
Protector..... B1-109
Light-Resistance Contact Seal LiCS B1-110
Dedicated bellows B1-111
Dedicated LM Cover..... B1-111
Cap C B1-112
Cap GC..... B1-113
Plate Cover SV Steel Tape SP B1-115
QZ Lubricator..... B1-118
Lubrication Adapter..... B1-121
Removing/mounting Jig B1-122
End Piece EP B1-123

Model No. B1-124
- Model Number Coding..... B1-124
- Notes on Ordering..... B1-128

Precautions on Use B1-130
Precautions on Using the LM Guide..... B1-130
Precautions on Handling the LM Guide for Special Environment .. B1-132
- LM Guide for Medium-to-Low Vacuum B1-132
- Oil-Free LM Guide B1-132

Precautions on Using Options for the LM Guide .. B1-133
- QZ Lubricator for the LM Guide..... B1-133
- Laminated Contact Scraper LaCS, Side Scraper for LM Guides .. B1-133
- Light Contact Seal LiCS for LM Guides ... B1-134
- Cap GC B1-134

Seal and Metal scraper

- For the supported models, see the table of options by model number on A1-458.
- For the LM block dimension (dimension L) with seal attached, see A1-470 to A1-477.
- For the maximum seal resistance, see A1-482 to A1-484.

Item name	Schematic diagram / mounting location	Purpose/location of use
End Seal	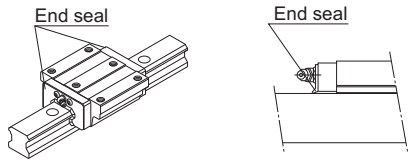	Used in locations exposed to dust
Side Seal	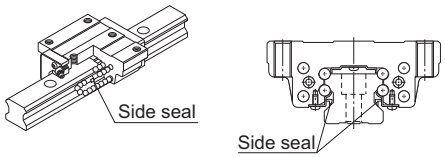	Used in locations where dust may enter the LM block from the side or bottom surface, such as vertical, horizontal and inverted mounts
Inner Seal	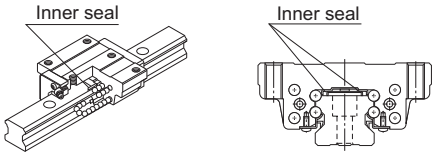	Used in locations severely exposed to dust or cutting chips
Double Seals	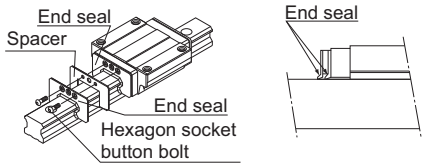	Used in locations exposed to much dust or many cutting chips
Metal Scraper (Non-contact)	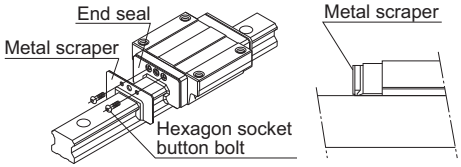	Used in locations where welding spatter may adhere to the LM rail

Options

Seal and Metal scraper

Symbol	Contamination Protection Accessories
UU	With end seal
SS	With end seal + side seal + inner seal*
DD	With double seals + side seal + inner seal*
ZZ	With end seal + side seal + inner seal* + metal scraper
KK	With double seals + side seal + inner seal* + metal scraper

* Some models are not equipped with inner seals.(See A1-458)

Laminated Contact Scraper LaCS

●For the supported models, see the table of options by model number on A1-458.
●For the LM block dimension (dimension L) with LaCS attached, see A1-470 to A1-477.
●For the resistance of LaCS, see A1-485.
●For notes regarding how to handle the LaCS, see B1-133.

For locations with adverse environment, Laminated Contact Scraper LaCS is available.
LaCS removes minute foreign material adhering to the LM rail in multiple stages and prevents it from entering the LM block with laminated contact structure (3-layer scraper).

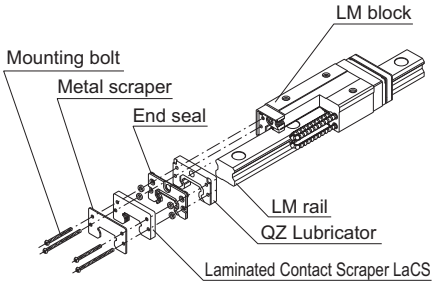

Appearance Drawing

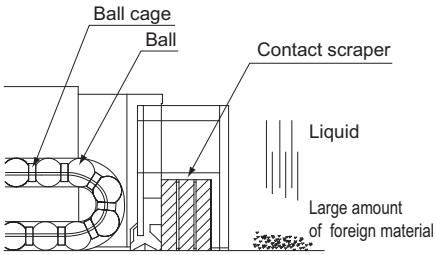

Structural Drawing

[Features]

- Since the 3 layers of scrapers fully contact the LM rail, LaCS is highly capable of removing minute foreign material.
- Since it uses oil-impregnated, foam synthetic rubber with a self-lubricating function, low friction resistance is achieved.

Symbol	Contamination Protection Accessories
SSHH	With end seal + side seal + inner seal*1 + LaCS
DDHH	With double seals + side seal + inner seal *1 + LaCS
ZZHH	With end seal + side seal + inner seal *1 + metal scraper + LaCS
KKHH	With double seals + side seal + inner seal *1 + metal scraper + LaCS
JJHH*2	With end seal + side seal + inner seal*1 + LaCS + protector (serving also as metal scraper)
TTHH*2	With double seals + side seal + inner seal*1 + LaCS + protector (serving also as metal scraper)

*1 Some models are not equipped with inner seals.(See A1-458)
*2 JJHH and TTHH are only available for models SVR/SVS, NR/NRS-X and SRG.
Note) HH type (with LaCS) for models SVR/SVS, NR/NRS-X, and SRG comes with a protector (see B1-109).
Contact THK if you want to use the Protector with other options.

● Test under an Environment with a Water-soluble Coolant

[Test conditions] Test environment: water-soluble coolant

Item		Description
Tested model	No.1	SHS45R1SS+3000L (end seal only)
	No.2	SHS45R1SSHH+3000L (end seal and LaCS)
Maximum speed		200m/min
Environmental conditions		Coolant sprayed: 5 time per day

[Test result]

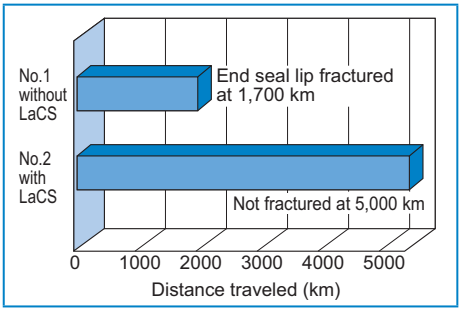

Magnified view of the end seal lip

No. 1: without LaCS - lip fractured at 1,700 km

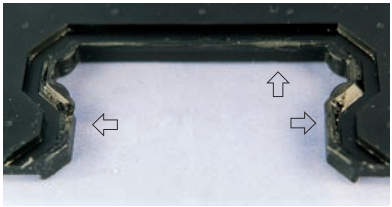

⇦Areas marked with arrow are fractured

No. 2: with LaCS - no anomaly observed after traveling 5,000 km

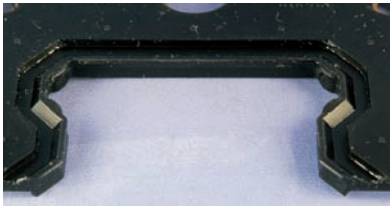

Lip has not been fractured

● Test under an Environment with Minute Foreign Matter

[Test conditions] Test environment: minute foreign material

Item		Description
Tested model	No.1	Caged Ball LM Guide #45R (DD+600L) double seals only
	No.2	Caged Ball LM Guide #45R (HH+600L) LaCS only
Max speed/ acceleration		60m/min, 1G
External load		9.6kN
Foreign material conditions		Type: FCD450#115 (particle diameter: 125 μm or less)
		Sprayed amount: 1g/1hour (total sprayed amount: 120 g)

[Test result] Amount of foreign material entering the raceway

Seal configuration		Amount of foreign material entering the raceway g
Double-seal configuration (2 end seals superposed with each other)	Tested model 1	0.3
	Tested model 2	0.3
	Tested model 3	0.3
LaCS	Tested model 1	0
	Tested model 2	0
	Tested model 3	0

No. 1 Traveled 100 km (double-seal configuration)

Large amount of foreign matter has entered the raceway

No. 2 Traveled 100 km (LaCS only)

No foreign matter entering the raceway observed

Side Scraper

- For the supported models: models SVR/SVS, NR/NRS-X and SRG
- For the resistance of side scraper, see A1-486.
- For the LM block dimension (dimension L) with side scraper attached, see A1-470.
- For notes regarding how to handle the side scraper, see B1-133.

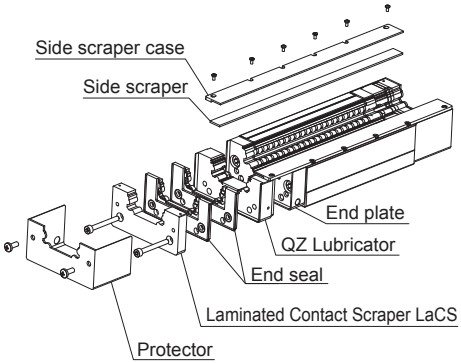

Outline view
(Ex: in case of QZTTHHYY type)

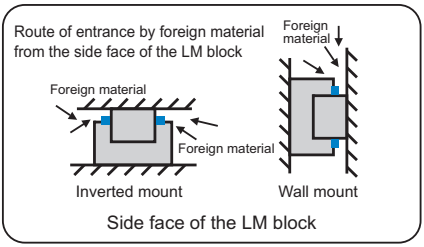

[Features]

- Minimizes foreign material entering from the side of the LM Guide in a harsh environment.
- Demonstrates a dust protection effect in inverted or wall mount.

Model number coding

SVR45 LR 1 QZ JJHH YY C1 +1200L

With side scraper*

* The side scraper can accommodate various options of dust control accessories and lubrication accessories. For details, contact THK.

Protector

●Applicable models: models SVR/SVS, NR/NRS-X and SRG
●HH type (with LaCS) for models SVR/SVS, NR/NRS-X and SRG is provided with the protector.
●For the LM block dimension (dimension L) with protector attached, see A1-470.

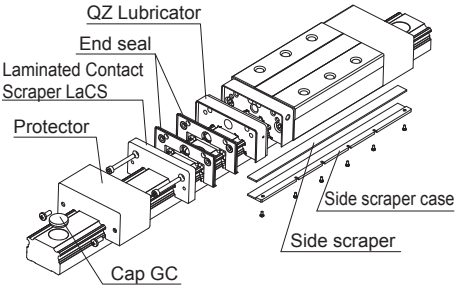

Outline view
(Ex: in case of QZTTHHYY type)

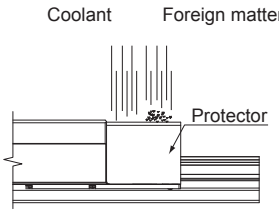

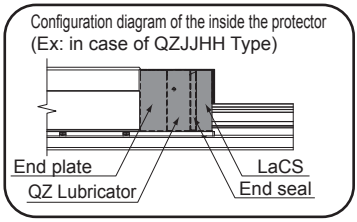

[Features]

- The protector minimizes the entrance of foreign material even in harsh environments where foreign material such as fine particles and liquids are present.

Note1) Those models equipped with QZ Lubricator cannot have a grease nipple. When desiring a grease nipple for a model attached with QZ, contact THK.
Note2) Contact THK if you want to use the protector with other options.

Light-Resistance Contact Seal LiCS

- For the supported models, see the table of options by model number on A1-458.
- For the LM block dimension (dimension L) with LiCS attached, see A1-480.
- For the resistance of LiCS, see A1-486.
- For notes regarding how to handle the LiCS, see B1-134.

LiCS is a light sliding resistance contact seal. It is effective in removing dust on the raceway and retaining a lubricant such as grease. It achieves extremely low drag and smooth, stable motion.

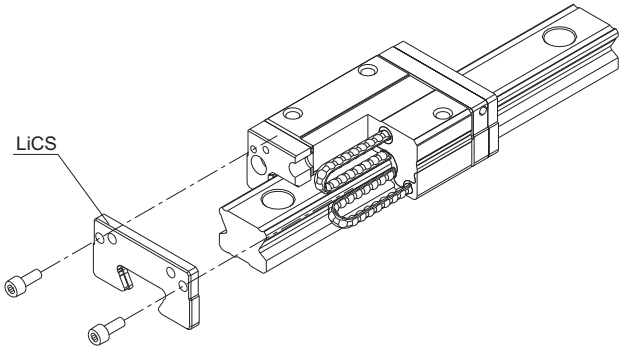

Fig.1 Structural Drawing of SSR + LiCS

[Features]

Light-Resistance Contact Seal LiCS is a seal that uses a light-resistance material in its sealing element and contacts the LM rail raceway to achieve low drag resistance. It is optimal for applications where low drag resistance is required, such as semiconductor-related devices, inspection devices and OA equipment all of which are used in favorable environments.

- Since the sealing element contacts the LM rail raceway, it is effective in removing dust on the raceway.
- Use of oil-impregnated, expanded synthetic rubber, which has excellent self-lubricating property, achieves low drag resistance.

Model number coding

SSR20 XW 2 GG C1 +600L P -II

- SSR20: LM Guide model number
- XW: Type of LM block
- 2: No. of LM blocks used on the same rail
- GG: With LiCS seal on both ends
- C1: Radial clearance symbol
  - Normal (No symbol)
  - Light preload (C1)
  - Medium preload (C0)
- +600L: LM rail length (in mm)
- P: Accuracy symbol
  - Normal grade (No Symbol) / High accuracy grade (H)
  - Precision grade (P) / Super precision grade (SP)
  - Ultra precision grade (UP)
- -II: Symbol for No. of rails used on the same plane

Symbol	Contamination Protection Accessories
GG	LiCS
PP	With LiCS + side seal + inner seal*

* Some models are not equipped with inner seals.(See A1-458)

Dedicated bellows

●For the supported models, see the table of options by model number on A1-458.
●For the dedicated bellows dimensions, see A1-498 to A1-509.

Item name	Schematic diagram / mounting location	Purpose/location of use
Dedicated Bellows	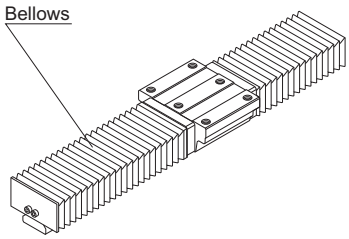	Used in locations exposed to dust or cutting chips

Dedicated LM Cover

●For the supported models, see the table of options by model number on A1-458.
●For the dedicated LM cover dimensions, see A1-511.

Item name	Schematic diagram / mounting location	Purpose/location of use
Dedicated LM Cover	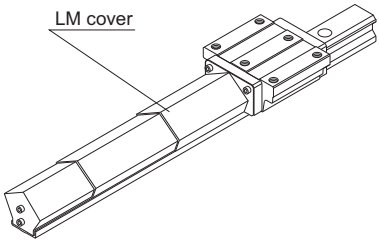	Used in locations exposed to dust or cutting chips Used in locations where high temperature foreign material such as flying spatter

Cap C

If any of the LM rail mounting holes of an LM Guide is filled with cutting chips or foreign material, they may enter the LM block structure. Entrance of such foreign material can be prevented by covering each LM rail mounting hole with the dedicated cap.
Since the dedicated cap C for LM rail mounting holes uses a special synthetic resin with high oil resistance and high wear resistance, it is highly durable.
To attach the dedicated cap to the mounting hole, place a flat metal piece like one shown in Fig.1 on the cap and gradually hammer in the cap until it is on the same level as the top face of the LM rail.
When attaching the dedicated cap C for LM rail mounting holes, do not remove any of the LM blocks from the LM rail.

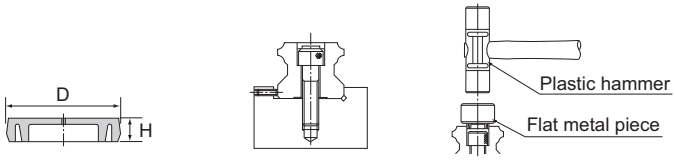

Fig.1 Cap C

Note 1) The dedicated LM rail mounting hole cap is also available in metal (dedicated GC cap).
Note 2) If this product will be used in special environments such as in a vacuum or at very low or high temperatures, contact THK. When using the product in special environments such as those with coolants or corrosive solvents, contact THK.

Cap GC

●For notes regarding how to handle the GC cap, see B1-134.

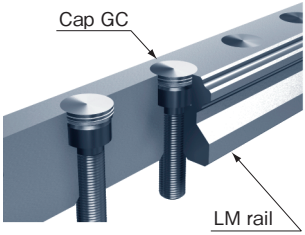

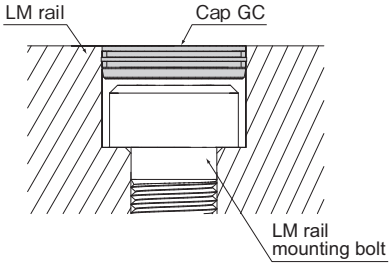

GC caps are metal caps designed to cover the mounting holes in LM rails (in compliance with RoHS directives).
In harsh environments, preventing any influx of coolant or foreign material from the top face of the LM rail, coupled with the use of seals, will dramatically improve the contamination protection performance for the LM guide.

[Features]

- **Eliminating gaps around the mounting holes (countersunk holes)**

The GC caps press into the mounting holes (countersunk holes) so that there are no gaps.

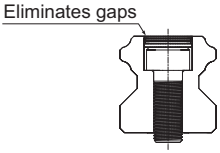

- **Provides long-term sealing due to its excellent abrasion resistance**

If a countermeasure such as a seal passes along the rail when there is foreign matter on the upper surface of the LM rail, it generates force pushing the GC cap in from above. In this situation, the cap does not get pushed inwards as it is easily strong enough to stay in place.

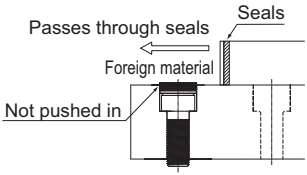

- **GC caps are highly effective in a range of different environments.**

Service environment			LM Guide		Example of Using the Spring Pad
			Standard C cap fitted	GC cap fitted	
Poor environment	Foreign matter concentration: Low	Metal powder, sputtering	○	◎	Welding machines, robots
		Wood shavings, coolant (Environments that strip away oils)	○	◎	Woodworking machinery, washers
		Metal powder + coolant	○	◎	Lathes, machining centers
	Foreign matter concentration: High	Metal powder, sputtering	△	◎	Welding machines, robots
		Wood shavings, coolant (Environments that strip away oils)	△	◎	Woodworking machinery, washers
		Metal powder + coolant	△	◎	Lathes, machining centers

◎: Particularly effective ○: Effective △: Not particularly effective

[Applicable model number]

Model number coding

SVR45 LR 2 QZ TTHH C0 +1200L P -Ⅱ GC

- SVR45: Model No.
- LR: Type of LM block
- 2: No. of LM blocks used on the same rail
- QZ: With QZ Lubricator
- TTHH: Contamination protection accessory symbol
- C0: Radial clearance symbol
  - Normal (No symbol)
  - Light preload (C1)
  - Medium preload (C0)
- +1200L: LM rail length (in mm)
- P: Accuracy symbol
  - Normal grade (No Symbol)/High accuracy grade (H)
  - Precision grade (P)/Super precision grade (SP)
  - Ultra precision grade (UP)
- -Ⅱ: Symbol for No. of rails used on the same plane
- GC: With GC cap

Note1) LM guides with GC caps are special rails.
Note2) They cannot be mounted on stainless steel LM rails or LM rails that have undergone surface treatment.
Note3) If this product will be used in special environments, such as in a vacuum or at very low or high temperatures, contact THK.
Note4) GC caps are not sold individually. They are sold as a set with LM guides.
Note5) The openings of LM rail mounting holes are not chamfered. Take care not to injure your hands while working.
Note6) After fitting GC caps, the upper surface of the LM rail must be flattened and cleaned (wiped).
Note7) If you wish to fit GC caps for a single rail, use the sample model number configuration shown below.

(Example) SVR45LR2QZTTHHC0+1200LPGC — With GC cap

* Add the symbol (GC) to the end of the model number.

● Mounting method

The procedure for inserting a GC cap into a mounting hole consists of using a flat aligning fitting to gradually punch the cap into the hole until it is level with the upper surface of the LM rail, as shown in the figure. Fit GC caps without removing the LM rail from the LM block.

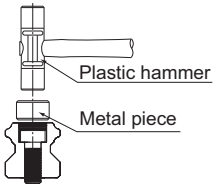

Plate Cover SV Steel Tape SP

●For the supported models, see the table of options by model number on A1-458.

Item name	Schematic diagram / mounting location	Purpose/location of use
Plate Cover SV	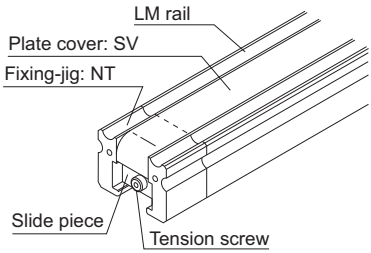	For the LM Guide, steel tapes are available as a means of contamination protection for machine tools. By covering the LM rail mounting holes with an ultra-thin stainless steel (SUS304) plate, the plate cover SV drastically increases sealability, thus to prevent the penetration of a coolant or cutting chips from the top face of the LM rail. For the mounting method, see B1-116. Note) When mounting the plate cover, the LM rail needs to be machined. Indicate that the plate cover is required when ordering the LM Guide.
Steel Tape SP	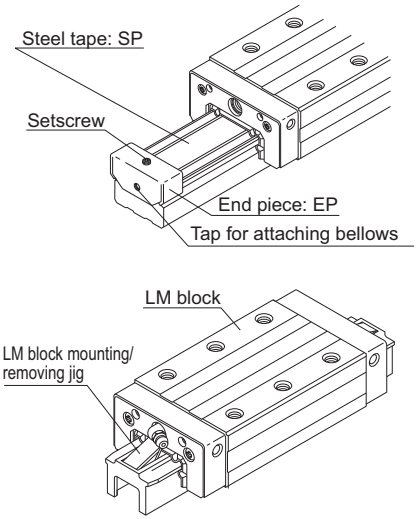	For the LM Guide, steel tapes are available as a means of contamination protection for machine tools. By covering the LM rail mounting holes with an ultra-thin stainless steel (SUS304) plate, the steel tape SP drastically increases sealability, thus to prevent the penetration of a coolant or cutting chips from the top face of the LM rail. (When mounting the steel tape, end piece EP can be used as a means to secure the cover.) For the mounting method, see B1-117. Note) When mounting the steel tape, the LM rail needs to be machined. Indicate that the steel tape is required when ordering the LM Guide.

[Mounting Procedure for Plate Cover SV]

(1) Attach slide pieces to the plate cover.
Place the slide pieces on the plate cover with their chamfered sides facing outward, hold the plate cover with the slide pieces and the securing plates, and then secure them with countersunk screws.

(2) Use an LM block mounting/removing jig to remove the LM block from the LM rail, and then mount the fixing-jigs onto the LM rail.

(3) Temporarily secure either slide piece.
Insert either slide piece into one of the fixing-jigs, then attach the slide piece to the LM rail's end face using the tension adjustment bolt and gently secure the bolt until the bolt head is inside the fixing-jig.

(4) Temporarily secure the other slide piece.
Temporarily secure the other slide piece in the same manner as above.

(5) Apply tension to the plate cover.
Apply tension to the plate cover by evenly securing the tension adjustment bolts on both ends of the LM rail. Make sure there is only a small difference between the H and H' dimensions in Fig.5. If the difference is too large, there may be no interference left on either end.

(6) Mount the LM block on the LM rail.
Identity the reference surface of the LM rail and the LM block, then insert the LM rail into the LM block using the LM block mounting / removing jig.

Note1) When removing or the mounting the LM block, use much care not to let the balls fall off.
Note2) The plate cover is an ultra-thin stainless steel (SUS304) plate. When handing it, use much care not to bend it.
Note3) The plate cover is available for model NR/NRS 75.

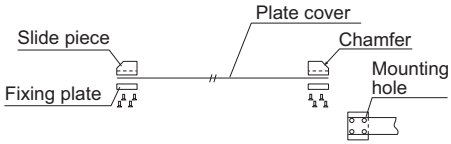

Fig.1

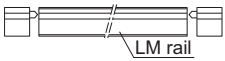

Fig.2

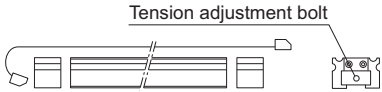

Fig.3

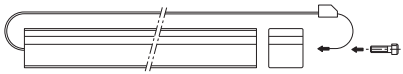

Fig.4

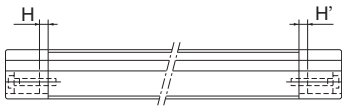

Fig.5

[Mounting Procedure for Steel Tape SP]

(1) Use an LM block mounting/removing jig to remove the LM block from the LM rail.
(2) Thoroughly degrease and clean the top face of the LM rail, to which the steel tape is to be adhered. For degreasing, use an adequately volatile detergent (e.g., industrial alcohol).
(3) Carefully adhere the steel tape from the end with care not to let it bend or sag, while gradually peeling the release paper from the steel tape.
(4) Have the steel tape settle on the rail by rubbing the tape. The adhesive strength increases with time. The adhering tape can be peeled off by pulling its end upward.
(5) Mount the LM block onto the LM rail using the LM block mounting/removing jig.
(6) Attach the end pieces on both ends of the LM rail and further secure the steel tape. When securing the end pieces, fasten only the setscrew on the top face of each end piece.
(The tap on the end face of the end piece is used for mounting bellows.)

Note1) The setscrew on the side face is used to lightly secure the bent steel tape. Be sure to stop fastening the screw as soon as it hits the end face, and do not force the screw further.
Note2) Since the steel tape is a thin steel plate, mishandling it may cause an accident such as cutting your finger. When handling it, take an effective safety measure such as wearing rubber gloves.

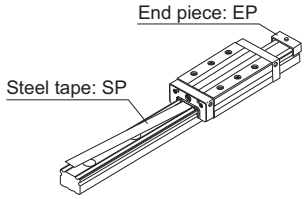

Fig.6

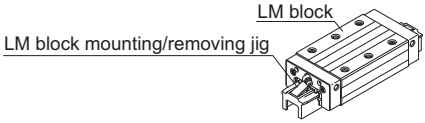

Fig.7

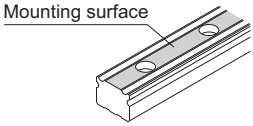

Fig.8

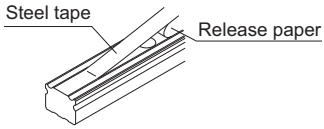

Fig.9

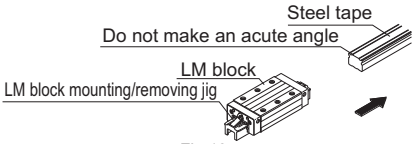

Fig.10

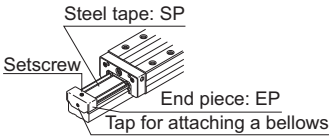

Fig.11

QZ Lubricator

●For the supported models, see the table of options by model number on A1-458.
●For the LM block dimension with QZ attached, see A1-490 to A1-493.
●For notes regarding how to handle the QZ, see B1-133.

QZ Lubricator feeds the right amount of lubricant to the raceway on the LM rail. This allows an oil film to continuously be formed between the rolling element and the raceway, and drastically extends the lubrication and maintenance intervals.
The structure of QZ Lubricator consists of three major components: (1) a heavy oil-impregnated fiber net (function to store lubricant), (2) a high-density fiber net (function to apply lubricant to the raceway) and (3) an oil-control plate (function to adjust oil flow). The lubricant contained in QZ Lubricator is fed by the capillary phenomenon, which is used also in felt pens and many other products, as the fundamental principle.

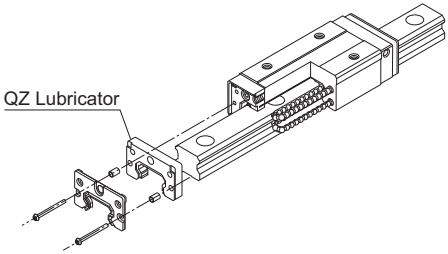

Appearance Drawing

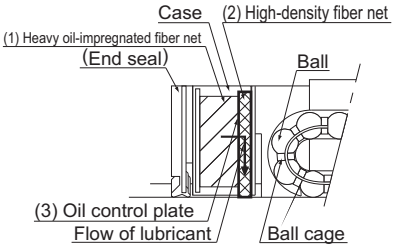

Structural Drawing

[Features]

- Since it supplements an oil loss, the lubrication maintenance interval can be significantly extended.
- Eco-friendly lubrication system that does not contaminate the surrounding area since it feeds the right amount of lubricant to the ball raceway.

Symbol	Contamination Protection Accessories
QZUU	With end seal + QZ
QZSS	With end seal + side seal + inner seal*1 + QZ
QZDD	With double seals + side seal + inner seal*1 + QZ
QZZZ	With end seal + side seal + inner seal*1 + metal scraper + QZ
QZKK	With double seals + side seal + inner seal*1 + metal scraper + QZ
QZGG	With LiCS + QZ
QZPP	With LiCS + side seal + inner seal*1 + QZ
QZSSHH	With end seal + side seal + inner seal*1 + LaCS + QZ
QZDDHH	With double seals + side seal + inner seal*1 + LaCS + QZ
QZZZHH	With end seal + side seal + inner seal*1 + metal scraper + LaCS + QZ
QZKKHH	With double seals + side seal + inner seal*1 + metal scraper + LaCS + QZ
QZJJHH*2	With end seal + side seal + inner seal*1 + LaCS + QZ + protector (serving also as metal scraper)
QZTTHH*2	With double seals + side seal + inner seal*1 + LaCS + QZ + protector (serving also as metal scraper)

*1 Some models are not equipped with inner seals.(See A1-458)
*2 QZJJHH and QZTTHH are available only for models SVR/SVS, NR/NRS-X and SRG.
Note1) HH type (with LaCS) for models SVR/SVS, NR/NRS-X, and SRG comes with a protector (see B1-109).
Contact THK if you want to use the Protector with other options.
Note2) Those models equipped with QZ Lubricator cannot have a grease nipple. When desiring a grease nipple for a model attached with QZ, contact THK.

● Significantly Extended Maintenance Interval

Attaching QZ Lubricator helps extend the maintenance interval throughout the whole load range from the light load area to the heavy load area.

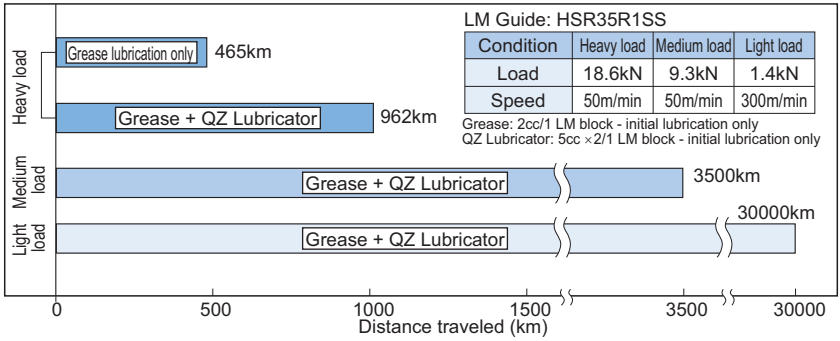

LM Guide: HSR35R1SS

Condition	Heavy load	Medium load	Light load
Load	18.6kN	9.3kN	1.4kN
Speed	50m/min	50m/min	300m/min

Grease: 2cc/1 LM block - initial lubrication only
QZ Lubricator: 5cc ×2/1 LM block - initial lubrication only

LM Guide Running Test without Replenishment of Lubricant

● Effective Use of Lubricant

Since the lubricator feeds the right amount of lubricant to the ball raceway, lubricant can be used efficiently.

[Test conditions] speed: 300 m/min

Comparison of lubricant consumption after traveling 5,000 km

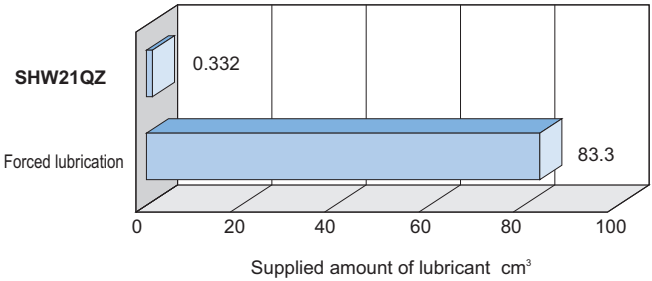

Amount of oil contained in QZ Lubricator
0.166cm³/ 2 units
(attached to both ends of the LM block)
=0.332cm³

Compared

Forced lubrication
0.03cm³/6min×16667min
=83.3cm³

Lubricant consumption is 1/250 less than forced lubrication.

● Effective in Helping Lubrication under Severe Environments

A 5,000 km durability test was conducted under severe environments (containing coolant and contaminated environment).

[Test conditions]

Model No.	① Caged Ball LM Guide #45	② Full-ball LM Guide #45
Load	8kN	6kN
Speed	60m/min	
Coolant	Immersed 48 hrs, dried 96 hrs	
Foreign material	Foundry dust (125 μm or less)	
Lubrication	AFA Grease + QZ	Super Multi 68 Oiling cycle: 0.1cc/shot Periodically lubricated every 16 min

[Test result]

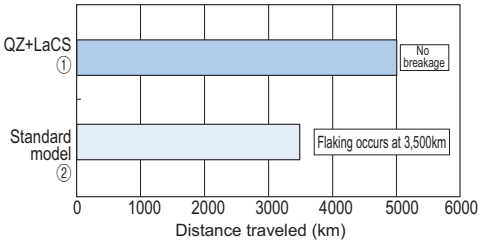

* When using the LM system under severe environment, use QZ Lubricator and Laminated Contact Scraper LaCS (see "Laminated Contact Scraper LaCS" on B1-106) in combination.

Lubrication Adapter

An oil lubricant-only lubrication adapter is available for models NR/NRS.
Even if the LM Guide is installed in an orientation where oil lubrication is difficult, such as wall mount and inversed mount, the adapter is capable of feeding a constant quantity of lubricant to the four raceways.

[Features]

The dedicated lubrication adapter for models NR-NRS is built in with a constant quantity distributor. Therefore, the adapter can accurately feed a constant quantity of lubricant to each raceway regardless of the mounting orientation.
The adapter is economical since it is capable of constantly feeding the optimum amount of lubricant and helping eliminate the supply of surplus lubricant.
To provide pipe arrangement, simply connect an intermittent lubrication pump widely used for ordinary machine tools to the greasing holes (M8) on the front and the side of the lubrication adapter.

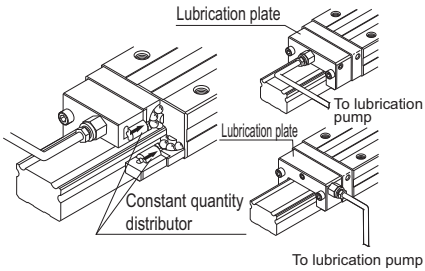

Fig.1 Structural Drawing

[Specifications]

Viscosity range of lubricant used	32 to 64 mm²/s recommended
Discharge	0.03×4, 0.06×4cc/1shot
Diameter of pipe connected	ϕ4, ϕ6
Material	Aluminum alloy

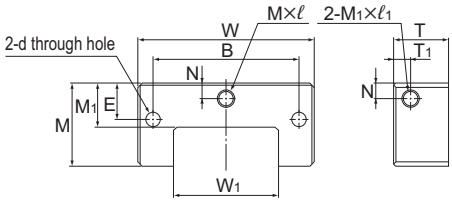

Fig.2

Removing/mounting Jig

When assembling the guide, do not remove the LM block from the LM rail whenever possible. If it is inevitable to remove the LM block due to the plate cover type or the assembly procedure, be sure to use the removing/mounting jig.
Mounting the LM block without using the removing/mounting jig may cause rolling elements to fall from the LM block due to contamination by foreign material, damage to internal components or slight inclination. Mounting the LM block with some of the rolling elements missing may also cause damage to the LM block at an early stage.
When using the removing/mounting jig, do not incline the jig and match the ends of both LM rails.
If any of the rolling elements falls from the LM block, contact THK instead of using the product.
Note that the removing/mounting jig is not included in the LM Guide package as standard. When desiring to use it, contact THK.

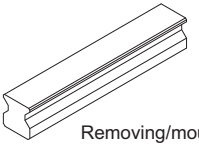

Removing/mounting Jig
(Material: ABS resin)

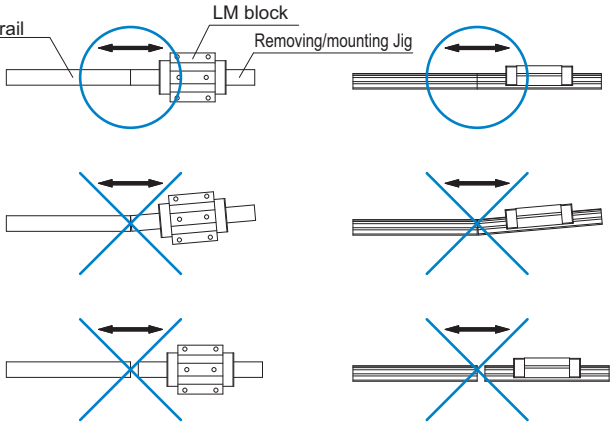

End Piece EP

For those models whose balls may fall if the LM rail is pulled out of the LM block, an end piece is attached to the product to prevent the LM block from being removed from the LM rail.
For models that can use the end piece, see the table below.
If removing the end piece when using the LM Guide, be sure that the LM block will not overshoot.
The end piece can also be used as a fixing jig for a steel tape, and is available also for the LM rail of models SSR, SR and HSR.

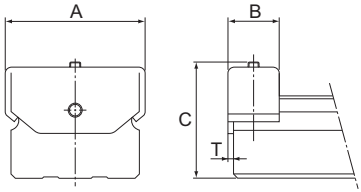

Fig.1 End Piece EP for Models NR/NRS

Model Number Coding

Model number configurations differ depending on the model features. Refer to the corresponding sample model number configuration.

[LM Guide]

- **Models SHS, SSR, SVR/SVS, SHW, HSR, SR, NR/NRS-X, NR/NRS, HRW, JR, NSR-TBC, HSR-M1, SR-M1 and HSR-M2**

SHS25 LC 2 QZ KKHH C0 +1200L P Z T -Ⅱ

- SHS25: Model No.
- LC: Type of LM block
- 2: No. of LM blocks used on the same rail
- QZ: With QZ Lubricator
- KKHH: Contamination protection accessory symbol (*1)
- C0: Radial clearance symbol (*2)
  - Normal (No symbol)
  - Light preload (C1)
  - Medium preload (C0)
- +1200L: LM rail length (in mm)
- P: Accuracy symbol (*3)
  - Normal grade (No Symbol)/High accuracy grade (H)/Precision grade (P)
  - Super precision grade (SP)/Ultra precision grade (UP)
- Z: With steel tape
- T: Symbol for LM rail jointed use
- -Ⅱ: Symbol for No. of rails used on the same plane (*4)

(*1) See contamination protection accessory on A1-494. (*2) See A1-70. (*3) See A1-75. (*4) See A1-13.

Note) This model number indicates that a single-rail unit constitutes one set. (i.e., required number of sets when 2 rails are used in parallel is 2 at a minimum.)
Those models equipped with QZ Lubricator cannot have a grease nipple. When desiring a grease nipple for a model attached with QZ, contact THK.

[Caged Ball LM Guide]

- **Model EPF**

EPF7M* 16 +55L P M

- EPF7M*: Model No.
- 16: Guaranteed stroke (in mm)
- +55L: LM rail length (in mm)
- P: Accuracy symbol (*1)
- M: Rail material: Stainless steel (standard)

(*1) See A1-85.

Note) *: Stainless steel is the standard material used for LM blocks.
This model number denotes one set consists of an LM block and LM rail.

[Caged Roller LM Guide]

● Models SRG, SRN and SRW

SRG45 LC 2 QZ TTHH C0 +1200L P T -Ⅱ

- SRG45: Model number
- LC: Type of LM block
- 2: No. of LM blocks used on the same rail
- QZ: With QZ Lubricator
- TTHH: Contamination protection accessory symbol (*1)
- C0: Radial clearance symbol (*2)
  Normal (No symbol)
  Light preload (C1)
  Medium preload (C0)
- +1200L: LM rail length (in mm)
- P: Accuracy symbol (*3)
  Precision grade (P)/Super precision grade (SP)
  Ultra precision grade (UP)
- T: Symbol for LM rail jointed use
- -Ⅱ: Symbol for No. of rails used on the same plane (*4)

(*1) See contamination protection accessory on A1-494. (*2) See A1-70. (*3) See A1-75. (*4) See A1-13.

Note) This model number indicates that a single-rail unit constitutes one set. (i.e., required number of sets when 2 rails are used in parallel is 2 at a minimum.)
Those models equipped with QZ Lubricator cannot have a grease nipple. When desiring a grease nipple for a model attached with QZ, contact THK.

[Miniature Type LM Guide]

● Models SRS, RSR and RSR-M1

2 SRS20M QZ UU C1 +220L P M -Ⅱ

- 2: No. of LM blocks used on the same rail
- SRS20M: Model No.
- QZ: With QZ Lubricator
- UU: Contamination protection accessory symbol (*1)
- C1: Radial clearance symbol (*2)
  Normal (No symbol)/Light preload (C1)
- +220L: LM rail length (in mm)
- P: Accuracy symbol (*3)
  Normal grade (No Symbol)/High accuracy grade (H)/Precision grade (P)
- M: Stainless steel LM rail
- -Ⅱ: Symbol for No. of rails used on the same plane (*4)

(*1) See contamination protection accessory on A1-494. (*2) See A1-70. (*3) See A1-75. (*4) See A1-13.

Note) This model number indicates that a single-rail unit constitutes one set. (i.e., required number of sets when 2 rails are used in parallel is 2 at a minimum.)
Those models equipped with QZ Lubricator cannot have a grease nipple. When desiring a grease nipple for a model attached with QZ, contact THK.

[Cross LM Guide]

● Models SCR, CSR and MX

4 SCR25 QZ KKHH C0 +1200/1000L P

- 4: Total No. of LM blocks
- SCR25: Model No.
- QZ: With QZ Lubricator
- KKHH: Contamination protection accessory symbol (*1)
- C0: Radial clearance symbol (*2)
  Normal (No symbol)/Light preload (C1)
  Medium preload (C0)
- +1200/1000L: LM rail length on the X axis (in mm) / LM rail length on the Y axis (in mm)
- P: Accuracy symbol (*3)
  Precision grade (P)/Super precision grade (SP)
  Ultra precision grade (UP)

(*1) See contamination protection accessory on A1-494. (*2) See A1-70. (*3) See A1-75.

Note) Those models equipped with QZ Lubricator cannot have a grease nipple. When desiring a grease nipple for a model attached with QZ, contact THK.

[Separate LM Guides]

● Model HR

2 HR2555 UU M +1000L P T M

- 2: No. of LM blocks used on the same rail
- HR2555: Model No.
- UU: Contamination protection accessory symbol (*1)
- M: Stainless steel LM block
- +1000L: LM rail length (in mm)
- P: Accuracy symbol (*2) Normal grade (No Symbol)/High accuracy grade (H)/Precision grade (P) Super precision grade (SP)/Ultra precision grade (UP)
- T: Symbol for LM rail jointed use
- M: Stainless steel LM rail

(*1) See contamination protection accessory on A1-494. (*2) See A1-75.

Note) One set of model HR means a combination of two LM rails and an LM blocks used on the same plane.

● Model GSR

- LM block

GSR25 T UU

- GSR25: Model number
- T: Type of LM block
- UU: Contamination protection accessory symbol (*1)

- LM rail

GSR25 -1060L H K

- GSR25: Model number
- -1060L: LM rail length (in mm)
- H: Accuracy symbol (*2) Normal grade (No Symbol) High accuracy grade (H) Precision grade (P)
- K: Symbol for tapped-hole LM rail type

(*1) See contamination protection accessory on A1-494. (*2) See A1-75.

- Combination of LM rail and LM block

GSR25 T 2 UU +1060L H T K

- GSR25: Model No.
- T: Type of LM block
- 2: No. of LM blocks used on the same rail
- UU: Contamination protection accessory symbol (*1)
- +1060L: LM rail length (in mm)
- H: Accuracy symbol (*2) Normal grade (No Symbol)/High accuracy grade (H)/Precision grade (P)
- T: Symbol for LM rail jointed use
- K: Symbol for tapped-hole LM rail type

(*1) See contamination protection accessory on A1-494. (*2) See A1-75.

Note) One set of model GSR: This model number indicates that a single-rail unit constitutes one set.

[R Guide]

● Model HCR

HCR25A 2 UU C1 +60 / 1000R H 6 T

- HCR25A: Model No.
- 2: No. of LM blocks used on the same rail
- UU: Contamination protection accessory symbol (*1)
- C1: Radial clearance symbol (*2) Normal (No symbol)/Light preload (C1)
- +60: R-Guide center angle
- 1000R: LM rail radius (in mm)
- H: Accuracy symbol (*3) Normal grade (No Symbol)/High accuracy grade (H)
- 6: Number of LM rail joints used on one axis (*4)
- T: Symbol for LM rail jointed use (*5)

(*1) See A1-494 (contamination protection accessories). (*2) See A1-70. (*3) See A1-75.
(*4) Number of LM rails used on one arc. Contact THK for details.
(*5) When using joined LM rails, the dust prevention seal must be a low-resistance seal (dust prevention code: LL).

[Straight-Curved Guide]

● Model HMG

When 2 rails are used

HMG15A 2 UU C1 +1000L T + 60/150R 6T + 60/300R 6T -Ⅱ

- Model No.
- No. of LM blocks used on the same rail
- Contamination protection accessory symbol (*1)
- Radial clearance symbol: Normal (No symbol)/Light preload (C1)
- Overall linear LM rail length per rail
- Symbol for linear LM rail joint
- Center angle of one inner curved rail
- Radius of inner curved rail
- No. of inner curved LM rails jointed
- Center angle of one outer curved rail
- Radius of outer curved rail
- No. of outer curved LM rails jointed
- Symbol for No. of rails used on the same plane (*2)

(*1) See contamination protection accessory on A1-494. (*2) See A1-13.

Note) This model number denotes one set consists of an LM block and LM rail. (i.e. If you are using 2 shafts, the required number of sets is 2.)
The standard Model HMG does not have a seal.To attach a seal, make sure to specify a straight-curved seal (code: UU).

[LM Guide for Medium-to-Low Vacuum]

● Model HSR-M1VV

HSR15M1R 1 VV C1 +400L P -Ⅱ

- Model No.
- No. of LM blocks used on one rail
- Labyrinth seal symbol (*2)
- Radial clearance symbol (*1)
- LM rail length (in mm)
- Accuracy symbol (*3)
- Symbol for No. of rails used on the same plane (*4)

(*1) See A1-70. (*2) See A1-377. (*3) See A1-75. (*4) See A1-13.

Note1) The radial clearance, maximum LM rail length and accuracy class are equal to that of model HSR.
Note2) With this model, a single-rail unit constitutes one set (i.e., the required number of sets when 2 rails are used in parallel is 2).

[Oil-Free LM Guide for Special Environments]

● Model SR-MS

SR15MSV 1 CS +340L P -Ⅱ

- Model No.
- No. of LM blocks used on one rail
- Radial clearance symbol (*1)
- LM rail length (in mm)
- Accuracy symbol (*2)
- Symbol for No. of rails used on the same plane (*3)

(*1) See A1-70. (*2) See A1-75. (*3) See A1-13.

Note) With this model, a single-rail unit constitutes one set (i.e., the required number of sets when 2 rails are used in parallel is 2).

Notes on Ordering

[Order units]

Note that the number of items that constitute one set differs depending on the type of LM guide. Check the sample model number configurations and the accompanying notes.

● Sample LM guide orders

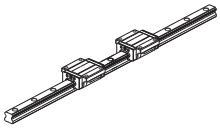

SHS25C2SSC1+640L 1 set

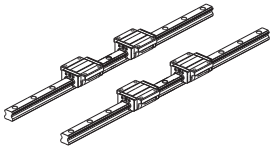

SHS25C2SSC1+640L-Ⅱ2 sets

● Sample model HR orders

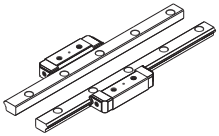

HR2555UU+600L 1 set

● Sample model GSR and GSR-R orders

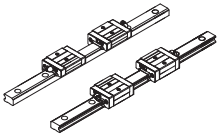

GSR25T2UU+1060L 2 sets

● Sample cross LM guide orders (SCR, CSR and MX)

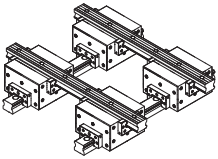

4SCR25UU+1200/1000LP 1 set

● Sample model HMG orders

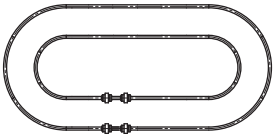

HMG15A 2 UU C1 +1000L T + 60/150R 6T + 60/300R 6T - Ⅱ 2 sets

Note) When ordering model HMG, attach a reference diagram clearly showing the positioning of the LM block and LM rail.

[Mounted orientation and lubrication method]
When placing an order, be sure to let THK know the mounting orientation and the exact position in each LM block where the grease nipple or the piping joint should be attached.
For the mounting orientation and the lubrication, see B1-28 and B24-2, respectively.

[Supported options]
The supported options differ depending on the model number. Check the available options when ordering.
See A1-458.

[Maximum manufactured lengths for LM rails]
Where a high degree of precision is required, limits apply to the maximum manufactured lengths for LM rails. In such situations, contact THK.

Precautions on Using the LM Guide

[Handling]

(1) Please use at least two people to move any product weighing 20 kg or more, or use a dolly or another conveyance. Doing so may cause injury or damage.
(2) Do not disassemble the parts. This will result in loss of functionality.
(3) Tilting an LM block or LM rail may cause them to fall by their own weight.
(4) Take care not to drop or strike the LM Guide. Doing so may cause injury or damage. Giving an impact to it could also cause damage to its function even if the product looks intact.
(5) Do not remove the LM block from the LM rail during setup.
(6) Do not insert hands or fingers into the mounting holes on the LM rail, as they could get caught between the rail and the LM block, resulting in injury.
(7) To ensure personal safety, wear gloves and protective footwear when handling this product.

[Precautions on Use]

(1) Prevent foreign material, such as cutting chips or coolant, from entering the product. Failure to do so may cause damage.
(2) If the product is used in an environment where cutting chips, coolant, corrosive solvents, water, etc., may enter the product, use bellows, covers, etc., to prevent them from entering the product.
(3) Do not use this product if the external temperature exceeds 80℃. Unless the unit is specially designed to be heat-resistant, exposure to such temperatures may deform or damage plastic and rubber parts.
(4) If foreign material such as cutting chips adheres to the product, replenish the lubricant after cleaning the product.
(5) Micro-strokes tend to obstruct oil film to form on the raceway in contact with the rolling element, and may lead to fretting corrosion. Take consideration using grease offering excellent fretting prevention. It is also recommended that a stroke movement corresponding to the length of the LM block be made on a regular basis to make sure oil film is formed between the raceway and rolling element.
(6) Do not use undue force when fitting parts (pin, key, etc.) to the product. This may generate permanent deformation on the raceway, leading to loss of functionality.
(7) If, for operational reasons, it becomes absolutely necessary to remove the LM block from the LM rail and reattach it, a special mounting jig must be used for this purpose. (The mounting jig is not included with standard versions of the product. To obtain one, please contact THK.)
(8) Position the mounting jig so that one end abuts the end of the LM rail. When the rail and the jig are exactly aligned, the LM block can be loaded onto the rail.
(9) Take care to keep the LM block straight. Loading the block at an angle can introduce foreign matter, damage internal components, or cause balls to fall out.
(10) The LM block must contain all its internal rolling elements (balls) when mounted on the LM rail. Using a block with any balls removed may result in premature damage.
(11) Please contact THK if any balls fall out of the LM block; do not use the block if any balls are missing.

(12) If the end plate is damaged due to an accident, etc., balls may fall out or the LM block may become detached from the LM rail and drop. If the LM Guide will be used hanging upside down, take preventive measures such as adding a safety mechanism to prevent falls.
(13) Insufficient rigidity or accuracy of mounting members causes the bearing load to concentrate on one point and the bearing performance will drop significantly. Accordingly, give sufficient consideration to the rigidity/accuracy of the housing and base and strength of the fixing bolts.
(14) When removing the LM block from the LM rail and then replacing the block, an LM block mounting/removing jig that facilitates such installation is available. Contact THK for details.

[Lubrication]

(1) Thoroughly remove anti-rust oil and feed lubricant before using the product.
(2) Do not mix different lubricants. Mixing greases using the same type of thickening agent may still cause adverse interaction between the two greases if they use different additives, etc.
(3) When using the product in locations exposed to constant vibrations or in special environments such as clean rooms, vacuum and low/high temperature, use the grease appropriate for the specification/environment.
(4) When lubricating the product having no grease nipple or oil hole, apply grease directly on the raceway and stroke the product several times to let the grease spread inside.
(5) The consistency of grease changes according to the temperature. Take note that the slide resistance of the LM Guide also changes as the consistency of grease changes.
(6) After lubrication, the slide resistance of the LM Guide may increase due to the agitation resistance of grease. Be sure to perform a break-in to let the grease spread fully, before operating the machine.
(7) Excess grease may scatter immediately after lubrication, so wipe off scattered grease as necessary.
(8) The properties of grease deteriorate and its lubrication performance drops over time, so grease must be checked and added properly according to the use frequency of the machine.
(9) Although the lubrication interval may vary according to use conditions and the service environment, lubrication should be performed approximately every 100 km in travel distance (three to six months). Set the final lubrication interval/amount based on the actual machine.
(10) If the mounting orientation is other than horizontal use, the lubricant may not reach the raceway completely. For the mounting orientation and the lubrication, see B1-28 and B24-2, respectively.
(11) When adopting oil lubrication, the lubricant may not be distributed throughout the LM block depending on the mounting orientation of the block. Contact THK in advance for details.

[Storage]

When storing the LM Guide, enclose it in a package designated by THK and store it in a room in a horizontal orientation while avoiding high temperature, low temperature and high humidity.
After the product has been in storage for an extended period of time, lubricant inside may have deteriorated, so add new lubricant before use.

[Disposal]

Dispose of the product properly as industrial waste.

Precautions on Handling the LM Guide for Special Environment

LM Guide for Medium-to-Low Vacuum

[Handling]

(1) This product has been thoroughly cleaned and degreased and then sealed in moisture-proof packaging. If possible, open the package immediately prior to using the product.
(2) Once the packaging has been opened, store the product inside a clean, dry receptacle accompanied by silica gel or another drying agent. Do not use anti-rust oil or corrosion- or tarnish-preventive paper or fluid with this product.
(3) Wear protective rubber or vinyl gloves while handling this product and make sure the surrounding environment is relatively clean.

Oil-Free LM Guide

[Handling]

(1) The Oil-Free LM Guide is suitable for use at high temperatures, under atmospheric pressure or in a high-vacuum environment of 10^{-6} Pa, and is designed for ultra-low dust emission. It is not intended for use in locations requiring rigidity. Because a preload would affect the strength of its Dry Lubrication S-Compound Film, it does not support preloads.
(2) The product can be used in temperatures ranging from −20 to 150℃.
(3) To ensure proper function of the Dry Lubrication S-Compound Film, use this product in an environment free from condensation, at a humidity level of 40% or less.
(4) This product is not intended for joint use.
(5) Great care must be taken in the installation of the Oil-Free LM Guide, which requires greater precision compared to standard LM Guides.
(6) If the LM block is removed from the LM rail, balls may fall out, and the Dry Lubrication S-Compound Film can be damaged when the block is remounted. If it becomes necessary to remove the LM block from the LM rail, please contact THK.
(7) This product should be stored in a horizontal position, in its original wrapping and package, in a controlled, stable environment free from abnormal high or low temperatures or high humidity. THK recommends storing it at room temperature (25±5℃), with a humidity level of 40% RH or lower and an air-purity level of 10,000 or lower.
(8) This product has been thoroughly cleaned and degreased and then sealed in moisture-proof packaging. If possible, open the package immediately prior to using the product.
(9) Once the packaging has been opened, store the product inside a clean, dry receptacle accompanied by silica gel or another drying agent. Do not use anti-rust oil or corrosion- or tarnish-preventive paper or fluid with this product.
(10) Wear protective rubber or vinyl gloves while handling this product and make sure the surrounding environment is relatively clean.

Precautions on Using Options for the LM Guide

QZ Lubricator for the LM Guide

For details regarding the QZ, see B1-118.

[Precaution on Selection]
Secure a stroke longer than the overall LM block with QZ Lubricator attached.

[Handling]
Take care not to drop or strike this product. This could cause injury or product damage.
Do not block the vent hole with grease or the like.
The QZ device supplies oil only to the raceway, so use it in combination with regular greasing/lubrication. If the product is used in an environment exposed to coolant, cutting chips or other foreign material, oil on the raceway is lost easily. Accordingly, be sure to also use covers, bellows, etc.

[Service environment]
Be sure the service temperature of this product is between –10 to 50℃, and do not clean the product by immersing it in an organic solvent or white kerosene, or leave it unpacked.

Laminated Contact Scraper LaCS, Side Scraper for LM Guides

For details regarding the LaCS, see B1-106. For details regarding the side scraper, see B1-108.

[Handling]
The lubricant impregnated into the scraper is used to increase its sliding capability. For lubrication of the LM Guide, attach QZ Lubricator, or the grease nipple on the side face of the end plate of the LM block, before providing a lubricant.
When using the product, be sure to attach the rail cap C or the plate cover.

[Service environment]
Be sure the service temperature of this product is between -20 to +80℃, and do not clean the product by immersing it in an organic solvent or white kerosene, or leave it unpacked.

[Notes on the Product Functions]
It is specifically designed to provide dust prevention capability to remove foreign material and liquid. To seal oil, an end seal is required.

Light Contact Seal LiCS for LM Guides

For details regarding the LiCS, see B1-110.

[Handling]
The lubricant impregnated into LiCS is used to increase its sliding capability. For lubrication of the LM Guide, attach the grease nipple on the end plate of the LM block before providing a lubricant.

[Service environment]
Be sure the service temperature of this product is between -20 to +80℃, and do not clean the product by immersing it in an organic solvent or white kerosene, or leave it unpacked.
It contacts only with the LM rail raceway. Do not use it in harsh environments.

Cap GC

For details regarding the GC cap, see B1-113.

[Handling]
If GC caps are specified for the product, the edges of the LM rail mounting hole openings will be sharp. Take great care not to injure your fingers or hands while working.
When fitting GC caps, use a flat aligning tool to gradually punch the cap into the hole until it is level with the upper surface of the LM rail. Then run an oil stone over the rail until the upper surface of the rail and the GC caps are completely flat.